Colour Television

Chassis

MG3.2E

AA

Service
Service
Service

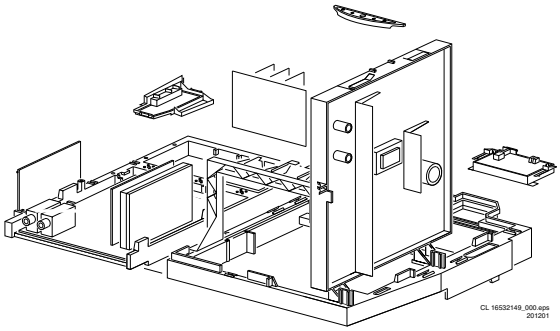

Service Manual

Contents **Page**

1. Technical Specifications, Connections and Chassis Overview 2
2. Safety & Maintenance Instructions, Warnings and Notes 5
3. Directions for Use 7
4. Mechanical Instructions 24
5. Service Modes, Error Codes and Faultfinding 29
6. *Block Diagram, Testpoints, I²C and Supply Voltage Overview*
   - Wiring Diagram 41
   - Block Diagram Supply and Deflection 42
   - Block Diagram Video 43
   - Block Diagram Audio 1 (Excl Wireless Audio) 44
   - Block Diagram Audio 2 (Wireless Audio) 45
   - I²C-IC Overview 46
   - Supply Lines Overview (Part 1) 47
   - Supply Lines Overview (Part 2) 48
   - Testpoint Overviews 49-52
7. *Electrical Diagrams and PWB's*

		Diagram	*PWB*
Line Deflection	(Diagram A1)	53	57-58
Line Deflection (cont.)	(Diagram A2)	54	57-58
Frame Deflection	(Diagram A3)	55	57-58
Audio Amplifiers	(Diagram A4)	56	57-58
Top Supply Panel	(Diagram B)	59	60-61
Mains Switch Panel	(Diagram E)	62	63
CRT / Auto Scavem Panel	(Diagram F)	64	65-66
DC Shift Panel	(Diagram G)	67	67
DAF Panel	(Diagram I)	67	67
Tuner, IF and Video Processing	(Diagram K1)	68	75-88
Input / Output	(Diagram K2)	69	75-88
Sound Processing	(Diagram K3)	70	75-88
Audio Dolby	(Diagram K4)	71	75-88
Videocontrol & Geometrie	(Diagram K6)	72	75-88
Teletext & Control	(Diagram K7)	73	75-88
Source Selection (add to K1)	(Diagram K8)	74	75-88
Feature Box 7	(Diagram L1)	89	92-93
Feature Box 7 Eagle	(Diagram L2)	90	92-93
Feature Box 7 Falconic	(Diagram L3)	91	92-93
Full Dual Screen / PIP	(Diagram M)		
Tuner / IF	(Diagram M1)	94	99-100
Selector Switches	(Diagram M2)	95	99-100
Filter and Buffers	(Diagram M3)	96	99-100
Dual Screen IC and Memory	(Diagram M4)	97	99-100
Audio	(Diagram M5)	98	99-100
Core Top Level	(Diagram NA)	101	118/9
Top-level MCS Module	(Diagram NB)	102	118/9
MCS Module	(Diagr. N1-17)	103	118/9
Side I/O	(Diagram O)	120	121
Top Control	(Diagram P)	122	122
Wireless Surround Transmitter	(Diagram R)	123	124
Auto Scavem	(Diagram SC1)	125	127/8
Auto Scavem PCR	(Diagram SC2)	126	127/8
Wireless Surround Receiver	(Diagram U)	129	130
Active Speaker Box: Amplifier	(Diagram W1)	132	133
Active Speaker Box: SOPS	(Diagram W2)	134	135
Active Speaker Box: Connector	(Diagram W3)	136	136
Active Speaker Box: LED	(Diagram W4)	136	136

8. Alignments 137
9. Circuit Description 146
   - Abbreviation List 152
   - Data Sheets 156
10. Spare Parts List 162

©Copyright 2001 Philips Consumer Electronics B.V. Eindhoven, The Netherlands.
All rights reserved. No part of this publication may be reproduced, stored in a retrieval system or transmitted, in any form or by any means, electronic, mechanical, photocopying, or otherwise without the prior permission of Philips.

Published by CO 0172 Service PaCE Printed in the Netherlands Subject to modification EN 3122 785 11890

PHILIPS

1. Technical Specifications, Connections and Chassis Overview

1.1 Technical Specifications

1.1.1 Vision

Display type	:	CRT, Real Flat WS
Screen size	:	28” (70 cm)
	:	32" (82 cm)
	:	36” (92 cm)
Tuning system	:	PLL
Colour systems	:	PAL: B/G, D/K, I, Plus
	:	SECAM: B/G,D/K,L/L’
	:	NTSC: playback only
Channel selections	:	100 presets
	:	UVSH
Aerial input	:	75 Ω, IEC-type

1.1.2 Sound

Sound systems	:	FM-mono, AM-mono
	:	FM/FM: B/G, Czech
	:	NICAM: B/G, D/K, I, L
Maximum power	:	4 x 20 Wrms (int.)
	:	2 x 15 Wrms (ext.)

1.1.3 Miscellaneous

Mains voltage	:	220 - 240 V
Mains frequency	:	50/60 Hz
Ambient temperature	:	+5 to +45 deg. C
Maximum humidity	:	90 % R.H.
Power dissipation	:	< 200 W
Standby Power dissipation	:	< 350 mW

1.2 Connections

1.2.1 Front Control/Side Connections

Front and Side View

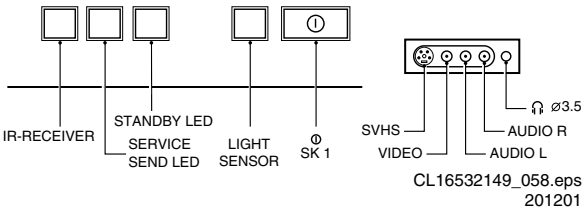

Figure 1-1

SVHS - In

1	-Y	Ground	
2	-C	Ground	
3	-Y	1 Vpp / 75 Ω	
4	-C	0.3 Vpp / 75 Ω	

Cinch - In

1	-CVBS	1 Vpp / 75 Ω	
2	-Audio - L	0.5 Vrms / 10 kΩ	
3	-Audio - R	0.5 Vrms / 10 kΩ	

Mini Jack - Out

-Headphone 32 - 600 Ω / 10 mW

1.2.2 Rear Connections

Connection overview

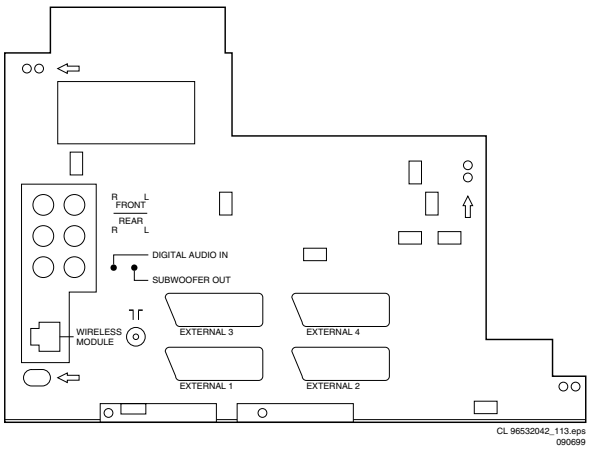

Figure 1-2

Cinch: Front R/L - Out

-Audio - R	0.5 Vrms / 1 kΩ	
-Audio - L	0.5 Vrms / 1 kΩ	

Cinch: Rear R/L - Out

-Audio - R	0.5 Vrms / 1 kΩ	
-Audio - L	0.5 Vrms / 1 kΩ	

Cinch: Digital Audio - In

-S/PDIF

Cinch: Subwoofer - Out

-SW 0.5 Vrms / 1 kΩ

RJ45: Wireless Surround Transmitter - Out

1	-CORDL_L	Signal	
2	-CORDL_L	Ground	
3	-CORDL_R	Signal	
4	-CORDL_R	Ground	
5	-12VP_IN	Supply	
6	-SDA	Signal	
7	-SCL	Signal	
8	-Supply	Ground	

Aerial - In

-IEC-type Coax, 75 Ω

External 1 - In/Out (RGB and CVBS)

SCART connector

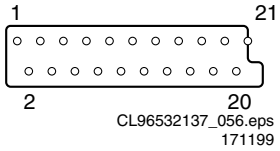

Figure 1-3

1	-Audio - R	0.5 Vrms / 1 kΩ	
2	-Audio - R	0.5 Vrms / 10 kΩ	
3	-Audio - L	0.5 Vrms / 1 kΩ	
4	-Audio	Ground	
5	-Blue	Ground	
6	-Audio - L	0.5 Vrms / 10 kΩ	
7	-Blue	0.7 Vpp / 75 Ω	
8	-CVBS-status	0 - 1.3 V: INT 4.5 - 7 V: EXT 16:9 9.5 - 12 V: EXT 4:3	
9	-Green	Ground	
10	-		
11	-Green	0.7 Vpp / 75 Ω	
12	-		
13	-Red	Ground	
14	-Status	Ground	
15	-Red	0.7 Vpp / 75 Ω	
16	-RGB-status / FBL	0 - 0.4 V: INT 1 - 3 V: EXT / 75 Ω	
17	-CVBS	Ground	
18	-FBL	Ground	
19	-CVBS	1 Vpp / 75 Ω	
20	-CVBS	1 Vpp / 75 Ω	
21	-Shielding	Ground	

External 2 - In/Out for VCR (RGB, Y/C and CVBS)

1	-Audio - R	0.5 Vrms / 1 kΩ	
2	-Audio - R	0.5 Vrms / 10 kΩ	
3	-Audio - L	0.5 Vrms / 1 kΩ	
4	-Audio	Ground	
5	-Blue	Ground	
6	-Audio - L	0.5 Vrms / 10 kΩ	
7	-Blue / C	0.7 Vpp / 75 Ω	
8	-CVBS-status	0 - 1.3 V: INT 4.5 - 7 V: EXT 16:9 9.5 - 12 V: EXT 4:3	
9	-Green	Ground	
10	-Easy Link	(P50)	
11	-Green	0.7 Vpp / 75 Ω	
12	-		
13	-Red	Ground	
14	-Status	Ground	
15	-Red / C	0.7 Vpp / 75 Ω	
16	-RGB-status / FBL	0 - 0.4 V: INT 1 - 3 V: EXT / 75 Ω	
17	-CVBS	Ground	
18	-FBL	Ground	
19	-Y / CVBS	1 Vpp / 75 Ω	
20	-Y / CVBS	1 Vpp / 75 Ω	
21	-Shielding	Ground	

External 3 - In (CVBS, Audio)

1	-		
2	-Audio - R	0.5 Vrms / 10 kΩ	
3	-		
4	-Audio	Ground	
5	-	Ground	
6	-Audio - L	0.5 Vrms / 10 kΩ	
7	-		
8	-CVBS-status	0 - 1.3 V: INT 4.5 - 7 V: EXT 16:9 9.5 - 12 V: EXT 4:3	
9	-	Ground	
10	-		
11	-		
12	-		
13	-	Ground	
14	-Status	Ground	
15	-		
16	-		
17	-CVBS	Ground	
18	-CVBS	Ground	
19	-		
20	-CVBS	1 Vpp / 75 Ω	
21	-Shielding	Ground	

External 4 - In (CVBS, Audio)

1	-		
2	-Audio - R	0.5 Vrms / 10 kΩ	
3	-		
4	-Audio	Ground	
5	-	Ground	
6	-Audio - L	0.5 Vrms / 10 kΩ	
7	-		
8	-CVBS-status	0 - 1.3 V: INT 4.5 - 7 V: EXT 16:9 9.5 - 12 V: EXT 4:3	
9	-	Ground	
10	-		
11	-		
12	-		
13	-	Ground	
14	-Status	Ground	
15	-		
16	-		
17	-CVBS	Ground	
18	-CVBS	Ground	
19	-		
20	-CVBS	1 Vpp / 75 Ω	
21	-Shielding	Ground	

1.3 Chassis Overview

PWB Location

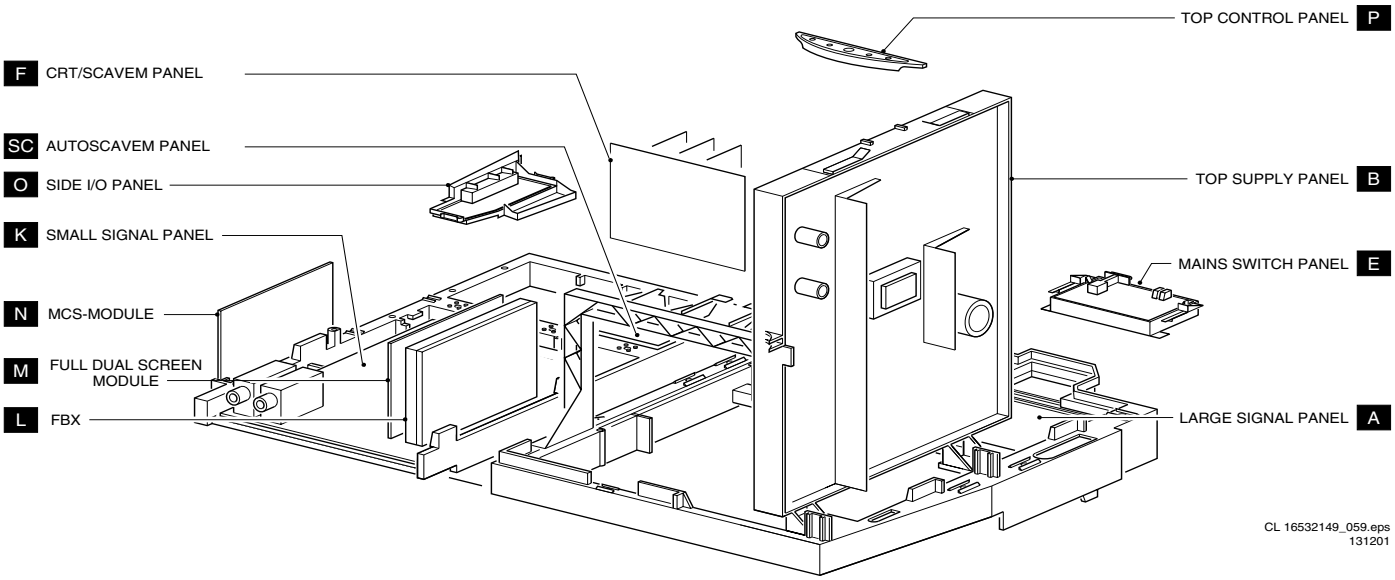

Figure 1-4

2. Safety and Maintenance Instructions, Warnings, and Notes

2.1 Safety Instructions

Safety regulations require that **during** a repair:
- Connect the set to the mains via an isolation transformer, as there are 'hot' parts in this chassis.
- Replace safety components, indicated by the symbol ▲, only by components identical to the original ones. Any other component substitution (other than original type) may increase risk of fire or electrical shock hazard.
- Wear safety goggles when you replace the CRT.

Safety regulations require that **after** a repair, you must return the set in its original condition. Pay, in particular, attention to the following points:
- General repair instruction: as a strict precaution, we advise you to re-solder the solder connections through which the horizontal deflection current is flowing. In particular this is valid for the:
  1. pins of the line output transformer (LOT).
  2. fly-back capacitor(s).
  3. S-correction capacitor(s).
  4. line output transistor.
  5. pins of the connector with wires to the deflection coil.
  6. other components through which the deflection current flows.

Note: This re-soldering is advised to prevent bad connections due to metal fatigue in solder connections, and is therefore only necessary for television sets more than two years old.
- Route the wire trees and EHT cable correctly and secure them with the mounted cable clamps.
- Check the insulation of the mains cord for external damage.
- Check the strain relief of the mains cord for proper function, to prevent the cord from touching the CRT, hot components, or heat sinks.
- Check the electrical DC resistance between the mains plug and the secondary side (only for sets that have an isolated power supply). Do this as follows:
  1. Unplug the mains cord and connect a wire between the two pins of the mains plug.
  2. Turn on the main power switch (keep the mains cord unplugged!).
  3. Measure the resistance value between the pins of the mains plug and the metal shielding of the tuner or the aerial connection of the set. The reading should be between 4.5 MΩ and 12 MΩ.
  4. Switch the TV 'off' and remove the wire between the two pins of the mains plug.
- Check the cabinet for defects, to prevent the possibility of the customer touching any internal parts.

2.2 Maintenance Instructions

We recommend a maintenance inspection carried out by qualified service personnel. The interval depends on the usage conditions:
- When a customer uses the set under normal circumstances, for example in a living room, the recommended interval is three to five years.
- When a customer uses the set in an environment with higher dust, grease, or moisture levels, for example in a kitchen, the recommended interval is one year.
- The maintenance inspection includes the following actions:
  1. Perform the 'general repair instruction' noted above.
  2. Clean the power supply and deflection circuitry on the chassis.
  3. Clean the picture tube panel and the neck of the picture tube.

2.3 Warnings

- In order to prevent damage to ICs and transistors, avoid all high voltage flashovers. In order to prevent damage to the picture tube, use the method shown in Fig. 2-1, to discharge the picture tube. Use a high voltage probe and a multi-meter (position V_{DC}). Discharge until the meter reading is 0 V (after approx. 30 s).

Discharge Picture Tube

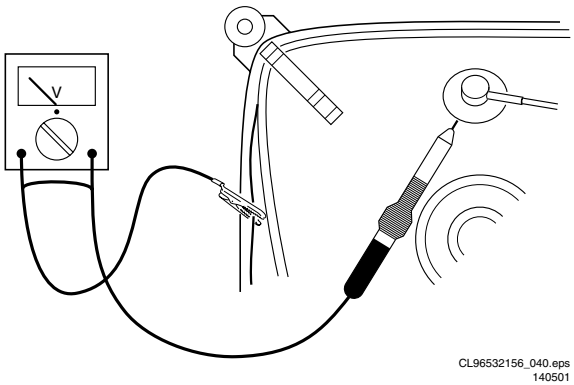

Figure 2-1

- All ICs and many other semiconductors are susceptible to electrostatic discharges (ESD, symbol ⚡). Careless handling during repair can reduce life drastically. Make sure that, during repair, you are connected with the same potential as the mass of the set by a wristband with resistance. Keep components and tools also at this potential. Available ESD protection equipment:
  – Complete kit ESD3 (small tablemat, wristband, connection box, extension cable and ground cable) 4822 310 10671.
  – Wristband tester 4822 344 13999.
- Together with the deflection unit and any multi-pole unit, flat square picture tubes form an integrated unit. The deflection and the multi-pole units are set optimally at the factory. We do not recommend adjusting this unit during repair.
- Be careful during measurements in the high voltage section and on the picture tube.
- Never replace modules or other components while the unit is 'on'.
- When you align the set, use plastic rather than metal tools. This will prevent any short circuits and the danger of a circuit becoming unstable.

2.4 Notes

- Measure the voltages and waveforms with regard to the chassis (= tuner) ground (⏚), or hot ground (⏚), depending on the tested area of circuitry.
- The voltages and waveforms shown in the diagrams are indicative. Measure them in the Service Default Mode (see chapter 5) with a colour bar signal and stereo sound (L: 3 kHz, R: 1 kHz unless stated otherwise) and picture carrier at 475.25 MHz (PAL) or 61.25 MHz (NTSC, channel 3).
- Where necessary, measure the waveforms and voltages with (⊓) and without (⊓) aerial signal. Measure the voltages in the power supply section both in normal operation (①) and in standby (⏻). These values are indicated by means of the appropriate symbols.
- The picture tube panel has printed spark gaps. Each spark gap is connected between an electrode of the picture tube and the Aquadag coating.

- The semiconductors indicated in the circuit diagram and in the parts lists, are interchangeable per position with the semiconductors in the unit, irrespective of the type indication on these semiconductors.
- Manufactured under license from Dolby Laboratories. ‘Dolby’, ‘Pro Logic’ and the ‘double-D symbol’, are trademarks of Dolby Laboratories.

Dolby PL Symbol

DOLBY SURROUND
PRO • LOGIC

Figure 2-2

Installation

Your remote control

Peripherals p. 31
selection of **EXT1**, **EXT2**, **EXT3**, **EXT4** or **FRONT**
TV, videorecorder (**VCR**), **DVD**, Satellite (**SAT**), **TUNER**, **CD**, **TAPE** or cd-recordable (**CDR**) selection.

switch to standby p. 10

no function
freeze the picture p. 10
hold teletext page p. 26
surround modes p. 10

NEXTVIEW on/off p. 10
OK activate your choice

volume up/down p. 10
sound mute p. 10
P programme selection p. 10

teletext on/off p. 25
main menu on/off p. 13

Colour keys
- select TV channels by theme p. 12
- direct teletext page or subject selection p. 25
- Pixel Plus p. 12

Audio and Video equipment p. 31-32

cursor to select your choice p. 13

on screen info p. 10
P<P previous programme p. 10
-/-- video recorder function p. 10

I-II bilingual choice/sound info p.12
TXT language group selection p. 25

EasyLink p. 12
● **INSTANT** recording

picture format p. 12

Installation p. 5

Teletext p. 26
time display/subpage selection
solution to puzzles
display PDC/VPS code
enlarge

DNR reduce image noise p. 12

Zoom p. 12
zoom on/off

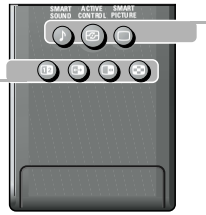

Smart Controls
smart sound p. 11
active control p. 11
smart picture p. 11

Dual Screen p. 18-19
dual screen on
swap screens *(only for 32-36PW9767)*
still picture
multipip p. 11 *(only for 32-36PW9767)*
strobe p. 11 *(only for 28-32PW9617)*

Preparation

1 Place the TV on a solid surface.

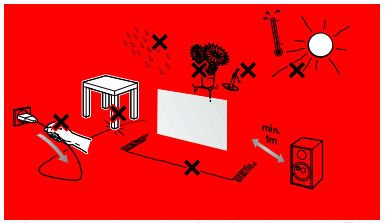

For ventilation, leave at least 5 cm free all around the TV.
Do not place the TV on a carpet.
To prevent any unsafe situations, do not place any objects on top of the TV. Avoid heat, direct sunlight and exposure to rain or water.
Keep mobile telephones at a safe distance to avoid disturbances in picture and sound.

2 Insert the aerial plug firmly into the aerial socket ⊤ at the back of the TV. For best picture quality use the suppressor-aerial cable supplied.

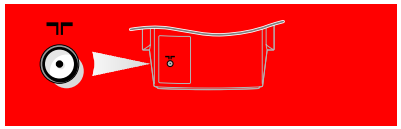

3 Remote control: Remove the cover of the battery compartment.
Insert the 2 batteries supplied (Type R6-1,5V).
Press the **TV** key to be sure your remote control is in the TV mode.

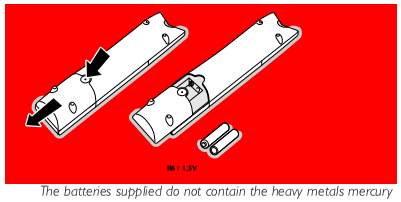

The batteries supplied do not contain the heavy metals mercury and cadmium. Nevertheless in many countries exhausted batteries may not be disposed of with your household waste. Please check on how to dispose of exhausted batteries according to local regulations.

Note: this remote control functions with TVs and other equipment which use the RC6 signalling standard.

4 Wireless surround speaker system.
Supplied and separately packed with your TV are:
- a wireless transmitter module with an integrated cable
- 2 surround loudspeakers
- connection cable

Wireless transmitter module
- Attach the wireless module to the back of the TV as shown.
- Connect the attached cable to the wireless module connector.
Note: Make sure you only switch the TV on after you have plugged in the wireless module.

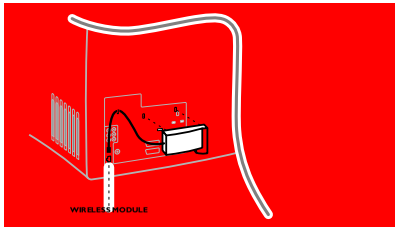

5 Insert the mains plug of the TV in the wall socket having a mains voltage of 220V-240V.
To prevent damaging the mains (AC) cord which could cause a fire or electric shock, do not place the TV on the cord.

6 Switch the TV on : Press the power switch ⏻ on the front of your TV.
A green indicator on the front of the TV lights up and the screen comes on.
If the indicator is red, press the **- P +** keys on the remote control.

The green lamp blinks every time you press a key on the remote control.
*When you switch on your set **for the first time**, the menu **LANGUAGE** automatically appears on the screen. The explanation appears in different languages one at a time. Choose your own language and press the **OK** key on the remote control.*

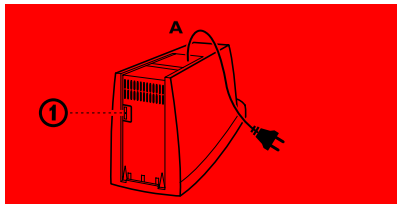

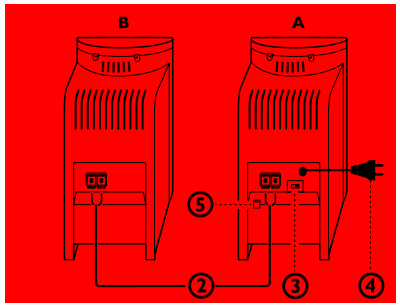

Surround loudspeakers

There are two surround loudspeakers supplied. One is the active loudspeaker A. The other loudspeaker B is a passive one which has to be connected with the active loudspeaker.

- The slide channel switch ① at the bottom of the active loudspeaker has been set default to channel 1 in the factory. See also Sound Setup, p. 9.
- Connect the active to the passive loudspeaker with the supplied speaker cable ②.
  Insert the marked wire into the openings of the same coloured connector clips on both speakers. Do not insert the wires too far.
- The Surround sound loudspeakers can be located behind or to either side of the listener. The front of the loudspeakers do not have to face the listener.
  The distance between the TV and the surround speakers should not exceed 15 m.
  Note: In rare occasions people moving around close to the TV may interfere with the sound transmission.
- Set the position switch ③ to the right if the active loudspeaker is positioned to the right side of the listener, to the left if it is positioned to the left side of the listener (seen from the point of view of watching the TV).
- Connect the active loudspeaker to the mains with the mains cable ④.
- Switch on the active loudspeaker with the **POWER** switch ⑤.
  The red indicator at the front of the active surround speaker shows that the speaker is in standby.
  During sound transmission the indicator turns to green.
  10-15 min. after the sound transmission of the TV has stopped, the indicator turns back to red to indicate the low power standby.
  To switch the active speaker off, use the **POWER** switch.

Keys on top of the TV

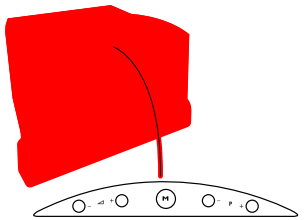

Should your remote control be lost or broken you can still change some of the basic picture settings with the keys on top of the TV.

Press the **M** key repeatedly to select **Volume**, **Brightness**, **Colour**, **Contrast**, **Treble** and **Bass**.
Press the **P** - or + keys to carry out the selected adjustment.
When the menu adjustment is not displayed, the **P-** or **+** keys enable you to select the TV channels, the ◿ - or + keys to adjust the volume.

The selected adjustment automatically switches off when no action has been executed for 10 seconds.

Select the INSTALLATION menu

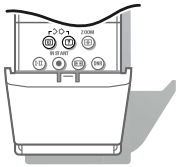

1. Open the door of the remote control.
2. Press ⏻ and ? at the same time.

To use the menus

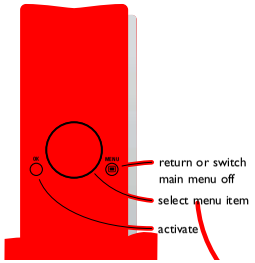

1. Use the cursor in the up/down, left/right directions to select a menu item.
2. Press the **OK** key to activate.
3. Use the ▭ key to return or to switch the menu off.

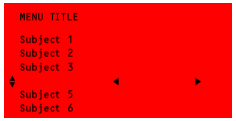

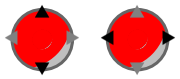

Store TV channels

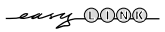

*After the new or extra TV channels have been stored, the TV automatically transfers those TV channels to the video recorder if it is equipped with the EasyLink function. The message **EasyLink : Downloading .....** appears on the screen. The programme list of the video recorder is now the same as the one of the TV. If the TV is connected to a video recorder which supports the NEXTVIEWLink function, the TV also automatically transfers the language and country selections to the video recorder.*

Select the menu language and country

First, select your language and country.

1. Select **Menu language** and press the **OK** key.
2. Select your language and press the **OK** key.
   Use the cursor up/down to scroll through the list and to bring up other languages which are not displayed on the screen at present.
3. Select **Country** and press the **OK** key.
4. Select the country where you are now located and press the **OK** key.
   Use the cursor up/down to scroll through the list and bring up other countries which are not displayed on the screen at present.

   Select **Other** when none of the countries applies.

   You can now search for and store the TV channels in two different ways: using **automatic installation** or **manual installation** (tuning-in channel by channel).
   Select your choice and press the **OK** key.

Automatic installation

In the Automatic Installation menu select **Start** and press the **OK** key to activate the searching. All TV channels are searched for and stored automatically.

```
Automatic installation

                OK
Stop

TV is searching
One moment please ...
```

If a cable system which broadcasts ACI (Automatic Channel Installation) or a TV channel transmitting a teletext page with the frequencies and programme names of all the TV channels which can be received, is detected, the search is stopped and a programme list appears.

The programme list is automatically filled with all the programme numbers and names of the TV channels transmitted.

```
Automatic installation

Start
                OK

 1 BBC1
 2 BBC2
 3 CNN
 ....
 ....
```

It is possible that the cable company or the TV channel displays a broadcast selection menu. Layout and items are defined by the cable company or the TV channel.
Make your choice with the cursor and press the **OK** *key.*

To exit from the menu press the ▭ key on the remote control.

Go on to page 7.

Manual installation

Searching for and storing TV channels is done channel by channel.
You must go through every step of the Manual Installation menu.

Selection mode is only present and lights up if the country selected also offers the channel option (C-channels for aerial, S-channels for cable channels).
You can choose either channel or frequency mode.

```
Manual installation

(Selection mode)
                OK
Programme no.
Search
Fine tune
Store
```

1. Select the TV system
   Select the country or part of the world from where you want to receive the TV channel.
   If you are connected to a cable system, select your country or part of the world where you are now located.
2. Press the cursor down and enter the programme number with the digit keys.
3. Search for a TV channel
   Press the cursor left/right.
   The frequency or the channel number increases until a TV channel is found.

   Direct selection of a TV channel
   If you know the frequency, the C- or S-channel number, enter it directly with the digit keys 0 to 9.
   Ask for a list from your cable company or dealer, alternatively consult the Table of frequencies on the inside backcover of this handbook.
4. Fine tune
   In case of poor reception, you can improve the reception by adjusting the frequency with the cursor left/right.
5. To store your TV channel, select **Store** and press the **OK** key.

   Repeat steps 1 to 5 to store another TV channel.
6. To exit from the menu press the ▭ key on the remote control.

Give name

It is possible to change the name stored in the memory or to assign a name to a TV channel which has not yet been entered. A name with up to 5 letters or numbers can be given to the programme numbers 0 to 99. For example SUPER, BBC1,...
Between 99 and 0 you can also name any peripherals that are connected to a euroconnector.

```
INSTALLATION

Menu language
Country

Automatic installation
Manual installation

Reshuffle
Favourite programmes

SETUP
```

```
Give name

 EXT1
 EXT2
 EXT3
 EXT4
 FRONT

 1 BBC1
 2 BBC2
 3 ....
 4 ....
 5 ....
```

1. Select **Give name** in the **INSTALLATION** menu and press the **OK** key.
2. Select the programme number.
3. Press the **OK** key.
4. Select the character with the cursor up/down.
5. Select the following position with the cursor right.
6. Select the following character.
7. Press the **OK** key when finished.
8. Press the ▭ key to return to the **INSTALLATION** menu.

   Space, numbers and other special characters are located between Z and A.

Reshuffle the programme list

According to your preference you **can** change the order of the stored TV channels.

```
Reshuffle

 EXT1
 EXT2
 EXT3
 EXT4
 FRONT
 0

 2 BBC2
 3 ....
 4 ....
 5 ....
```

1. Select **Reshuffle** in the **INSTALLATION** menu and press the **OK** key.
2. Select the programme number you want to exchange.
3. Press the **OK** key.
4. Select the new number you want to exchange it with.
5. Press the **OK** key.
   Repeat the operation until all TV channels are allocated as you like.
6. Press the ▭ key to return to the **INSTALLATION** menu.

Select Favourite TV channels

After leaving the installation you can browse through the TV channels by pressing the **- P +** keys. Only those TV channels which are in the favourite list will be displayed. Non-favourite TV channels can still be selected with the digit keys. By default all stored TV channels are added to the favourite list.

```
Favourite programmes

 0 ...          No
 1 ...          Yes

 3 ....         No
 4 ....         Yes
 5 ....
```

1. Select **Favourite programmes** in the **INSTALLATION** menu and press the **OK** key.
2. Select your favourite programme number.
3. Select **Yes** or **No** with the cursor left/right.
4. Repeat for every TV channel you want to make a favourite or a non-favourite TV channel.
5. Press the ▭ key to return to the **INSTALLATION** menu.

In order for NEXTVIEW to function properly, the first TV channel from the favourite list should also broadcast the correct local date and time via teletext.

Install TV Setup

The Setup menu allows you to adjust initial settings, i.e. those which are not related to the installation of the TV channels.
The Setup menu contains items that control the settings of the TV's functions, features, services and peripherals you may have connected.

1. Use the cursor in the up/down, left/right directions to select the menu item.
2. Use the **OK** key to activate.
3. Use the key to return or switch menu off.

```
INSTALLATION

Menu language
Country

Automatic installation
Manual installation
Give name
Reshuffle
Favourite programmes
```

```
SETUP

Sound setup
Decoder/Descrambler
Picture tilt
Information line
Factory settings
NEXTVIEW provider          none, 0...99
Auto format                     yes/no
INSTALLATION
```

Digital sources
See Connect Peripheral Equipment, p. 29 to connect your digital equipment, like a DVD, a digital satellite tuner or a similar digital device.

Sound Setup
See p. 9.

Decoder/Descrambler programme numbers
If a decoder or a descrambler is connected, see p. 27, you can define one or more programme numbers as decoder programme numbers.

```
Decoder/Descrambler

Decoder status
```

Press the cursor left/right to select the input used to connect to your decoder **Off**, **EXT1** or **EXT2**.
Select **Off** if you do not want the selected programme number being activated as a decoder programme number.

Select **EXT2** *when the decoder is connected to your EasyLink video recorder.*
When selecting the decoder, the message ***EasyLink: Downloading Presets....*** *appears on the screen.*

Picture tilt
Select **Picture tilt** with the cursor up/down.
Keep the cursor left/right pressed to adjust the rotation of the picture.

Information line
Select **On** and after the selection of a TV programme or after pressing the key on the remote control, a TV channel which broadcasts teletext may transmit the name of the TV channel, the programme name or another message. This is displayed on screen next to information about sound, picture format and DNR setting.
When selected **Off**, only sound, picture format and DNR information is displayed after the selection of a TV channel or after pressing the key.

Factory settings
Select **Factory settings** and press the **OK** key to restore picture and sound settings, predefined in the factory.

Auto format
Selecting **Yes** causes the screen to automatically fill as much of the picture as possible when TV programmes are not carrying special signals detecting the correct screen format.
With the key on the remote control you can still select other picture formats. See p. 12.

NEXTVIEW provider
Most broadcasters in Europe are offering teletext pages containing the day's programme schedule. These pages can be requested by switching the TV to Teletext Guide.
An increasing number of broadcasters are offering an extended programme guide service called NEXTVIEW.
NEXTVIEW is a new way of presenting programme schedules and offers more features than basic teletext.
With NEXTVIEW it is possible to show for instance all the movies or children programmes for tonight or the following days.

If you select **None** as NEXTVIEW provider, the TV will capture all data from the available TV channels which broadcast NEXTVIEW. Broadcaster defined menus will not be available.
If you select a programme number of a TV channel stored in the favourite list as NEXTVIEW provider, the selected TV channel will provide NEXTVIEW data and additional information of its own broadcasts as well as from other (non selected) TV channels.
Normally you will select the NEXTVIEW provider that transmits most information in your language. You can make the best selection via information from TV announcements or from the newspapers.

Important:
In order for NEXTVIEW to function properly, the first TV channel from the favourite list should also broadcast the correct local date and time via teletext.
Please check at startup if the time and date are correct in the NEXTVIEW screen.

Remark:
Not all TV channels support NEXTVIEW.
How to make use of NEXTVIEW, see p. 20.

Sound Setup menu

```
Sound setup

Auto Surround
Wireless Surround
Extra front speakers
Distance to front
Distance to rear
```

Auto Surround
Sometimes the broadcaster transmits special signals for Surround Sound encoded programmes.
The TV automatically switches to the best surround sound mode when **Auto Surround** is switched **On**.
However it is possible to overwrite this setting.

Wireless Surround
The system has already been configured in the factory to work properly.
In rare circumstances, interference from external RF (wireless) equipment such as RF headphones, mobile phones or remote controls for lights, may occur. Then it may be necessary to shift to another wireless channel.
Use the cursor left/right to select another channel.
Important:
Always be sure that the active surround speaker and the Wireless Surround setting are switched to the same transmitting channel. Otherwise no sound or only a distorted sound will be heard on the surround speakers.

When the TV is tuned to a channel in the neighbourhood of 864 MHz (433 MHz in case you purchased a TV with a typenumber in the range 28-32PW9617/01 or /58 or 32-36PW9767/01 or /58), the transmitter is switched off because no RF surround sound is possible. This is necessary to avoid interfered picture. You can improve the picture quality by using the suppressor aerial cable supplied.

In rare cases, when no RF surround sound is possible or when there is too much interference, use the wired back up solution with a 3.5 mm stereo jack. In this case select **Off** in the Wireless surround menu item. See Connect Peripheral equipment, p. 28.

Extra front speakers
See Connect Extra loudspeakers, Amplifier, p. 30.
If no extra front speakers/amplifier are connected, do not change the predefined factory setting which is **No (TV)**.

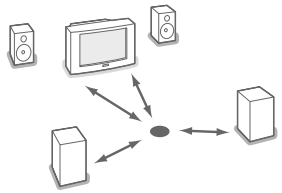

Distance to front
Select the distance between the TV and the place you sit to watch TV.

Distance to rear
Select the distance between the rear surround speakers and the place you sit.

To exit from the menu press the key repeatedly.

Operation

Use of the remote control

Select peripherals
Press this key repeatedly to select **EXT1**, **EXT2**, **EXT3**, **EXT4** or **FRONT**, according to where you connected the peripherals (p. 31).

TV VCR DVD SAT TUNER CD TAPE CDR
Press one of these keys to use the remote control directly in the TV, video recorder, DVD or satellite mode. A green indicator lights up. Press the same key again within 3 seconds to use the remote control in the mode indicated below the key (tuner, CD, tape or CD-recordable).
A red indicator lights up.
Press the key again to return to the function mentioned above the key.

no function

Video recorder see p. 31

NEXTVIEW on/off see p. 20

OK Press this key to activate your choice, when in the menus.

Screen information
Press for 5 seconds to activate/de-activate the extended or reduced display of TV channel and programme information on the screen.
Press briefly to display information about the selected TV channel and programme, the sound reception, picture settings, the selected DNR setting and the remaining time set with the sleeptimer.

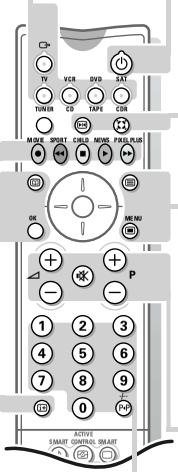

Standby
The set is switched off and the red indicator (orange when acquiring NEXTVIEW information) lights up. When acquiring NEXTVIEW the TV is switched to full standby after a period of max. 1 hour and the red indicator lights up.
To switch the TV on again, press **- P +** or the digit keys.
If your EasyLink video recorder has the system standby function and you press the standby key for 3 seconds, both the TV and video recorder are switched to standby.

Freeze
To activate/de-activate the frozen picture and to hold a teletext page.

Surround mode
Press this key repeatedly to select another available surround mode: Dolby Pro Logic, 3D Surround, Dolby 3 Stereo, Stereo, Hall or Dolby Digital.

Teletext on/off see p. 25

Main menu on/off see p. 13

Volume
Press + or - to adjust the volume.

Mute
Temporarily interrupt the sound or restore it.

P Programme selection
To browse through the TV channels activated in the Favourite Programme menu.

0/9 Digit keys
To select a TV channel.
For a two digit programme number, enter the second digit within 2 seconds.
To switch immediately to a selected one digit TV channel, keep the digit key pressed a bit longer.

Previous programme
The previously selected TV channel is displayed.
The -/-- indication is only for video recorder.

Active control
Active control is a pro-active and automatic system. The TV continuously measures and corrects all incoming signals in order to provide the best picture possible. Thanks to the Ambient Light Sensor which measures the light conditions of the room in which the TV is situated, the contrast, dynamic contrast, brightness and colour picture settings are adjusted automatically. The light sensor is active when the Active control function is switched to Medium (if provided) or Maximum. Press the key repeatedly to select the Active Control values Off, Minimum, Medium (if provided) or Maximum.
Off Sharpness and Dynamic Contrast are controlled automatically
Minimum Sharpness, Dynamic Contrast and Noise Reduction are controlled automatically.
(**Medium** Dynamic Contrast, Colour, Sharpness and Noise reduction are controlled automatically.)
Maximum Contrast (if provided), Dynamic Contrast, Colour, Sharpness and Noise reduction are controlled automatically.
Press the cursor in the up/down directions while the selected Active Control setting information is on top of the screen.
The Active Control menu appears.
The picture settings are being adapted continuously and automatically.
The menu items cannot be selected.
Colour enhancement (green enhancement, skintone correction and blue stretch) is switched on with certain Smart Picture selections.
Press the cursor in the up/down directions again to switch off the menu.

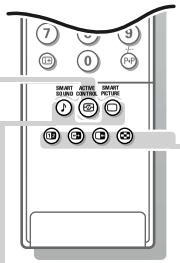

For 32-36PW9767

Dual screen see p. 18

Multipip
Press to switch on Multipip.
A menu line **MOSAIC** appears.
Select the desired function with the cursor left/right and press the **OK** key.
Scan: a scan of the TV channels placed in the favourite list is performed.
Press the **OK** key again to have the continuation of the list.
Photo Finish: the main picture is displayed in successive frozen pictures.
Press the **OK** key again to have a new sequence of frozen pictures.
Strobe: the picture is reproduced image by image.
Press the **OK** key again to have a faster speed.
Press to switch off multipip.

For 28-32PW9617

Dual screen see p. 19

no function

Strobe
Press this key to reproduce the picture image by image.
Press the key again to have a faster speed.
Press the again to switch off the strobe function.

Smart Keys
To select predefined picture and sound settings.

Smart Sound
Each time it is pressed, a different sound setting is selected, corresponding with specific factory settings of treble and bass.

Smart Picture
Each time it is pressed, a different picture setting is selected, corresponding with specific factory settings of Contrast, Colour, Sharpness, Dynamic Contrast and Colour enhancement.

Personal refers to the personal preference settings of picture and sound selected in the picture and sound menu.

Remark: the moment you are in a predefined smart sound or picture setting and you modify a setting in the picture or sound menu, all values of the menu will overwrite the previously made settings.

I-II Bilingual choice and sound mode selection

Press this key
- to switch from **Stereo** to **Mono** sound, in case of stereo transmission, or from **Nicam Stereo** to **Nicam available**, in case of digital transmission;
- to choose between language I (Dual I) or language II (Dual II), in case of bilingual transmission. The setting is separately stored for each TV channel.

Instant record

If your video recorder has the EasyLink function the **INSTANT** ● key for record can be operated in the TV mode.

Picture format

Press this key repeatedly to select another picture format: 4:3, Movie Expand 14:9, Movie Expand 16:9 with or without subtitling, Wide Screen, Super zoom or Automatic (when Auto format is set to Yes in the **SETUP** menu).
Auto format makes the picture to fill the screen as much as possible.
Sometimes also video recorder programmes carry special signals which will automatically switch the TV to the correct screen format.
Auto format is disabled when in Dual screen.
When in Automatic, Movie Expand 14:9 or 16:9 or Super zoom picture format you can make subtitles visible with the cursor up/down.

DNR Dyn. Noise Reduction

To reduce the image noise and improve picture quality when receiving weak signals.
Press the DNR key to select **Off**, **Minimum**, **Medium** or **Maximum.**

Switching Pixel Plus demo on/off

Press the **PIXEL PLUS** key.
The TV screen is divided into 2 parts:
- in the left part Pixel Plus and Digital Natural Motion switched off;
- in the right part Pixel Plus and Digital Natural Motion switched on.

Press the **PIXEL PLUS** key again to switch the Pixel Plus demo off.

Select TV channels by theme

If programmes in the TV guide of NEXTVIEW have defined themes, it is possible to quickly select TV programmes with the coloured keys.

Press the red, green, yellow or blue key to select one of the four predefined theme categories **MOVIES**, **SPORTS**, **CHILDREN**, **NEWS**.
The TV switches to the first TV channel broadcasting a programme of the selected theme. At the same time a list of all the TV channels currently transmitting a programme of the selected theme appears on the screen.
Use the cursor up/down to select a programme.
Press the same colour key again to remove the list.

Time display

The time, downloaded from the TV channel (with teletext) stored on programme number 1 or the lowest favourite programme number, is displayed on the screen.

This function is not available when continuous subtitles have been switched on.

Teletext functions see p. 26

Zoom

Press the **ZOOM** key repeatedly to select one of the zoom magnifications (x1, x4, x9, x16). Additionally you can shift the selected zoom window over the screen with the cursor.
Press to activate/de-activate the continuous display of the zoom magnification.
The zoom window is reset after: selecting another TV channel, another picture format or when another picture format is selected automatically.
Zooming is disabled in Dual screen mode.

Use of the menus

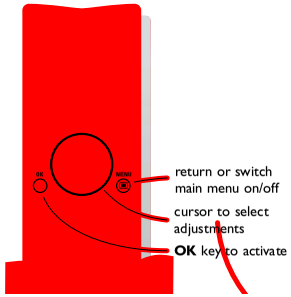

1. Press the key to display/cancel the **MAIN MENU**.
2. Use the cursor in the up/down directions to select the **PICTURE**, **SOUND** or **FEATURES** menu or to select **PROGRAMMES**.
3. Press the cursor right to activate the selected menu.
4. Use the cursor in the up/down, left/right directions to select the menu item.
5. Use the **OK** key to activate.
6. Press the key repeatedly to return or to switch the menu off.

Picture menu

```
MAIN MENU

SOUND
FEATURES
PROGRAMMES
```

```
PICTURE

Brightness
Colour
Sharpness
Colour enhancement
Tint
Digital options
Dynamic Contrast
```

If an NTSC peripheral is connected to one of the euroconnectors, the option Hue also appears.

Colour enhancement

When activated, this feature automatically controls skin tone correction, green enhancement and blue stretch. It makes the colours more vivid.
Select **On** or **Off** in order to activate/de-activate Colour enhancement.

Tint

Select the colour temperature: **Normal**, **Warm** or **Cool**.

Digital options

Although Pixel Plus is the most ideal setting, it may be preferable, dependent on your own preference, to select Double lines ,or 100 Hz Digital Scan.

- **100 Hz Dig. Scan** = 100 Hz + Dig. Scan (Field and line flicker reduction) without motion compensation.
- **Pixel Plus** = creates near High Definition performance inside the TV on the basis of a regular input signal.
  The number of lines are increased and the number of pixels on a line are doubled in combination with Digital Natural Motion.
  As such Pixel Plus enhances both regular broadcast signals and DVD or Digital TV input towards unparalleled sharpness and depth, near High Definition and natural detail.
- **Double Lines** = provides for a doubling of vertical resolution which adds astonishing sharpness and a total absence of visible picture lines.
  Motion compensation reduces jitter and offers smooth, yet sharp motion reproduction.

Note:
Pixel Plus is not active when Multi screen (Strobe), Teletext (Except when Subtitling is activated), NEXTVIEW or Teletext Dual screen is selected.

Dynamic Contrast

To make the contrast in the darker and the brighter picture areas more noticeable, select the **Med** setting.
In certain circumstances it may be preferred to select **Min**, **Max** or **Off**.

The modified adjustments for Contrast, Brightness, Colour, Sharpness, Colour enhancement, Tint, Digital options and Dynamic Contrast are automatically stored for all TV channels.
Select **Factory settings** in the Setup menu to restore the predefined factory settings, see p. 8.

Sound menu

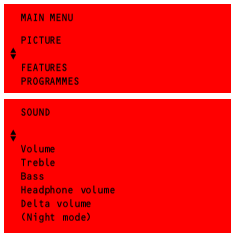

The modified adjustments for Volume, Treble and Bass are automatically stored for all TV channels.
Select **Factory settings** in the Setup menu to restore the predefined factory settings, see p. 8.

Select **Surround settings** in the Sound menu.

The contents of the Surround settings menu depends on the selected Surround modes.

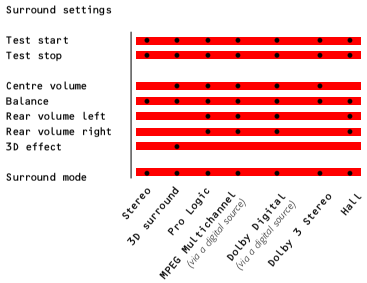

The graphical representation of the speakers is displayed on screen when controls are being changed or when in test tone mode.
The drawing on screen is updated according to the chosen loudspeaker setup and the selected surround mode.
Speakers which are active are highlighted.
In 3D surround mode the graphical representation of the rear loudspeakers is replaced by the symbol))) (((.
The menu item **3D effect** appears and the level of the 3D effect can be adjusted.

Note: if extra front speakers are connected and selected in the Sound Setup menu, all internal TV speakers produce centre sound. See Connect Peripheral Equipment, Extra loudspeakers/Amplifier, p. 30.

Adjustment of the volume level of the loudspeakers

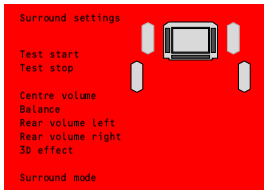

The menu item **Test** enables you to have a reference of the internal and the rear loudspeakers loudness.

1. Select **Test start** and press the **OK** key.
A steady noise tone is switched sequentially through the available loudspeakers, for 2 seconds each. This enables you to have a reference of the loudness of each loudspeaker and to adjust the level of each until they all sound equally loud.
The loudspeakers activated light up in the screen graphic.
2. Select **Centre volume**, **Balance**, **Rear volume left** or **right** and alter the selected adjustments.
3. Select **Test stop** and press the **OK** key when you have finished the adjustment of the speaker levels.

Headphone volume
See Connect Peripheral Equipment, p. 28 for the connection of the headphone.

Delta volume
Here you may adjust the volume differences of each selected TV channel or external device separately. This can compensate volume differences between different broadcasters.
Use the **- P +** keys to compare to the volume of other TV channels or externals.

Night mode *(only available with certain Dolby Digital sound sources)*
Select **Yes**, to reduce the dynamics of the sound and to improve listening at low volume.
This is useful for late-night listening, e.g. to a DVD disc.

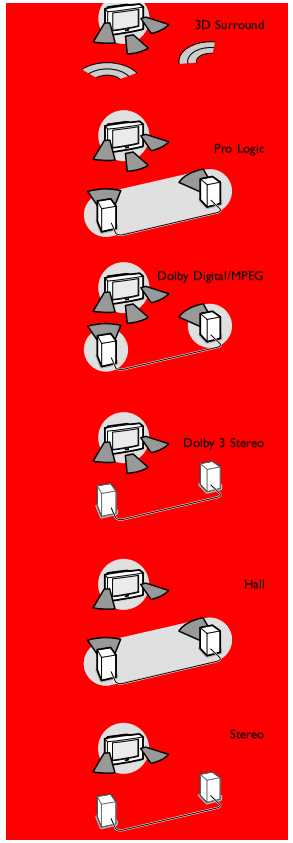

Surround Modes
Select the Surround mode according to the sound mode being broadcast.

3D Surround (optimal with Dolby Surround broadcasting)
3D Surround enables you to experience the effect of Dolby Surround Pro Logic without the need of having rear speakers connected or activated.
With Dolby Digital or MPEG Multichannel an improved virtual effect is offered.
The graphical representation of the rear loudspeakers is replaced by the symbol))) (((.
Select the level of **3D effect** with the cursor left/right.

Pro Logic (with Dolby Surround broadcasting)
In addition to the left and right internal speakers, the centre and the rear surround loudspeakers reproduce the Dolby Surround Pro Logic sounds.
This sound is always present in the movie or programme marked with ▯▯ Dolby Surround.
This mode is especially recommended for such programmes or movies.
Dolby Pro Logic signals are also present on some DVD tracks.
Note: Normal stereo broadcast is not always encoded to produce a rear surround sound.

Dolby Digital* or MPEG Multichannel
When you have connected a DVD player or a Laser Disc player containing a Dolby Digital decoder (AC-3) or MPEG 2 decoder output (See Connecting Peripherals, Digital equipment, p. 29), you can enjoy Multichannel Surround Sound in your home when playing discs recorded in Dolby Digital or MPEG2.
In addition to the left and right internal speakers, the centre, the left and right rear surround loudspeakers and the subwoofer reproduce the Dolby Digital or Dolby MPEG 5-channel Surround sounds.
Select Dolby Digital or MPEG Multichannel Surround mode.

Dolby 3 Stereo (optimal with Dolby Surround broadcasting)
The sound signal is now distributed over the front left, the front right and the centre TV loudspeakers.
The rear loudspeakers do not produce any signal.

Hall
The special sound signal is distributed over the rear loudspeakers which creates a hall effect from the rear.
The centre loudspeaker does not reproduce any signal.
This mode is recommended when you wish to add surround sound to a broadcast which is not encoded Dolby Surround or to a mono signal.

Stereo
This mode reproduces only the left and right front sound signals.
You only hear a stereo sound if the broadcast which you are receiving is transmitted in stereo or nicam stereo.

Manufactured under license from Dolby Laboratories. 'Dolby' 'Pro Logic' and the double-D symbol ▯▯ are trademarks of Dolby Laboratories.
Confidential Unpublished Works. © 1992-1997 Dolby Laboratories, Inc.
All rights reserved.

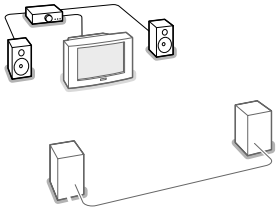

With two extra front loudspeakers connected

To enhance the sound reproduction of your TV you may connect two extra front loudspeakers via an external amplifier. See Connect Peripheral Equipment, Extra loudspeakers/Amplifier, p. 30
In the Surround modes, Hall and Stereo **(+ amp)** is added to indicate that you should switch on your amplifier as in these modes the internal TV speakers do not produce any sound.
The subwoofer output is muted.

Note: If extra front speakers are connected and selected, all internal TV speakers produce centre sound in the surround modes Pro Logic, Dolby 3 Stereo, Dolby Digital, and MPEG.

Press the ▣ key to return to the **SOUND** menu.

Dolby Digital sound reception info via the [i+] key

Press the [i+] key.
When Dolby Digital sound is reproduced, the sound info on screen displays the number of loudspeaker signals which are transmitted.
This is indicated by 2 numbers: the first one indicates the number of front loudspeaker signals, the second one the number of rear loudspeaker signals.
E.g. 'Dolby Digital 3/2' means that 3 front signals are transmitted: left, right and centre, and 2 rear signals: left and right surround.
'Dolby Digital 1/0' means that a mono signal is transmitted.
'Dolby Digital 2/0' means that the transmission contains a stereo signal which can be Dolby Pro Logic encoded.
In this case the surround mode will display Dolby Pro Logic.

Features menu

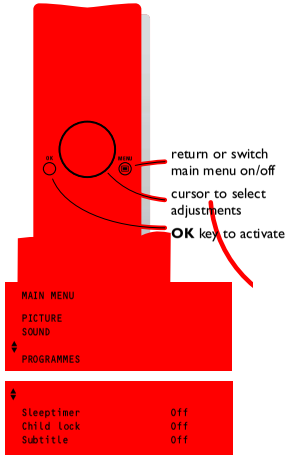

1. Press the ▣ key to display/cancel the **MAIN MENU**.
2. Use the cursor in the up/down directions to select the **FEATURES** menu.
3. Press the cursor right to activate the selected menu.
4. Use the cursor in the up/down directions to select a menu item.
5. Use the cursor in the left/right directions to select the desired setting.

Sleeptimer
With the sleeptimer you can set a time period after which the TV should switch itself to standby.
The counter runs from **Off** up to **180 min.**
One minute before the TV is set to go to standby, the remaining seconds appear on screen. Not visible in dual screen mode. You can always switch off your set earlier or change the set time.

Child lock
If the child lock is on, the TV can only be switched on with the remote control. The **P** - and + keys on top of the TV cannot be used to select a TV channel. In this way you can prevent unauthorised use of your TV.
If the message **Child lock On** appears, the child lock must be switched off before you can use the **P** - and + keys on top of the TV to select a TV channel.

Subtitle
TV channels with teletext often transmit certain programmes with subtitling. See Teletext, Continuous Subtitles, p. 26 how to select the proper subtitle page from the teletext index.
Select **Subtitle On** or **Off**.

Press the ▣ key to switch off the Features menu.

Programme list

1. Press the ▣ key to display/cancel the **MAIN MENU**.
2. Select **PROGRAMMES** with the cursor up/down.
3. Press the cursor right to activate and to display an overview of all the TV channels installed.
4. Press the cursor up/down to run through the list and press **OK** to select the desired TV channel.

Press the ▣ key to switch off the Programme list.

Dual screen *Only for 32-36PW9767*

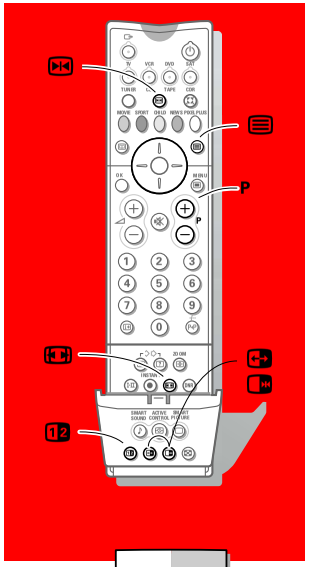

1. Press the key to switch on Dual screen.
   The TV screen is divided into 2 parts:
   - the left side for the picture of the selected TV channel;
   - the right side for the picture from the TV channel in the favourite programme list following on the selected TV channel.
2. Press the key under the door of the remote control to select a vertical squeezed or a non vertical squeezed picture size.

Select left and right pictures

1. Press **+ P -** to run through the TV channels in the left picture.
2. Press the cursor up/down to select the TV channels in the right picture.
   Also TV channels which are not in the favourite list may be selected.
   Press the cursor left/right to select peripheral equipment connected to **EXT1**, **EXT2**, **EXT3**, **EXT4** or **FRONT**.
   - *Selecting TV channels in the right picture with the cursor up/down is not possible when a menu is displayed on the screen.*
   - *Programmes via a decoder/descrambler can not be reproduced in the right picture.*
   - *The sound of the right picture can be heard via a headphone. Only programmes via a peripheral can be heard in stereo.*
   - *Zooming is reset to 1x when Dual screen is switched on.*

Swapping screens

Press the key to swap the right and left picture. The sound is swapped as well.

Select still picture

- Press the key to freeze the left picture.
- Press the key to freeze the right picture.

Possible Dual screen combinations

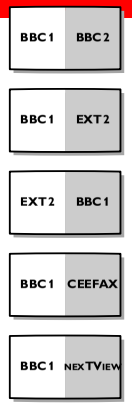

- TV channel/TV channel: see Select left and right pictures.
- TV channel/Peripheral: see Select left and right pictures.
- Peripheral/TV channel
  - Select the connection (**EXT1**, **EXT2**, **EXT3**, **EXT4** or **FRONT**) of the connected peripheral.
  - Press the key.
- TV channel/Teletext
  - Press the key to display teletext of the selected TV channel.
  - Press the key.
    To operate teletext, see p. 25.
    The **+ P -** keys can only be used to run through the teletext pages.
  - Press the key again to return to a full screen picture or press the key again to return to a full teletext picture.
- TV channel/NEXTVIEW
  - Press the key to display NEXTVIEW.
    Press the key.
    To operate NEXTVIEW, see p. 20
  - Press the key again to return to a full screen picture or press the key again to return to a full NEXTVIEW picture.

Dual screen *Only for 28-32PW9617*

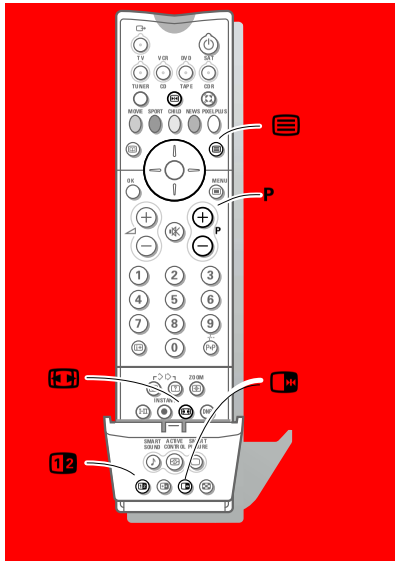

1. Press the key to switch on Dual screen.
   The TV screen is divided into 2 parts:
   - the left side for the normal main picture,
   - the right side for teletext broadcast by the selected TV channel or for NEXTVIEW.

   To operate NEXTVIEW, see p. 20.
   To operate teletext, see p. 25.

   If Dual screen is **Off**, the picture, teletext or NEXTVIEW is displayed full screen.
2. Press the key under the door of the remote control to select a vertical squeezed or a non vertical squeezed picture size.
3. Press **+ P -**, digit keys or colour keys to run through the teletext pages.
4. Press the key to return to a full picture screen and to select another TV channel with the **+ P -** keys or with the digit keys.

Select still teletext picture

Press the key to freeze the teletext picture.
The info in this page is not being updated by the teletext broadcaster.

NEXTVIEW / Teletext guide

In the Setup menu, p. 8 you were asked to select a NEXTVIEW provider.
If the selected provider supports NEXTVIEW then the TV will automatically present the NEXTVIEW programme schedule. If the TV channel supports just teletext, then the TV will switch automatically to Teletext guide.
Both facilities are offering the same functions: record, remind, info and watch. However in case of Teletext guide the broadcaster is responsible for the availability of these functions.

Some broadcasters provide information about their own programmes and sometimes other TV channels for one or more days. You can search for the programmes you want to watch up to 7 days in advance. It is also possible to search for a programme by theme, e.g. sport, movie, etc. Once a programme has been selected it can be tagged, to remind you, or to record on the video recorder automatically (provided the video recorder is equipped with NEXTVIEW Link), once, daily, weekly or series.
Teletext guide/NEXTVIEW also allows direct access to detailed information about programmes if provided by the broadcaster.

The broadcaster is responsible for the content of the information.
The TV is responsible for the capture of that information and for the presentation to the user.

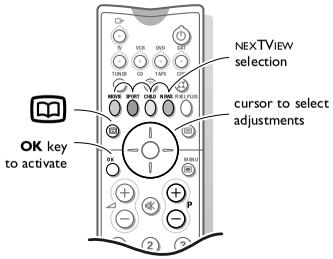

Use of the Teletext guide/NEXTVIEW menus

1. Press the key on the remote control to display/cancel the Teletext Guide/ NEXTVIEW menu.
2. Use the cursor in the up/down, left/right directions to select the date, **DAY** for the daily guide and the time block (in steps of 15 minutes), **CHANNEL** for the channel guide, **THEME** for the theme guide, **OVERVIEW** for an overview of all the programmes which are marked as reminders or for recording, the programme guide page number or to enter the programme list.

Teletext guide

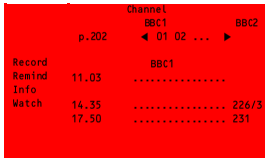

NEXTVIEW

3. Enter the proper programme guide page number with the digit keys or with the **– P +** keys.
4. Press the cursor left/right to run through the subpages.
5. Select a programme with the cursor up/down.
6. Press one of the colour keys to select one of the basic functions (if available); **record**, **remind**, **watch**, **info**. See Basic functions further on.
7. Press the **OK** key to return to the header area again.

3. Select a programme with the cursor up/down.
4. Press one of the colour keys to select one of the basic functions (if available); **record**, **remind**, **watch**, **info**. See Basic functions further on.
5. Press the **OK** key to return to the header area again.

Teletext guide

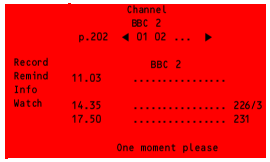

TV channels which broadcast teletext also transmit a page with the programme guide of the day. For each selected TV channel the programme guide page can be selected with the key:
- automatically if the selected TV channel supports services like PDC (Programme Delivery Control) or MIP (Magazine Inventory Page).
- if automatic pre-selection is not possible then the index page is displayed and the proper programme guide page number of the selected TV channel has to be entered with the digit keys.

The programme guide page will be stored automatically only if it satisfies Video Programming via Teletext (VPT) requirements.

Every time you press the key, the programme guide page of the selected TV channel will be available if the TV channel does not support NEXTVIEW.

The function items record, remind, info and watch, corresponding with the coloured keys, become highlighted if the displayed programme page satisfies the Video Programming via Teletext (VPT) requirements. Select a programme item and press one of the function keys, e.g. Record or Remind. See Basic functions further on.
The Info item is enabled if the selected programme contains a page number with an optional subcode referring to a page with more info about the programme.

NEXTVIEW modes to sort and represent information

Menu
If in the Setup menu, see p. 8, you have selected a TV channel as NEXTVIEW provider which also supports NEXTVIEW, NEXTVIEW menu is displayed or can be selected. The selected TV channel is responsible for this menu.
The NEXTVIEW menu appears when NEXTVIEW is switched on.
Use the cursor up/down to select a menu item.
Use the cursor right to select the menu item.
While going through the menus, the TV is collecting the sorting criteria to finally display a list of programme events. The functions, in the left column, are shown at reduced brightness as long as the menu is displayed.
If **None** has been selected as NEXTVIEW provider in the Setup menu, the broadcaster's defined menu will not be available.

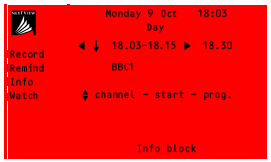

Day
The day guide provides an overview of all programme titles active in the selected time block. Time blocks are 15 minute intervals starting from the current time of the current day. The default order is based on the programme list of the favourite TV channels as stored in the installation of the TV. TV channels not marked as favourite TV channels will not appear.
Default NEXTVIEW opens with the day screen if the broadcast does not have its own menu.

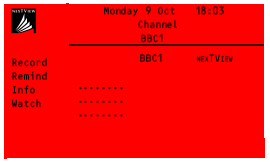

Channel
The Channel guide provides an overview of all programmes that are broadcast by a single channel during one day.
Previous programmes can be made visible via cursor up.
The list will start with the earliest broadcast programme.
With cursor left/right another favourite TV channel can be selected.

Theme
The theme guide displays a list of all programmes at the selected date, that matches with the selected category (news, sport, culture, movies, …).
The default starting item will be the current or next programme on the current TV channel.
The **THEME** selection is only present if programmes in the TV guide have defined themes.

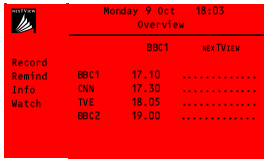

Overview
The Overview menu provides a list of programmes that are marked as reminders and those that have to be recorded.
When more than one programme to be recorded has an overlap in time, these programmes will be marked by a red colour.

After the programme has been broadcast, all items set for once will be deleted from the list the following day. This menu can be used to change a reminder or programmes to be recorded.

Note: the TV will automatically interpret the broadcast time (as shown on the teletext guide) of your selected programme into the correct local time and date.

Basic functions

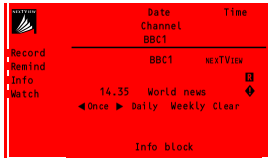

The functions Record, Remind, Info and Watch can be activated with the corresponding colour keys on the remote control.
If the function is not available, then the text is shown at reduced brightness.
Select a programme with the cursor up/down.

Record R or Remind

1. Press the red colour key to activate **Record** or the green colour key to activate **Remind.**
   If the programme number of the broadcaster is not yet known, a message appears with the request to input the correct programme number with the cursor left/right and press OK.
   A small menu pops up in which you can choose the interval: once, daily or weekly, or clear an earlier made record or remind setting. The default interval is set to **Once**. If a programme is an episode of a series, it is identified by the system and the options **daily** and **weekly** are replaced by the option **series**. In this case the system identifies when the next episode of the series will be broadcast. This is not possible in the Teletext guide.
2. Use the cursor in the left/right directions to select the interval.
   The colour of the tag refers to the interval.
3. Press the **OK** key.

When **Record R** is activated:
Storing appears to indicate the video recorder is programmed.
When **Remind** is activated:
- a message will appear on the screen the moment the tagged programme with starts, when watching the TV later on.
- the TV switches on the moment the tagged programme with starts, when the TV is in standby.

Note: Recordings and reminders are not possible when the broadcaster does not transmit dates and times of the programmes.
*The message **No TV programming possible** appears.*
Make sure you are on the TV programming page.

Info

1. Press the yellow colour key to activate **Info**.
   Advertisements or information relating to the selected programme are displayed. In some cases all of the information does not fit on the screen. Use the cursor up/down to browse through all of the information.
2. Press the yellow colour key again to switch off the information.

Watch
Press the blue colour key to activate **Watch**.
This function is only available if a currently broadcast programme is selected. Otherwise the function is not available.
The selection causes the TV to tune to the selected TV channel. NEXTVIEW is switched off.

Select Picture/NEXTVIEW-Teletext Guide

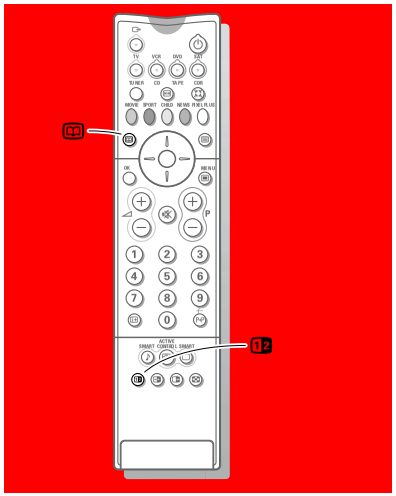

Press the key.
Press the key.
The screen is divided into two parts: the left side for the normal main picture, the right side for NEXTVIEW/Teletext Guide.
Press the key to return to a full NEXTVIEW/Teletext guide screen and press the key to return to a full picture screen.

Acquisition and updating of NEXTVIEW info

Acquisition and updating of NEXTVIEW is done when you are watching the TV channel of the selected NEXTVIEW provider, see Setup menu p. 8, or when the TV is switched to standby.
The indicator on the front of the TV remains orange during standby.
After all needed acquisition or updating is complete, it turns red.
Acquisition of fresh data will happen once during the night.

Note: it may be necessary to put the TV in standby mode when all NEXTVIEW information is outdated, e.g. returning from holiday.

Video recorder restrictions with NEXTVIEW

The **Record** item and the automatic recording will only be present and possible if your video recorder is equipped with NEXTVIEWLink.
Your video recorder should be connected to **EXTERNAL 2**. See Connect Peripheral Equipment, p. 27.

The daily, weekly and series options, the number of recordings set and the way overlapping recordings are managed, depend on the type of video recorder you have. When all video recorder timers are full, **No free record timer** appears on the screen.

Upload video recorder overview.
When the TV is switched on, the timer recordings are uploaded to the TV to check if any manual addition or deletions have been done. This is shown in the overview. The video recorder manages and removes timer recordings when performed.

Some NEXTVIEWLink video recorders do not allow a daily programming of the recording to start on a Saturday or Sunday. In this case the item **daily** will be removed from the menu on those days.

Teletext

Most TV channels broadcast information via teletext.
Each channel which broadcasts teletext transmits a page with information on how to use its teletext system. Look for the teletext page with the main index (usually p. 100).
Depending on the TV channel, teletext is transmitted in different systems.
The colours used in the options line correspond with the colour keys of your remote control.

About Easy Text

Easy Text considerably reduces the waiting time (on condition that the teletext broadcast of the particular TV channel is received for at least half a minute) by :

- a direct selection of previous and following pages which are in transmission and of the pages referred to in the options line
- a habit watcher list: frequently used pages are put automatically in a list of preferred pages, so that they are immediately available
- the precapturing of the page numbers referred to in the displayed page
- the precapturing of all the subpages.

Switch Teletext on and off

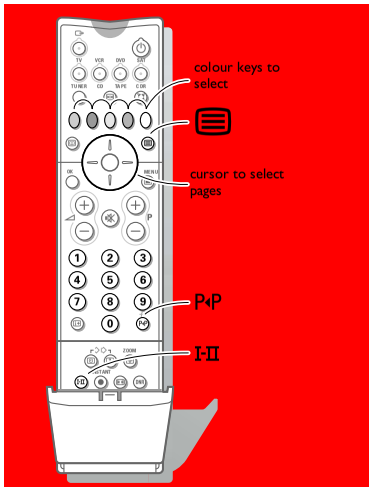

Press to switch the teletext on or off.
The main index page appears on the screen together with two information lines at the top and one option line at the bottom of the screen.

Remark: if the displayed teletext characters on screen do not correspond with the characters used in your language, press the I-II key, under the door of the remote control, repeatedly to select language group 1 or 2.

Select a Teletext page

With the digit keys
Enter the desired page number with the digit keys.
The page counter seeks the page or the page appears immediately when the page number has been stored in the memory.
A message appears when you have entered a non existent or incorrect page number. Page numbers beginning with 0 or 9 do not exist. Choose another number.

With the option line
Select with the colour keys, corresponding to the coloured options at the bottom of the screen, the desired subject.

Select Picture/Teletext

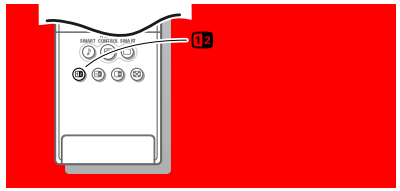

Select a TV channel which broadcasts teletext.
Press the key.
Press the key.
The screen is divided into two parts:
the left side for the normal main picture,
the right side for teletext broadcast by the selected TV channel.
Press the key to return to a full screen picture or press the key to return to a full teletext picture.

Quickly run through the teletext pages

Press the cursor up/down or the **- P +** keys to run through the previous or the following pages.

Select the previously selected txt page

Press the P◂P key.

Select the index teletext page

Press the grey colour key to display the main index (usually p.100).

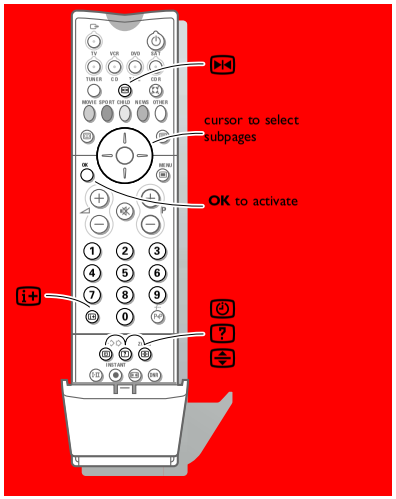

Only for T.O.P teletext broadcasts :
T.O.P orders the pages in categories and adds other possibilities of enhancing ease of use.
Press [i+]. A T.O.P. overview of the teletext subjects available is displayed.
Not all TV channels broadcast T.O.P. teletext. When the teletext system
is not T.O.P. teletext, a message appears at the top of the screen.
Select with the cursor up/down, left/right the desired subject and press the **OK** key.

Select subpages

When a selected teletext page consists of different subpages, one of the subpages appears on the screen.
The coloured number in the first information line refers to the displayed subpage.
The other subpages can be selected in 2 ways :

With the cursor left/right
The other subpage numbers appear in white as soon as the transmission has found them. They are stored in the memory so that they are available while the teletext page is on screen.
Select with the cursor left/right the previous or the following subpage.

With the [⏻] key
• Enter the subpage number yourself:
Press [⏻]. Enter the desired subpage with the digit keys : e.g. 3 for the third page of seven subpages.
The TV searches for the selected subpage.

• Automatically rotating subpages:
Press [⏻] again to cancel the entered digit key for the subpage.
Now the subpages rotate automatically.

Press [⏻] again to select the subpages with the cursor left/right again.

Special teletext functions

Hold
Press [▶|◀] to stop the automatically rotating of the subpages or to stop the page counter from seeking when you have entered a wrong page number or when the page is not available.
Enter another page number.

Enlarge
Press [⇕] repeatedly to display the upper part, the lower part and then to return to the normal page size. When the upper part is displayed, you can scroll the text, line by line using the cursor up/down.

Reveal
Press [?] to reveal/conceal the hidden information, such as solutions to riddles and puzzles.

Select Continuous Subtitles

TV channels with teletext often transmit programmes with subtitling. For each TV channel you can store a subtitle page which will be displayed continuously if the programme being broadcast is transmitted with subtitles.

Switch on teletext and select the proper subtitle page from the index.
Switch off teletext.
Now the subtitle page is stored for the selected TV channel.

Once subtitles have been stored and **Subtitle On** has been selected they will automatically be displayed on the selected TV channel if subtitles are in the transmission.
Select **Subtitle On** or **Off** in the Features menu, see p. 17.
The subtitle symbol [▭] appears when **Subtitle On** is selected.

Remark: you are in teletext mode, so only teletext functions are available.

Connect Peripheral Equipment

There is a wide range of audio and video equipment that can be connected to your TV.
The following connection diagrams show you how to connect them.

Video recorder

Connect the aerial cables ①, ② and, to obtain the optimum picture quality, eurocable ③ as shown below.

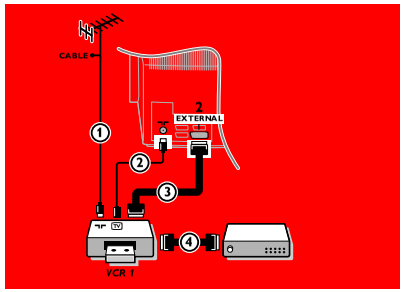

If your video recorder is provided with the EasyLink function, the eurocable supplied with it should be connected to **EXTERNAL 2** *to benefit from the EasyLink functionality.*

If the eurocable ③ is not used the following steps are required:

Search for and store the test signal of the video recorder

1. Unplug the aerial cable ① from the aerial socket ⊤ of your video recorder.
2. Switch on your TV and put the video recorder on the test signal. (See the handbook for your video recorder.)
3. Search for the test signal of your video recorder in the same way as you searched for and stored the TV signals. See Installation, Searching for and storing TV channels, Manual Installation, p. 6.
4. Store the test signal under programme number 0 or between 90 and 99.
5. Replace the aerial cable in the aerial socket ⊤ of your video recorder after you have stored the test signal.

Decoder and video recorder
Connect a eurocable ④ to your decoder and to the special euroconnector of your video recorder. See also the video recorder handbook.
See Define Decoder/Descrambler prog. numbers, p. 8.
You can also connect your decoder directly to **EXTERNAL 1** or **2** with a eurocable.

Video recorder and other equipment
(except Digital Sources)

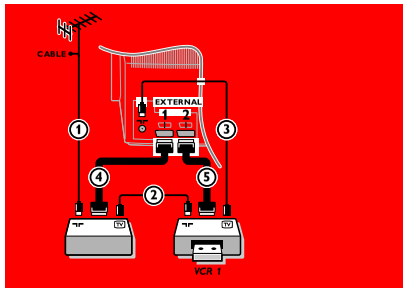

1. Connect the aerial cables ①, ② and ③ as shown. Better picture quality can be obtained if you also connect eurocable ⑤ to **EXTERNAL 2** and a eurocable ④ to **EXTERNAL 1**, 3 or 4.
2. Look for the test signal of your peripheral in the same way as you do for a video recorder.

When a video recorder is connected to EXTERNAL 1 you can only record a programme from your TV.
Only when a video recorder is connected to EXTERNAL 2 it is possible to record a programme from your TV as well as from other connected equipment. See Record with your video recorder, p. 33.

Note: EXTERNAL 1 can handle CVBS and RGB, EXTERNAL 2 CVBS, Y/C and RGB, EXTERNAL 3 and 4 only CVBS.
It is preferred to connect peripherals with RGB output to EXTERNAL 1 or 2 as RGB provides a better picture quality.

Camera & camcorder

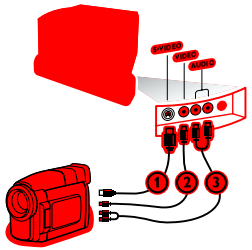

1. Connect your camera or camcorder to sockets at the right side of your TV.
2. Connect the equipment to **VIDEO** ② and **AUDIO L** ③ for mono equipment.
   Press the I-II key repeatedly to select the sound coming from one or both loudspeakers of your TV.
3. For stereo equipment also connect **AUDIO R** ③.

S-VHS quality with an S-VHS camcorder is obtained by connecting the S-VHS cables with the **S-VIDEO** input ① and **AUDIO** inputs ③.

Warning: Do not connect cable ① and ② at the same time. This may cause picture distortion !

Wired rear loudspeakers

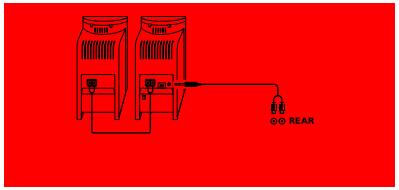

When no wireless RF surround sound is possible or when there is too much interference you can still enjoy Dolby Pro Logic and Dolby Digital surround sound by connecting the two rear loudspeakers to the TV with a stereo cinch to stereo 3,5 mm jack cable.
Connect the (not supplied) cable with the **PRE-AMP IN (TV)** connector at the back of the active surround loudspeaker and with the black and red **REAR R** or **L** outputs at the back of the TV.

Headphone

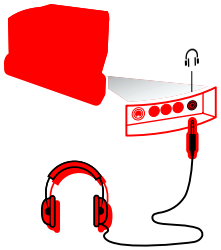

1. Insert the plug into the headphone socket at the right side of the TV.
2. Press on the remote control to switch off the internal loudspeakers of the TV.
   The headphone impedance must be between 8 and 4000 Ohm. The headphone socket has a 3.5 mm jack.

In the **SOUND** menu select **Headphone volume** to adjust the headphone volume.

Digital equipment (DVD, digital Set Top Box,...)

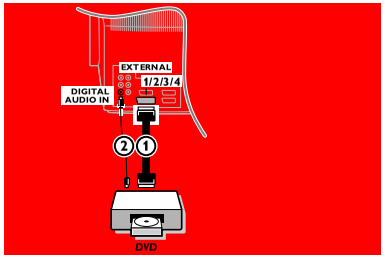

Connect your digital equipment with a eurocable ① to one of the euroconnectors (**EXT1**, **EXT2**, **EXT3** or **EXT4**), or with a cinch cable to the **VIDEO** input at the right side of the TV (see illustration above).

For digital sources with a Dolby Digital (AC-3)/MPEG2 audio output also connect an audio cable ② to the **DIGITAL AUDIO IN** socket of your TV to enjoy MultiChannel surround sound. This is only valid when you have connected your digital equipment to **EXT1**.

1. Press and at the same time.

```
INSTALLATION

Menu language
Country

Automatic installation
Manual installation
Give name
Reshuffle
Favourite programmes
```

```
SETUP

Sound setup
Decoder/Descrambler
Picture tilt
Information line
Factory settings
NEXTVIEW provider          none, 0...99
Auto format                     yes/no
INSTALLATION
```

2. Select **Digital sources** in the Setup menu of the **INSTALLATION** menu and select:
   - **None** if you have no digital source connected,
   - **EXT1**, **EXT2**, **EXT3** or **EXT4** if you have connected your equipment to a euroconnector,
   - **EXT1 + Dig. Audio** if you have connected your digital equipment with a Dolby Digital/MPEG2 audio output to **EXT1** and to the **DIGITAL AUDIO IN** socket,
   - **EXT1**, **2**, **3** or **4** + **Dig. STB** if you have connected your Digital Set Top Box to one of the euroconnectors,
   - **FRONT** in case you connected your equipment to the right side of the TV,
3. Press the key to switch off all menus.

*Note: When you have connected a digital source + Digital audio to **EXT1** and a digital STB to one of the other externals*
1. *Always select **EXT1 + Dig. Audio** in the Digital sources menu.*
2. *When you want to watch digital broadcasts via your Set Top Box, use the key on the remote control, to select the external where the STB has been connected.*
   *In case of poor digital transmission, select the with the **Multimedia** setting using the Smart Picture key, without changing the picture settings manually.*

Other equipment

Other equipment can be connected to one of the remaining euroconnectors.

Connect Extra loudspeakers / Amplifier

Stereo amplifier and two extra FRONT speakers
To enhance the sound reproduction of your TV you can connect two extra speakers via an external amplifier.

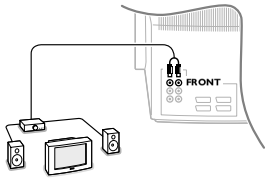

1. Connect the audio cables to the audio input of your amplifier and to **AUDIO FRONT L** and **R** at the back of your TV. The output level is controlled by the volume control of your TV.
   Note: Switch off the TV and your audio amplifier before connecting them. Set the audio amplifier's volume to minimum.
2. Select **Extra front speakers Yes (Amp)** in the Sound Setup menu. See p. 9.
   See Surround settings, p. 15 for the available Surround modes.
3. Adjust the volume of the audio amplifier.
   You may make use of the Test tone function in the Surround Settings menu, see p. 14, to have a reference of the loudness of the separate loudspeakers.
   Note: Once you have adjusted the volume of the amplifier, do not change it while watching TV as the whole configuration operates with the volume adjustment of your TV.

Dolby Pro Logic Surround amplifier
Although your TV is already equipped with a Digital Multichannel decoder you might want to connect your own Dolby Surround amplifier.

1. Connect the Dolby Pro Logic Surround amplifier to the **AUDIO FRONT L** and **R** at the back of your TV.
2. Select **Extra front speakers No** in the Sound Setup menu. See p. 9.
   The audio output is now independent of volume, treble, bass and surround settings.
3. Switch off the volume of the TV with the mute key 🔇.
   All volume settings, tone control and speaker connections have to be done via the external Dolby Pro Logic amplifier.

Attention: the sound info on screen will not correspond with the actual sound reproduction. You will not be able to reproduce multichannel Dolby Digital or wireless surround sound through the AUDIO L and R output of your TV.

Connect extra subwoofer

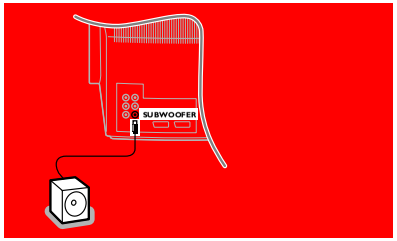

To enhance the sound reproduction of your TV you can connect an externally powered subwoofer.
Connect the audio cable to the **SUBWOOFER OUT** socket of your TV and to the **SUBWOOFER IN** socket of the subwoofer.
The volume of the subwoofer is controlled by the TV. The subwoofer output is muted when the **Extra front speakers** menu item in the Sound Setup menu, p. 9, is switched to **Yes**.
For details, please refer to the subwoofer's manual.

If you want to connect more equipment to your TV, consult your dealer.

To select connected equipment

If the TV is connected to a video recorder with the EasyLink function, in some cases the TV will be switched on, even when it was in standby. (E.g. playback tape,...)
This is not possible when Child Lock On is selected.

Equipment connected with an aerial cable only :
Select the programme number under which you have stored the test signal with the digit keys.

Equipment connected to a euroconnector or to the right side of the TV

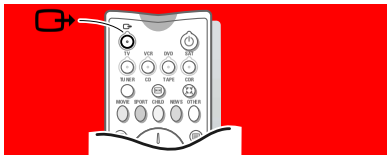

Press the key repeatedly to select **EXT1, EXT2, EXT3, EXT4** or **FRONT**, according to where you connected your equipment at the back or the right side of your TV.
Remark : Most equipment (decoder, video recorder, satellite receiver) carries out the switching itself.

If you want to change to TV channels?
Enter the programme number of the TV channel which you want to watch with the digit keys or press the **TV** key.

Audio- and video equipment keys

Most of the audio and video equipment from our range of products can be operated with the remote control of your TV.

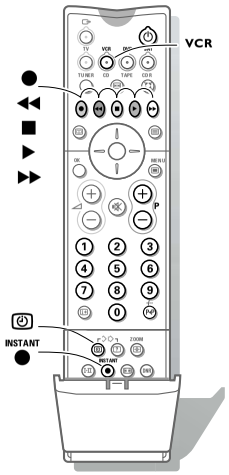

Press the **VCR**, **DVD**, **SAT**, **TUNER**, **CD**, **TAPE** or **CDR** key according to the equipment you want to operate with this remote control. See Use of the remote control, p. 10.

Video recorder
Press one of the video recorder keys after you pressed the **VCR** key:

●	for record,
◀◀	for rewind,
■	for stop,
▶	for play,
▶▶	for fast forward,
-/--	for selecting 1- or 2-digit programme numbers from the videorecorder,
- P +	for sequential programme selection from the video recorder tuner,
0 to 9	to select a programme number from your video recorder tuner,
⏻	to switch the video recorder to standby
⏻	VCR timer

These keys function with equipment which use the RC5 signalling standard.

If your video recorder has the EasyLink function, the key **INSTANT** ● *for recording, under the door of the remote control, can be operated in the TV mode.*
If your EasyLink video recorder has the system standby function, when you press the ⏻ key for 3 seconds, both TV and the video recorder are switched to standby.

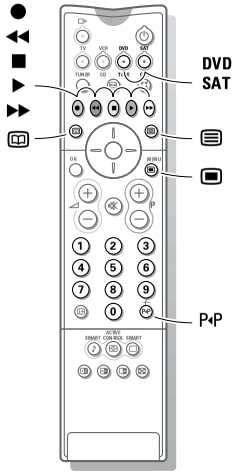

DVD keys
Press one of the following keys after you have pressed the **DVD** key.

- to switch the DVD menu on or off
- P◂P to select a DVD chapter
- to select a DVD title
- to select your choice of subtitle language
- ● pause
- ◀◀ to search down
- ■ stop
- ▶ play
- ▶▶ to search forward
- 0-9 to select a programme number from your DVD
- **OK** to enter the selected menu item

These keys function with equipment which use the RC6 signalling standard and with Philips DVD players.

Satellite receiver keys
Press one of the TV keys after you have pressed the **SAT** key.

These keys function with equipment which use the RC5 signalling standard.

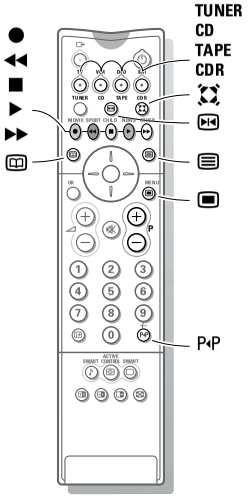

Tuner, CD, Tape and CDR keys
Press one of the following keys after you have pressed the **TUNER, CD, TAPE** or **CDR** key.

- to switch the menu on or off (tuner)
- P◂P to select a frequency (tuner)
- ● to record
- ◀◀ to search down (tuner); rewind (CD/tape); speed down (CDR)
- ■ stop
- ▶ play
- ▶▶ to search up (tuner); forward (CD/tape); speed up (CDR)
- RDS display (tuner); info on screen (CD/CDR)
- RDS news/TA (tuner); disc increment (CD/CDR)
- pause (CD/CDR/tape)
- surround modes (CD/CDR/tape)
- **+ P -** next/previous (CD)

Record with your video recorder without EasyLink

To record S-VHS quality, connect an S-VHS peripheral directly to the video recorder.

Record a TV programme

1. Select the programme number on your video recorder.
2. Set your video recorder to record.
   See the handbook for your video recorder.

Switching programme numbers on your TV does not disturb recording !

Record a programme on your video recorder connected to EXTERNAL 2 from Audio/Video equipment connected to EXTERNAL 1, EXTERNAL 3, EXTERNAL 4 or to sockets on the right side of the TV

1. Switch on the equipment.
2. Select the right external on your video recorder.
3. Set your video recorder to record.
   You record what you are watching on the screen.

Do not switch programme numbers or do not switch off your TV when you are recording !

Record with your video recorder with EasyLink

If you have connected an S-VHS video recorder provided with the EasyLink function, you can record S-VHS quality from an S-VHS peripheral connected to the right side of the TV. (E.g. from an S-VHS camcorder.)

In TV mode, it is possible to start a direct recording of the programme which is being displayed on the TV screen.
Press the **INSTANT** ● *record key, under the door of the remote control.*

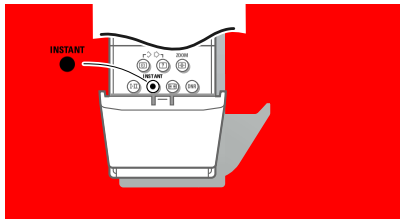

The video recorder switches on from standby and a message of what is being recorded appears on the screen.
The video recorder starts recording the programme you are watching.
Switching programme numbers on your TV does not disturb recording !

When recording a programme from a peripheral connected to EXTERNAL 1, 3, 4 or FRONT, you can not select another TV programme on the screen.
To watch TV programmes again, press the programme number you want to select twice.
Attention: the recording is stopped and your video recorder switches to standby.

If you switch to standby during recording of a programme from a peripheral connected to EXTERNAL 1, 3, 4 or FRONT, the blinking lamp on the front of your TV indicates that you are still recording. The blinking stops after the recording is finished.

Record with your video recorder with NEXTVIEWLink

If your video recorder is equipped with NEXTVIEWLink, and you tagged one or more programmes to be recorded automatically in the NEXTVIEW mode, it is not necessary for the TV to be in the standby mode or switched on for the recording to start.

Tips

Care of the screen
Clean the TV with a slightly damp soft cloth. Do not use abrasive solvent as it can damage the TV screen.

Mobile telephone warning !
To avoid disturbances in picture and sound, malfunctioning of your TV or even damage to the TV, keep away your mobile telephone from the TV.

Poor Picture
- Have you selected the correct TV system?
- Is your TV or house aerial located too close to loudspeakers, non-earthed audio equipment or neon lights, etc.?
- Mountains or high buildings can cause double pictures or ghost images. Sometimes you can improve the picture quality by changing the direction of the aerial.
- Is the picture or teletext unrecognisable? Check if you have entered the correct frequency. See Installation, p. 6.
- Are brightness, sharpness and contrast out of adjustment? Select Factory settings in the Setup menu, p. 8.
- Sometimes poor picture quality is possible when having activated an S-VHS camera or camcorder connected to the right side of your TV and another peripheral is connected to **EXT1**, **EXT2**, **EXT3** or **EXT4** at the same time. In this case switch off one of the other peripherals.

No picture
- Is the aerial connected properly?
- Are the plugs tightly connected in the aerial socket?
- Is the aerial cable in good condition and does it have suitable plugs?
- Are the connection facilities to a possible second TV in good condition? If in doubt, consult your dealer.

No sound
- No sound on any channel? Check the volume isn't at minimum.
- Is the sound interrupted with the mute key 🔇? Check if your speaker configuration corresponds with the selections made in the Sound Setup menu, p. 9. E.g. is your amplifier switched on when you have 2 extra front speakers connected?
- No sound from the rear speakers or the centre speakers? Select an appropriate surround mode, according to the broadcasted sound signal or adjust the volume or check if the wireless transmitter is properly connected. See Surround Modes, p. 15.
- In case you connected digital equipment with a digital audio connection you have to select **EXT1 + dig. audio** in the Sound Setup, Digital sources, p. 29 to reproduce sound.

Remote control
- If your TV no longer responds to the remote control, the batteries may be dead or the wrong mode (TV or other peripheral, see p. 3) is selected.
- You can still use the **M** key and the -/+ keys at the top of your TV.

Menu
Have you selected the wrong menu? Press the same key again to exit from the menu.

NEXTVIEW - No information
See Acquisition and updating of NEXTVIEW information, p. 24.

NEXTVIEW - Displayed time is wrong
The broadcaster on programme number one does not transmit the correct local date en time. Use **Reshuffle** in the **INSTALLATION** menu to place another broadcaster on programme number one.

Wireless Surround speaker system
- Are the active surround speaker and the Surround Sound setting in the Setup menu switched to the same transmitting channel?
- External RF equipment, mobile telephones or people moving around close to the TV may disturb the sound transmission.
- When no RF surround sound is possible, or when there is too much interference, try to switch to another wireless channel or use the wired back up solution. See Install Sound Setup, p. 9.
- When you switch to another wireless channel, take care to select the same transmitting channel as well in the setup menu as on the speaker box.
- For wireless transmitter modules with a built in antenna: direct the antenna to achieve the best reception.

No solution
Switch your TV off and then on again once.
Never attempt to repair a defective TV yourself.
Check with your dealer or call a TV technician.

End of life directives
Philips is paying a lot of attention to producing environmentally-friendly in green focal areas. Your new TV contains materials which can be recycled and reused. At the end of its life specialised companies can dismantle the discarded TV to concentrate the reusable materials and to minimise the amount of materials to be disposed of.
Please ensure you dispose of your old TV according to local regulations.

How to dispose of dead batteries?
The batteries supplied do not contain the heavy metals mercury and cadmium. Nevertheless in many countries dead batteries may not be disposed of with your household waste. Please ensure you dispose of dead batteries according to local regulations.

Index

a ACI, *6*
active control, *11*
auto format, *8*
automatic installation, *6*
auto surround, *9*
b bass, *14*
bilingual broadcast, *12*
c camcorder, *28*
centre volume, *14*
child lock, *17*
colour enhancement, *13*
continuous subtitles, *26*
country, *5*
d decoder/descrambler, *8*
delta volume, *14*
digital options, *13*
digital sources, *29*
DNR, *12*
dolby 3 stereo, *15*
dolby digital, *15*
dolby surround settings, *14*
double lines, *13*
dual screen, *18-19*
DVD keys, *32*
dynamic contrast, *13*
e easy text, *25*
eurocable, *27*
extra front speakers, *9*
f factory settings, *8*
favourite programmes, *7*
fine tune, *6*
freeze, *10*
frequency, *6*
g give name, *7*
h hall, *15*
headphone, *28*
hue, *13*
i info on screen, *10*
information line, *8*
instant recording, *12*
interrupt the sound, *10*
l language, *5*
m manual installation, *6*
menu language, *5*
multipip, *11*
n NEXTVIEW, *20*
NEXTVIEW provider, *8*
nicam, *12*
night mode, *14*
p picture adjustments, *13*
picture format, *12*
picture tilt, *8*
programme list, *17*
Pro Logic, *15*
r recording, *33*
reshuffle, *7*
s satellite receiver keys, *32*
search for TV channels, *6*
setup, *8*
sleeptimer, *17*
smart picture & sound, *11*
sound adjustments, *14*
sound setup, *9*
stereo, *12*
store TV channels, *5*
strobe, *11*
subwoofer, *30*
surround mode, *15*
S-VHS, *32*
switch TV on, *4*
t teletext, *25*
treble, *14*
v video recorder, *27*
volume, *10*
w wireless surround, *9*
z zoom, *12*
3D effect, *14*
3D surround, *15*

Glossary

100 Hz Digital Scan
If you look at a television screen you will see small imperfections in the picture caused by line vibration. Digital Scan (an internal process) removes interline flicker. When combined with 100 Hz, you will see a totally stable image.

Automatic Channel Installation (ACI)
Automatically installs all TV channels in the same order as offered by your cable company, provided of course that the data is transmitted. It also automatically includes programme number and programme name. With ACI, channel installation is fully automatic, simple and fast.

Child Lock
Feature to prevent unauthorised use of your TV.

Digital Natural Motion
100 Hz Digital Natural Motion eliminates the juddering effect that is noticeable when there are moving objects in the picture. This results in razor sharp pictures and ensures smooth movements.

DNR
Digital Noise Reduction.
By encoding signals digitally in 100 Hz sets, it is possible to clean up picture noise. This is especially beneficial in poor signal areas and when viewing poor quality video tapes.

Dolby Digital
The audience is completely surrounded by the sound. Both the left/right/centre and subwoofer speakers and the surround speakers are driven by the digitally processed sound system of the TV.
The Dolby Digital sound contains 6 independent digital channels which results in a CD sound performance from both the front and rear sound channels.

Dolby Surround Pro Logic
Literally wraps you in 4-channel sound. it brings your favourite movies to life with all the realism and impact of cinema sound as though you are part of the action.

Easy Link
Digital 'intelligent' ESI bus-system between TV and VCR (Scart connection required). Turns source selection and control into a one-button operation.

Easy Text
Teletext memory that automatically memorises Teletext pages and gives you instant access to them.

Euroconnector
A 21-pin connector system enabling you to simply connect various types of audio/video and computer equipment.

Menu
On-screen display of functions and facilities in a well-organised survey, which you can select using your remote control.

NEXTVIEW
NEXTVIEW is a new feature to assist the TV and VCR user in selecting the programmes she or he likes to watch from a television programme guide on the screen.
It enables the user to see a description of every programme, and mark interesting programmes to be reminded (auto TV on) or recorded (NEXTVIEWLink video recorder required).

NTSC
The broadcasting system used in the USA, Japan and parts of South America and Southeast-Asia.

Smart Picture and Sound Controls
Keys on the remote control to select predefined picture and sound settings.

Sleeptimer
Function with which you can set a time period after which the TV should switch itself to standby.

Picture Freeze
TV mode which allows you to "freeze" a certain image in order to study a specific detail at ease, e.g. to make notes of certain programme information like phone numbers.

Teletext
See also Easy Text
WST: World Standard Teletext.
FLOF: Full Level one Features. System applied by the BBC, RVE.... that provides a fast access to the teletext pages.
TOP: Table of (Teletext) Pages. German system for an easy access to the teletext pages.

Tint
TV-function to modify the general colour balance between cool and warm and to adjust it according to your personal preference.

4. Mechanical Instructions

Index of this chapter:
1. Set Disassembly
2. Service Positions
3. Board Removal
4. Set Reassembly

Note: Figures below can deviate slightly from the actual situation, due to different set executions.

4.1 Set Disassembly

Follow the disassemble instructions in described order.

4.1.1 Wireless Surround Transmitter Removal (if attached)

Transmitter module

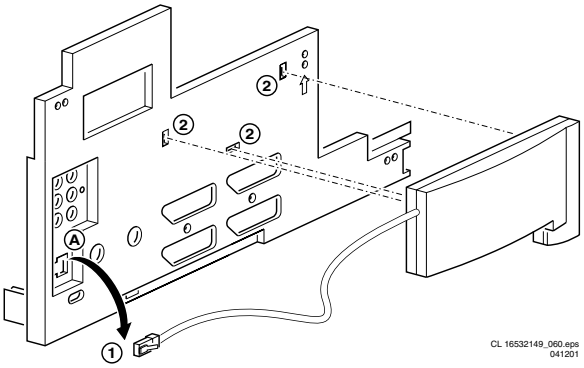

Figure 4-1

1. Remove the cable [1] of the Wireless Surround Transmitter box (at the left side of this RJ45 plug you can find the release-hook of the lock-mechanism).
2. Pull the Wireless Surround Transmitter box backwards. It is clicked to the rear cover via three clamps [2].

4.1.2 Rear Cover Removal

Rear view

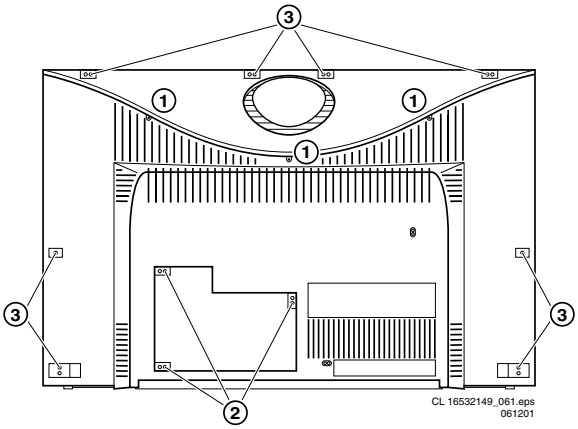

Figure 4-2

Warning: disconnect the mains power cord before you remove the rear cover.

First, remove the top cover (= plate with 'saucer'):
1. Remove the three fixation screws [1] that hold the cover plate.
2. Pull the cover (horizontally) backwards.

To be able to access the electronics of the set, you must remove the rear cover:
1. Remove the three remaining fixation screws [2] of the I/O-cover plate.
2. Remove the remaining fixation screws [3] at the two sides and the top of the rear cover.
3. Now remove the rear cover. Make sure that wires and cables are not damaged during cover removal.

4.1.3 I/O Cover Plate Removal

Cover plate

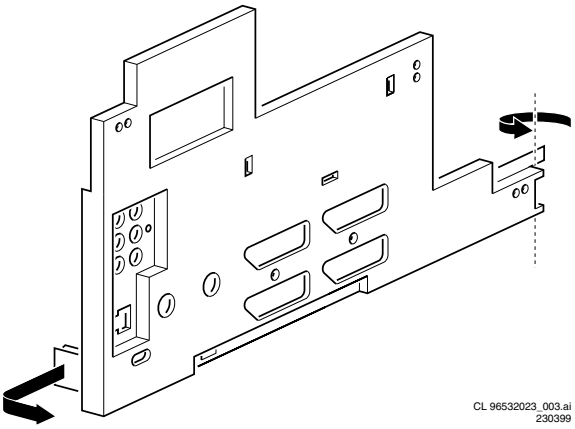

Figure 4-3

It is rather easy to remove the I/O-cover plate:
1. Release the hook on the left side (pull slightly outwards).
2. Now remove the plate (it hinges at the right side).

4.1.4 Sub-woofer Removal

How to remove the sub-woofer:
1. Disconnect the loudspeaker cable at the top of the sub-woofer box.
2. The subwoofer has two rubber feet at the bottom. Behind them, there is a snap hook. Release this hook (pull backwards), and at the same time pull the sub-woofer box upwards.
3. Now remove the sub-woofer.

4.1.5 DAF-module Removal

DAF-bracket

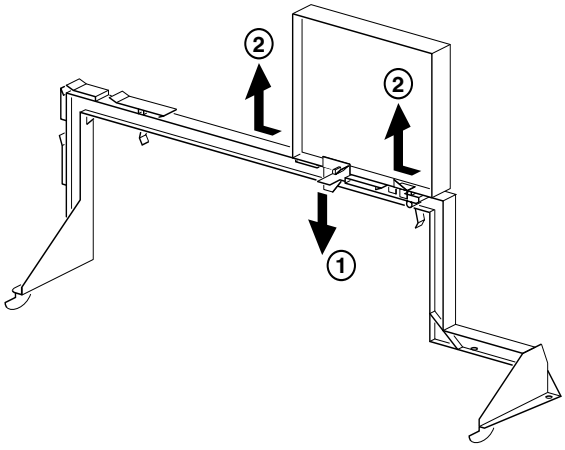

Figure 4-4

How to remove the DAF-module:
1. Press down the snap hook [1].
2. At the same time, slide the complete DAF-module to the left
   Caution: be very careful not to damage the CRT while doing this!.
3. Now lift the module from the LSP top bracket.

4.1.6 Support Brackets Removal

SSP support bracket

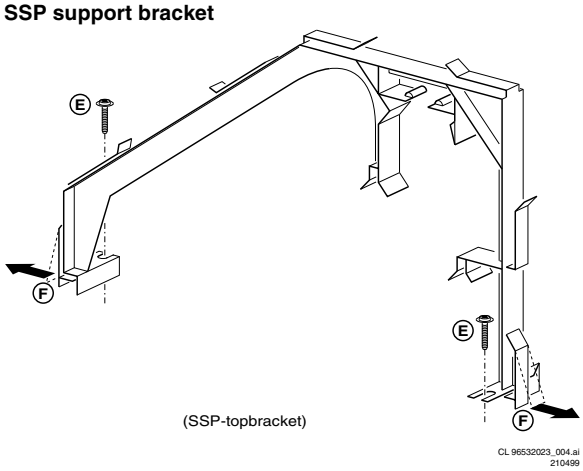

Figure 4-5

How to remove the 'module support bracket' on the Small Signal Panel (SSP):
1. Remove the two fixation screws [E].
2. Pull the snap-hooks [F] to the outside direction, and remove the bracket. The left snap-hook is somewhat difficult to release (with some effort it is possible to release it, by manipulating the hook with a finger underneath the MCS-module at the left hand side).

LSP support bracket

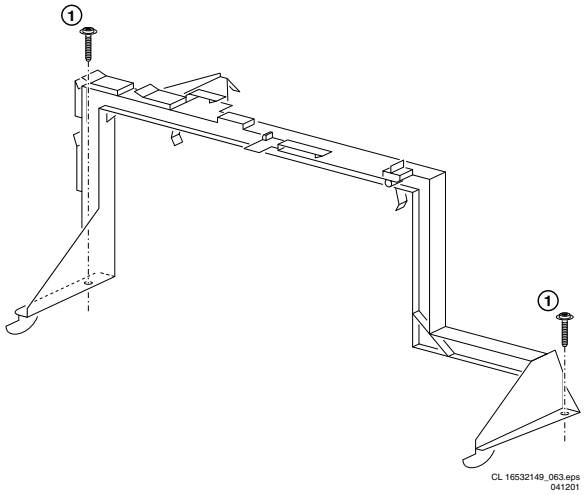

Figure 4-6

How to remove the 'module support bracket' on the Large Signal Panel (LSP):
1. Remove the two fixation screws [1].
2. Remove the Top Supply panel (besides the LSP, see 'Service position 3' below).
3. Now remove the bracket.

4.2 Service Positions

This chassis has several predefined service positions:
1. For the component side of the main chassis panels (SSP, LSP and Top Supply).
2. For the copper side of the Multi Channel Sound (MCS) panel.
3. For the copper side of the Top Supply panel (TSP).
4. For the copper side of both the LSP and TSP.

All service positions are explained in more detail below.

4.2.1 Service Position 1

Overiew 1

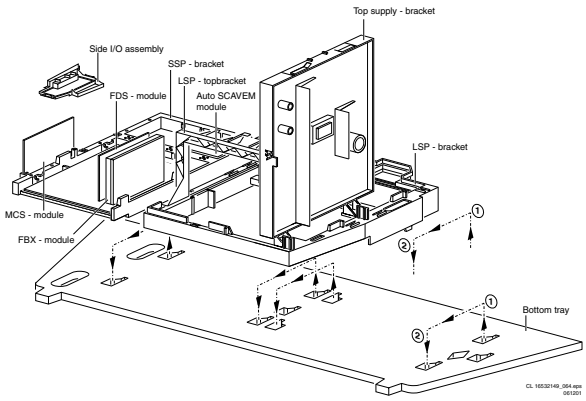

Figure 4-7

1. Pull the complete SSP- and LSP assembly about eight cm backwards
   Caution: be very careful not to damage the CRT panel with the DAF-module!.
   The brackets are not fixed together, but can be repositioned backwards, as if they were one bracket.
2. Hook the brackets in the first row of the fixation-holes in the bottom plate (in other words: re-position the fixation from [1] to [2]).
3. Now all important service test points are accessible at the topside of the SSP.

4.2.2 Service position 2

Overiew 2

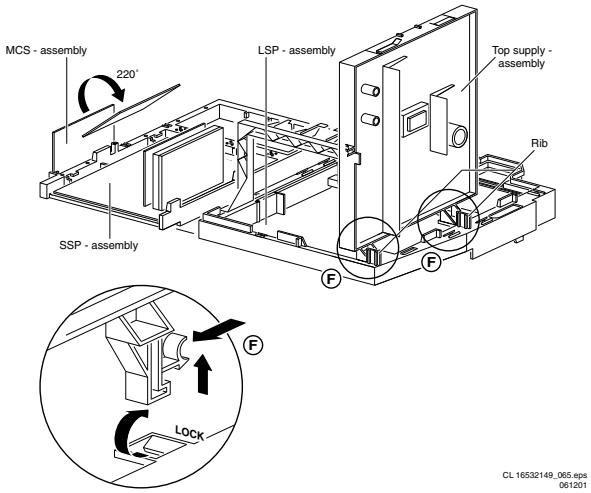

Figure 4-8

In its normal position, the MCS module can be serviced from the copper side (left hand side).
In order to gain access to the other side of the board (reflow-side), do the following:

1. First, release the snap construction at the bottom side of the MCS module. To do this, release the hook with e.g. a screwdriver (approach it from the rear).
2. After release, rotate the board about 220 degrees clockwise (hinge at connectors). The board can lean on the SSP top bracket.
3. All reflow components and test points on this side, are accessible now.

4.2.3 Service Position 3

Overiew 3

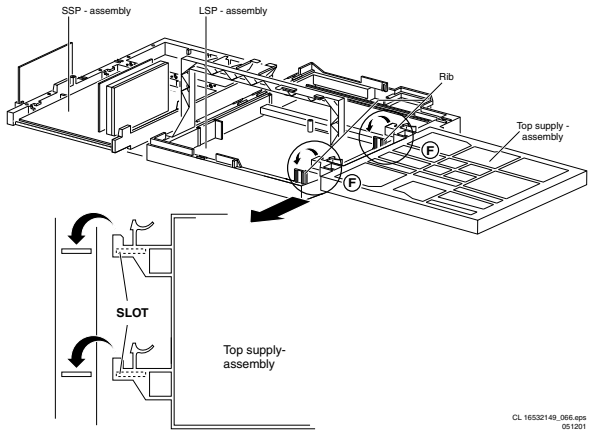

Figure 4-9

In order to gain easy access to the copper side of the Top Supply (TSP) assembly, do the following:

1. Pull the two release hooks (F) of the TSP-bracket backwards (see figure of 'Service position 2').
2. After you hear a release click, you can lift the bracket.
3. Now, rotate the assembly 90 degrees clockwise (from vertical to horizontal position).
   Caution: before doing this, release the wire cables from their clamps and, if necessary, disconnect the wire cable 0390 coming from the rotation-coil.
4. Place the two support-posts [F] of the assembly over the two ribs that are available on the right side of the LSP bracket.
5. The copper side of the TSP, with its service test points is available now.

4.2.4 Service position 4

Overiew 4

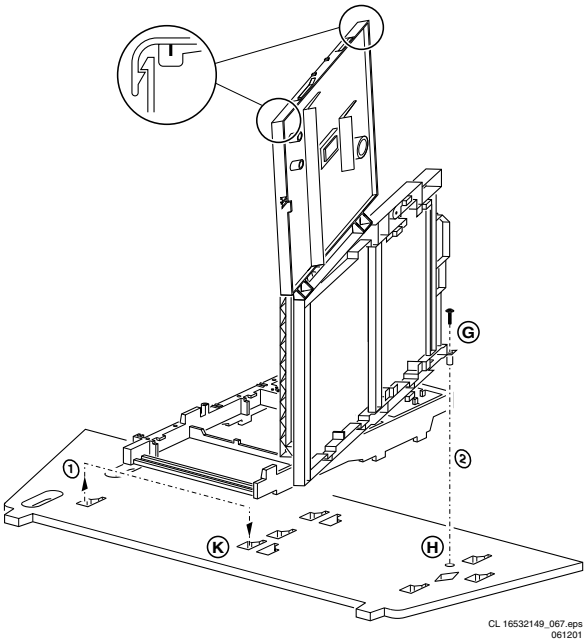

Figure 4-10

In order to gain easy access to the component sides of the LSP and Top Supply assembly, do the following:

1. First, reinforce the above-described 'TSP fixation' with a screw (the rear support-post contains a hole for this).
2. Now move as well the SSP- as the LSP bracket about 25 cm to the right.
3. Rotate the complete LSP/TSP assembly 90 degrees anti-clockwise, such that snap hook [G] is placed into hole [H]. If necessary, reinforce this construction with a screw.
4. Now you can measure all the service test points of the LSP on the right hand side, and of the TSP at the left hand side.
5. For measurement safety, shift the left front hook of the SSP bracket in the right SSP hole of the bottom plate (see [K] of service position 1).

4.2.5 FDS-module

One side is easy accessible whit the module on its place. One way to measure the other side (= FBX side) is to remove the FBX and overrule the protections (see 'Repair Tips' in chapter 5).

4.2.6 Feature Box (FBX)

First, remove the shielding of the FBX. Now, the test points on the 'LOT side' are easy accessible.
To get access to the test points on the 'FDS side', you have to remove the FDS module and bypass the RGB-path (see also the 'Repair Tips' in chapter 5).

4.2.7 Auto-SCAVEM

This panel is placed in front of the SSP. Because most of its components are placed on the bottom side, you must lift the panel from its bracket before you can measure it. Therefore release the two fixation clamps (one at the 'SSP side' and one at the 'LSP side'), and lift the panel.

4.3 Board Removal

Sometimes, it can be necessary to swap a complete Printed Wiring Board (PWB). How that can be done is explained below.

4.3.1 Small Signal Panel (SSP)

1. Remove the 'module support bracket' (see paragraph 4.1.6).
2. Release the three fixation clamps on the right hand side of the bracket.
3. Press the board upwards at the same side.
4. Remove the board from the bracket.

4.3.2 Top Supply Panel (TSP)

1. Remove the fixation screws (one at the top, one on the right side, and two on the left side).
2. Release the two top-corner snap constructions (see circle in figure 'Position 4'), by forcing them outwards.
3. The panel hinges at the bottom of the bracket. Remove the bracket, by forcing the two sides of the bracket somewhat outwards.

4.3.3 Large Signal Panel (LSP)

1. Remove the Top Supply module (see paragraph above)
2. Remove the 'module support bracket' (see paragraph 4.1.6).
3. Remove the fixation screw in the middle of the Large Signal board.
4. Release the fixation clamps on the right, rear, and front side of the bracket (the board hinges at the left side).
5. Remove the board from the bracket.

4.3.4 Top Control Assy/Panel

Control assy

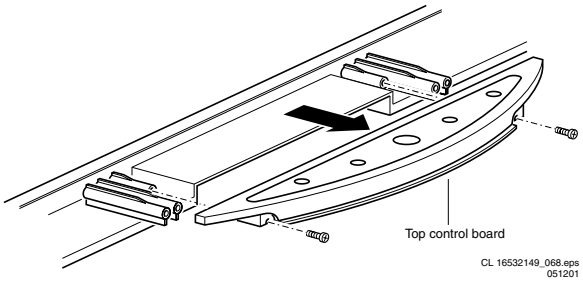

Figure 4-11

1. Release both fixation screws about 5 full turns.
2. Pull the complete assy back- and upwards (it hinges in the cabinet front).
3. Flip the assy, and you can access the board by releasing (carefully) the four fixation clamps.

4.3.5 Side-I/O Assy/Panel

Side I/O

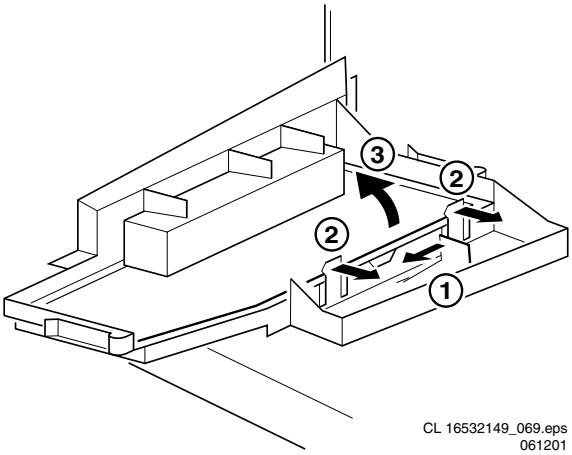

Figure 4-12

1. Release the snap-hook [1] with your finger.
2. At the same time, pull the assy backwards [2].
3. Release the two fixation clamps on the right side of the bracket (the board hinges at the left side).
4. Remove the board from the bracket.

4.3.6 Mains Switch Assy/Panel

Mains Switch

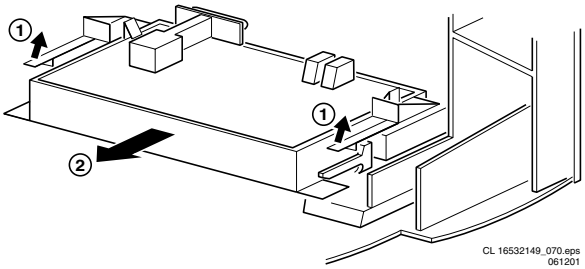

Figure 4-13

1. Release the two fixation clamps (rather difficult to reach), by pushing them upwards [1]. At the same time, pull the complete assy backwards [2]
   Note: be aware that the degaussing coil can hamper this.
2. Release the two fixation clamps on the two sides of the bracket (the board hinges at the connector side).
3. Remove the board from the bracket.
4. When the light guide (sitting in the cabinet, in front of the LEDs) is defective, you can replace it by pushing it forwards at the left side (seen from the rear). It hinges at the right side.

4.3.7 Wireless Active Surround Box

Exploded view

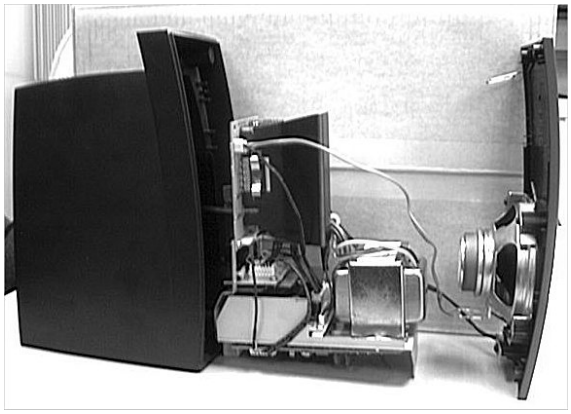

Figure 4-14

The box consists of four panels (W1 to W4), which are part of one family/combi-board. They are fixed together with wire cables (sometimes without connectors).

1. Remove the four screws which hold the front cover.
2. If necessary, unplug the loudspeaker and the LED panel (W4).
3. Remove the two screws which hold the clickfit connector for the passive loudspeaker.
4. Remove the six screws that hold the metal frame (which hold all PWBs and transformer).
5. See photo above for the exploded view.

PWB location

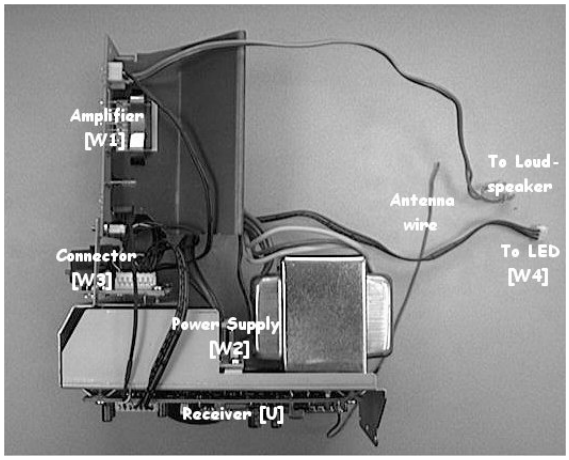

Figure 4-15

Each panel is now easily accessible to measure. If necessary, remove the panel from the metal frame by removing the belonging screws. See photo above for the panel positions. See further chapter 8.7 of the Training Manual MG3.1E.

To reassemble the box, do all processes in reverse order.
Be sure that, before the front cover is mounted:

- The (blue) antenna wire is mounted correctly in its guiding brackets.
- The 'foam dust cover' is replaced on the channel selector switch (on the bottom PWB).
- All wires/cables are returned in their original positions.

4.4 Set Reassembly

To reassemble the whole set, do all processes in reverse order.

Be sure that, before the rear cover is mounted:

- The mains cord is mounted correctly in its guiding brackets.
- All wires/cables are returned in their original positions.

5. Service Modes, Error Codes and Fault Finding

Index of this chapter:
1. Test Points
2. Service Modes
3. Problems and Solving Tips (related to TV-settings).
4. ComPair
5. Error Codes
6. Protections
7. Repair/Service Tips

5.1 Test Points

5.1.1 General Test Conditions

Perform the measurements under the following conditions:
- Service Default Mode.
- Video: Colour bar signal.
- Audio: 3 kHz left, 1 kHz right.

5.1.2 Waveform Test Points

The chassis is equipped with test points, which are, in most cases, printed on the circuit board assemblies (if not, please check chapter 6 ‘test point overview’). They refer to the functional blocks. The test points have names starting with I for IF, S for sound etc. The numbering is done in a logical sequence for diagnostics.

Note: Not all test points are measured, but they can serve as identification names in Service communication (e.g. ComPair fault find trees, SearchMan files).
In the following cases, there will be no waveform:
- When already a V_{DC} voltage is displayed in the diagrams, or when the waveform does not have an added value.
- External AV-inputs are not measured, as the waveform is equal to the source (dependent of load resistor matching).

5.1.3 DC-voltage Test Points

From practically all semiconductor pins, the DC-voltages are measured. These values are displayed in the circuit diagrams. If a DC-value is displayed between brackets then this value is measured in STANDBY-mode.

5.2 Service Modes

Service Default Mode (SDM) and Service Alignment Mode (SAM) offer several features for the service technician, while the Customer Service Mode (CSM) is used for communication between a Philips Customer Care Centre (P3C) and a customer.

There is also the option of using ComPair, a hardware interface between a computer (see requirements below) and the TV chassis. It offers the ability of structured troubleshooting, test pattern generation, error code reading, software version readout, and software upgrading.
Requirements: a Pentium processor, Windows 95/98, and a CD-ROM drive (see also paragraph 5.4).

5.2.1 Service Default Mode (SDM)

Purpose
- To create a pre-defined setting to get the same measurement results as given in this manual.
- To override SW protections (only when SDM is entered via the 'service pins' on SSP connector 0356).

Specifications
- Tuning frequency: 475.25 MHz for PAL/SECAM.
- Colour system: SECAM L for France or PAL B/G for the rest of Europe.
- All picture settings at 50 % (brightness, colour, contrast).
- All sound settings at 50 % (except volume: at 25 %).
- All service-unfriendly modes (if present) are disabled, like:
  - (sleep) timer,
  - child/parental lock,
  - blue mute,
  - auto switch-off (when no 'IDENT' video signal was received for 10 minutes),
  - skip/blank of non-favourite pre-sets,
  - smart modes,
  - auto store of personal presets,
  - auto user menu time-out.

How to Enter SDM
Use one of the following methods:
- Use the standard RC-transmitter and key in the code **0 6 2 5 9 6**, directly followed by the ‘MENU’ button.
  Note: It is possible that, together with the SDM, the main menu will appear. To switch it off, push the ‘MENU’ button again).
- Short pins 2 and 3 on connector 0356 of the SSP (see Fig. 'SSP Component Side' in chapter 8) while the set is in the normal operation mode.
  Caution: Entering SDM by this method will override all the processor-controlled protections. When doing this, the service-technician must know exactly what he is doing, as it could lead to damaging the set.
- Use the ‘DEFAULT’ button on the Dealer Service Tool (RC7150).
- Use the DST-emulation feature of ComPair.

SDM Menu

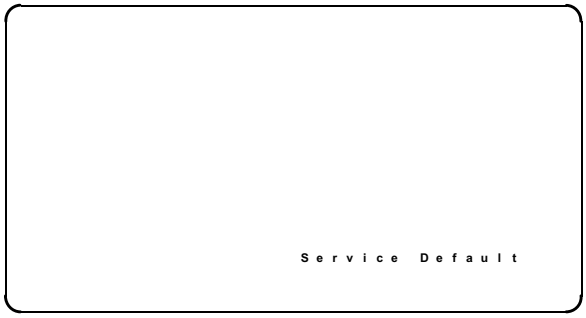

CL 16532044_031.eps
140501

Figure 5-1

After entering SDM, a blank screen is visible, with 'Service Default' in the lower right part for recognition.

How to Navigate
To toggle to the SAM mode, use a standard customer RC-transmitter and key in the code **0 6 2 5 9 6**, directly followed by the ‘OSD (i+)’ key.

How to Exit
Switch the set to STANDBY by pressing the Standby button(⏻) on the remote control transmitter. If you switch the set 'off' via the mains switch, the set will return in SDM when Mains power is re-applied.

5.2.2 Service Alignment Mode (SAM)

Purpose
- To perform (software) alignments.
- To change option settings.
- To easily identify the used software version.
- To view operational hours.
- To display (or clear) the error code buffer.

Specifications
- Software version.
- Operational hours counter.
- Options setting.
- Error buffer reading and erasing.
- Software alignments.

How to Enter
Use one of the following methods:
- Use the standard RC-transmitter and key in the code **0 6 2 5 9 6** directly followed by the 'OSD (i+)' button.
- Short pins 1 and 2 of connector 0356 on the SSP.
- Use the 'ALIGN' button on the Dealer Service Tool (RC7150), enter password **3 1 4 0** and press 'OK'.
- Use the DST-emulation feature of ComPair.

The following screen is visible:

SAM Menu

```
Date:MMM DD YYYY Id:AAABCD.D_XXXXX

Operation Hours: XXXXX.X
Errors: No Errors

Defect. Module: Unknown

Service

Reset Error Buffer                >
Functional Test                   >
Alignments                        >
Dealer Options                    >
```

CL16532044_032.eps
140501

Figure 5-2

- **Date.** Displays the software date.
- **ID.** Displays the main software version of the ROM (example: MG32E11. 0_01234 = AAABCD.D_XXXXX).
  - A = the chassis name (MG32).
  - B = the region: E = Europe, A = Asia Pacific, U = NAFTA, L = LATAM.
  - C = the language cluster number.
  - D = the main software version number.
  - X = latest 5 digits of 12nc code software.
  - For the latest software versions, see the 'Product Survey - Colour Television' publication, which is issued 4 times per year.
- **Operation Hours.** Displays the accumulated total of operation hours.
- **Errors** (followed by maximal 10 errors). The most recent error is displayed at the upper left (for an error explanation see paragraph 5.5).
- **Defect. Module.** Here, the module that generates the error is displayed. If there are multiple errors in the buffer that have not all been generated by a single module there is probably another defect. It will then display the message 'Unknown' here.
- **Reset Error Buffer.** When you press the 'OK' button, the error buffer is reset.
- **Functional Test.** All devices are tested via the 'OK' button. Eventual errors are displayed in the error buffer. The error buffer is not erased, the content returns when this test is terminated.
- **Alignments.** This will activate the 'Alignments' sub-menu.
- **Dealer Options.** Extra features for the dealers.

Note: When an NVM was corrupted (or replaced) in the MG3.1E chassis, the microprocessor replaced the content with default data (to assure that the set can operate). However, all presets and alignment values are gone now, and option numbers are also not correct. So, this was a very drastic way. In the MG3.2E chassis, the procedure is implemented in another way:
- The moment the processor recognises a corrupted NVM, an extra line will be added to the SAM menu: '**Initialise NVM**'.
- Now, you can do two things (dependent of the service instructions at that moment):
  - Save the content of the NVM via ComPair for development analysis, **before** initialising. This will give the Philips Service department an extra possibility for diagnosis (e.g. when Development asks for this).
  - Initialise the NVM (same as in the past, however now it happens conscious).

How to Navigate
- In SAM, you can select the menu items with the 'CURSOR UP/DOWN' key on the RC-transmitter. The selected item will be highlighted. When not all menu items fit on the screen, move the 'CURSOR UP/DOWN' key to display the next/previous menu items.
- With the 'CURSOR LEFT/RIGHT' keys, it is possible to:
  - (De)activate the selected menu item.
  - Change the value of the selected menu item.
  - Activate the selected submenu.
- When you press the 'MENU' key in a submenu, you will return to the previous menu.

How to Exit
Use one of the following methods:
- Press the 'MENU' button on the RC-transmitter.
- Switch the set to 'STANDBY' (⏻) via the RC-transmitter.
- Switch the set 'off' and 'on' with the mains switch.
- Press the 'EXIT' button on the DST.

5.2.3 Customer Service Mode (CSM)

Purpose
When a customer is having problems with his TV-set, he can call his dealer. The service technician can than ask the customer to activate the CSM, in order to identify the status of the set. Now, the service technician can judge the severness of the complaint. In many cases, he can advise the customer how to solve the problem, or he can decide if it is necessary to visit the customer.
The CSM is a read only mode, therefore modifications in this mode are not possible.

How to Enter CSM
Use one of the following methods:
- Press the 'MUTE' button on the RC-transmitter simultaneously with the 'MENU' button on the TV (top control) for, at least, 4 seconds (be sure to point the RC-transmitter directly to the IR-receiver of the set, otherwise you will activate the 'Dealer Demo Mode').
- Key in the code **1 2 3 6 5 4** via the standard RC transmitter.

Notes
- Activation of the CSM is only possible if there is no (user) menu on the screen!
- If you do not point the RC-transmitter correctly to the RC-receiver in the set, and you push the 'MENU' button for more than 6 s, the TV starts in 'demo' mode. To leave this mode, push 'MENU' again for more than 6 s.

After activation of the Customer Service Menu, the following screen (Customer Service Menu 0) will appear:

CSM Menu 0

```
CUSTOMER SERVICE MENU 0

0   Typenumber          ............
25  FBX SW Version      310431703530
```

CL16532149_072.eps
061201

Figure 5-3

- **Type number.** This information (e.g. 32PW9767/12) is very helpful for a helpdesk or repair shop, as reference for further diagnosis. In this way, it is not necessary for the customer to look at the rear of his TV-set.
- **FBX SW Version.** The 12nc-code of the build-in Feature Box software version. For the latest software versions, see the ‘Product Survey - Colour Television’ publication, which is issued four times per year.

By means of the ‘CURSOR-DOWN’ knob on the RC-transmitter the Customer Service Menu 1 will appear.
By means of the ‘CURSOR-UP’ knob on the RC-transmitter the Customer Service Menu 0 will appear again.

Customer Service Menu 1 represents following information:

CSM Menu 1

```
CUSTOMER SERVICE MENU 1

1    SW Version          ............
2    Code 1              ...  ...  ...  ...
3    Code 2              ...  ...  ...  ...
4    LS Volume           ..
5    LS Brightness       ..
6    LS Contrast         ..
7    LS Colour           ..
8    LS Headphone        ..
9    Sharpness           ..
10   Dolby               .....
11   Surround Mode       ............
11a  Tuner Frequency     ............
```

CL16532044_034.eps
140501

Figure 5-4 CL

- **Software version.** The build in software version (e.g. MG32E11.0_XXXXX). You will find details of the software versions in the chapter 'Software Survey' of the 'Product Survey - Colour Television' publication. This publication is issued four times a year.
- **Code 1.** Gives the last five errors of the error buffer. As soon as the built-in diagnose software has detected an error the buffer is adapted (see paragraph 5.5.3 for a description).
- **Code 2.** Gives the first five errors of the error buffer. As soon as the built-in diagnose software has detected an error the buffer is adapted. The last occurred error is displayed on the leftmost position of code 2. Each error code is displayed as a 3 digit number. When less than 10 errors occur, the rest of the line(s) is (are) empty. In case of no errors, the text 'No Errors' is displayed (see paragraph 5.5.3 for a description).
- **LS Volume.** Gives the Last Status of the volume as set by the customer for this selected transmitter. The value can vary from 0 (volume is minimum) to 36 (volume is maximum). Volume values can be changed via the volume key on the RC-transmitter.
- **LS Brightness.** Gives the Last Status of the brightness as set by the customer for this selected transmitter. The value can vary from 0 (brightness is minimum) to 63 (brightness is maximum). Brightness values can be changed via the 'CURSOR LEFT' and 'CURSOR RIGHT' keys on the RC-transmitter after pressing the 'MENU' button and selecting 'PICTURE' and 'BRIGHTNESS'.
- **LS Contrast.** Gives the Last Status of the contrast as set by the customer. The value can vary from 0 (contrast is minimum) to 63 (contrast is maximum). Contrast values can be changed via 'CURSOR LEFT' and 'CURSOR RIGHT' keys on the RC-transmitter after pressing the 'MENU' button and selecting 'PICTURE' and 'CONTRAST'.
- **LS Colour.** Gives the Last Status of the colour saturation, as set by the customer. The value can vary from 0 (colour is minimum) to 63 (colour is maximum). Colour values can be changed via 'CURSOR LEFT' and 'CURSOR RIGHT' keys on the RC-transmitter after pressing the 'MENU' button and selecting 'PICTURE' and 'COLOUR'.
- **LS Headphone.** Gives the Last Status of the headphone volume, as set by the customer. The value can vary from 0 (volume is minimum) to 24 (volume is maximum). Headphone volume values can be changed via the 'CURSOR LEFT' and 'CURSOR RIGHT' keys on the RC-transmitter after pressing the 'MENU' button and selecting 'SOUND' and 'HEADPHONE'.
- **Sharpness.** Gives the sharpness value. The value can vary from 0 (sharpness is minimum) to 7 (sharpness is maximum). In case of bad antenna signals, a too high value of the sharpness can result in a noisy picture. Sharpness values can be changed via the 'CURSOR LEFT' and 'CURSOR RIGHT' keys on the RC-transmitter after pressing the 'MENU' button and selecting 'PICTURE' and 'SHARPNESS'.
- **Dolby.** Indicates whether the received transmitter transmits Dolby sound (present) or not (not present). Attention: The presence of Dolby can only be tested by the software on the Dolby Signalling bit. If a Dolby transmission is therefore received without a Dolby Signalling bit, then this indicator will show 'not present' even though such a Dolby transmission is received.
- **Surround Mode.** Indicates the by the customer selected surround mode (or automatically chosen mode). In case the set is a Non-Dolby set, there will be displayed '0'. If it is a Dolby-set then is displayed: 'Stereo', 3D Surround', 'Dolby Pro Logic', 'Dolby 3 Stereo', or 'Hall'. These settings can be influenced by toggling the surround mode button on remote control (white button). It can also have been selected automatically by signalling bits (internal software
- **Tuner Frequency.** Indicates the frequency the selected transmitter is tuned to. The tuner frequency can be changed via the 'CURSOR LEFT' and 'CURSOR RIGHT' keys for fine tune or by entering directly with the digit keys 0 to 9 on the RC-transmitter after opening the installation menu and selecting ‘MANUAL INSTALLATION’. Pressing 'TIMER' and 'ENLARGE' at the same time can open the installation menu.

By means of the 'CURSOR-DOWN' knob on the RC-transmitter the Customer Service Menu 2 will appear. By means of the 'CURSOR-UP' knob on the RC-transmitter the Customer Service Menu 1 will appear again.

Customer Service Menu 2 represents following information:

CSM Menu 2

```
CUSTOMER SERVICE MENU 2

13  Centre Volume        ..
14  DNR                  ...
15  Noise Figure         ..
16  Digital Option       ..
17  Colour System        .....
18  TV System            .....
19  Audio System         .....
20  Tuned bit            .....
21  Speaker Config.      ............
22  Digital Sources      ............
23  Rear volume left     ..
24  Rear volume right    ..
```

CL 16532149_073.eps
061201

Figure 5-5

- **Centre Volume.** Gives the volume value of the centre loudspeaker. This value can vary from 0 (minimum volume) to 63 (maximum volume). Centre volume can be changed via the 'CURSOR LEFT' and 'CURSOR RIGHT' keys on the RC-transmitter after pressing the 'MENU' button and selecting 'SOUND', 'DOLBY PRO LOGIC' and selecting 'CENTRE VOLUME'. This feature is only available when surround mode is in 'DOLBY PRO LOGIC', 'DOLBY 3 STEREO', or '3D SURROUND'.
- **DNR.** Gives the setting of the Dynamic Noise Reduction for the selected transmitter. The DNR can be changed via the 'DNR' button on the remote control handset. The following selections are possible:
  - 'OFF - MIN - MED - MAX' or,
  - 'OFF - AUTOMATIC' (for sets with 'Automatic Noise Reduction').
- **Noise Figure.** Gives the noise ratio for the selected transmitter. This value can vary from 0 (good signal) to 127 (average signal) and to 255 (bad signal).
- **Digital Option.** Gives the selected digital mode. Change via the 'CURSOR LEFT' and 'CURSOR RIGHT' keys on the RC-transmitter, after pressing the 'MENU' button and selecting 'PICTURE', 'DIGITAL OPTIONS'. Options are:
  - 100 HZ DIG. SCAN.
  - PIXEL PLUS.
  - DOUBLE LINES.
- **Colour System.** Gives information about the colour system of the selected transmitter.
  - Black and white: No colour carrier received
  - PAL: PAL signal received
  - SECAM: SECAM signal received
  - NTSC: NTSC signal received
- **TV System.** Gives information about the video system of the selected transmitter.
  - BG: BG signal received
  - DK: DK signal received
  - I: PAL I signal received
  - L: SECAM L signals received
  - M38.9: NTSC M signal received with video carrier on 38.9 MHz
  - MN: NTSC M signal received
- **Audio System.** Gives information about the audio system of the selected transmitter.
  - Sound Muted: No sound
  - Dolby Pro Logic: Dolby Pro Logic sound received
  - Mono: Mono sound received
  - Stereo: Stereo sound received
  - Dual I: Language I received
  - Dual II: Language II received
  - Digital Mono: Digital mono sound is received
  - Digital Stereo: Digital stereo sound is received
  - Digital Dual I: Digital language I is received
  - Digital Dual II: Digital language II is received
- **Tuned bit.** Gives information about the tuning method of the stored pre-set. If a channel is found via 'automatic installation', you will see the value 'On'. When you change this (automatically found) frequency via 'fine tune' adjustment (installation menu - manual installation), the displayed value will change to 'Off'. Therefore, when you see the value 'Off' in this line, it is an indication that the received channel is a non-standard signal (e.g. of a VCR).
- **Speaker config.** Gives the speaker configuration settings. In case the set is a non-Dolby set, it displays '0'. If it is a Dolby-set, it displays: 'FULL INTERNAL', 'L/R EXTERNAL', 'SURROUND EXTERNAL' or 'FULL EXTERNAL'. Change the speaker configuration (for a Dolby-set), via the 'CURSOR LEFT' and 'CURSOR RIGHT' keys on the RC-handset after opening the 'INSTALLATION' menu and selecting 'SETUP'. Open the 'INSTALLATION' menu by pressing the 'TIMER' and 'ENLARGE' buttons at the same time.
- **Digital Sources.** Gives the configuration setting for the digital source. If one of these is selected, the starting point is a top quality signal on that input and a number of settings are therefore changed automatically. Change the digital source via the 'CURSOR LEFT' and 'CURSOR RIGHT' keys on the RC-transmitter after opening the installation menu and selecting 'SETUP'. Pressing 'TIMER' and 'ENLARGE' at the same time can open the installation menu. It displays:
  - NONE
  - EXT1, 2, 3, or 4
  - EXT1 + DIG. AUDIO
  - EXT1, 2, 3, or 4 + DIG. STB (Digital Set Top Box)
  - FRONT
- **Rear volume Left.** Only valid when Dolby Digital option is 'on'. This gives the volume value of the left surround sound loudspeaker. This value can vary from 0 (minimum volume) to 63 (maximum volume). Rear volume left can be changed via the ‘cursor left’ and ‘cursor right’ keys on the remote control handset after pressing the ‘menu’ button and selecting ‘sound’, ‘Surround settings’ and selecting ‘Rear volume left’.
- **Rear Volume Right.** Only valid when the Dolby Digital option is 'on'. This gives the volume value of the right surround sound loudspeaker. This value can vary from 0 (minimum volume) to 63 (maximum volume). Rear volume right can be changed via the ‘cursor left’ and ‘cursor right’ keys on the remote control handset after pressing the menu button and selecting ‘sound’, ‘Surround settings’ and selecting ‘Rear volume right’.

How to Exit CSM

Use one of the following methods:

- After you press a key on the RC-transmitter (with exception of the 'CHANNEL' and 'VOLUME' keys).
- After you switch the TV-set 'off' with the mains switch.

5.3 Problems and Solving Tips (Related to TV-settings)

Note: Below described problems are all related to the TV settings. The procedures to change the parameter (or status) of the different settings are described.

5.3.1 Picture Problems

Worse Picture Quality in Case of Digital Sources (e.g. DVD)

1. Check line ‘Digital sources’. This will give the indication ‘Front’, ‘Ext1’, ‘Ext1 + Dig. Audio’, ‘Ext2’, ‘Ext3’, ‘Ext4’ or ‘None’.

2. Check if the digital source is really connected to the indicated external input. If not, change the input to the correct one.

Snowy/Noisy Picture
Check line 'Noise Figure'. In case the value is 127 or higher and also high on other programs, check the aerial cable/aerial system.

Picture too Dark
1. Press 'Smart Picture' button on the Remote Control handset. In case picture improves, raise the brightness value or raise the contrast value. The new value(s) are automatically stored for all TV channels.
2. After switching on the Customer Service Mode, the picture is OK. Raise the brightness and/or the contrast value. The new value(s) are automatically stored for all TV channels.
3. Check lines 'Brightness' and 'Contrast'. The brightness and/or the contrast value is low (<15). Raise the brightness and/or contrast value.

Picture too Bright
1. Press 'Smart Picture' button on the Remote Control handset. In case picture improves, reduce the brightness value or reduce the contrast value. The new value(s) are automatically stored for all TV channels.
2. After switching on the Customer Service Mode, the picture is OK. Reduce the brightness value or reduce the contrast value. The new value(s) are automatically stored for all TV channels.
3. Check lines 'Brightness' and 'Contrast'. The brightness and/or the contrast value is high (>70). Reduce the brightness value or raise the contrast value.

Fading Picture
Digital scan effect. Check line 'DNR'. The status of 'DNR' is a value between 0 and 100. This value has not really a practical explanation. In case you have a fading picture, you could influence the 'DNR'-level by navigating route: ‘Menu’ - ‘Picture’ - ‘DNR’. There are four different levels selectable.

White Line around Picture Elements and Text
1. Press 'Smart Picture' button on the Remote Control handset. In case picture improves, reduce the sharpness value. The new value(s) are automatically stored for all TV channels.
2. After switching on the Customer Service Mode, the picture is OK. Reduce the sharpness value. The new value(s) are automatically stored for all TV channels.
3. Check line 'Sharpness'. Reduce the sharpness value. The new value(s) are automatically stored for all TV channels

No Picture
Check line ‘Tuned bit’. In case the value is ‘on’, install the required program again. Open the installation menu by pressing ‘Timer’ and ‘Enlarge’ at the same time, and perform manual installation.

Blue Picture and/or Unstable Picture
No proper signal is received. Check line 'Noise Figure'. If value is higher then 127, suspect the signal. Check your cable- or aerial signal.

Black and White Picture.
Check line 'Colour'. In case the value is low (<30), raise the value of colour. The new value(s) are automatically stored for all TV channels.

No Colours/ Colours not Correct / Unstable Picture / Colour Lines around Picture Elements.
Check lines 'TV System'. Check if system is OK.
BG stand for PAL B/G, L/La for SECAM L, I for PAL I or L', D/K or SECAM D/K. They correspond with the System selections made in the 'install' menu, respectively West Europe, France, UK, and East Europe. In case system is wrong, correct this via manual installation.

Menu Text not Sharp Enough.
1. Press 'Smart Picture' button on the Remote Control handset. In case picture improves, reduce the contrast value. The new value(s) are automatically stored for all TV channels.
2. After switching on the Customer Service Mode, the picture is OK. Reduce the contrast value. The new value(s) are automatically stored for all TV channels.
3. Check line 'Contrast'. If the value is high (>75), reduce it.

5.3.2 Sound Problems

No Sound from Left and Right Speaker.
1. Press 'Smart Sound' button on the Remote Control handset. In case sound improves, raise the volume value. The new value(s) are automatically stored for all TV channels.
2. After switching on the Customer Service Mode, the volume is OK. Raise the volume value. The new value(s) are automatically stored for all TV channels.
3. Check line 'Volume'. The value is low, so raise it. The new value(s) are automatically stored for all TV channels.

Sound too Loud for Left and Right Speaker.
1. Press 'Smart Sound' button on the Remote Control handset. In case sound improves, reduce the volume value. The new value(s) are automatically stored for all TV channels.
2. After switching on the Customer Service Mode, the volume is OK. Reduce the volume value. The new value(s) are automatically stored for all TV channels.
3. Check line 'Volume'. The value is high, so reduce it. The new value(s) are automatically stored for all TV channels.

No Sound from Centre Speaker.
1. Check line ‘Centre Volume’. If the value is low, raise it.
2. In case of a Dolby set, check line ‘Surround mode’. The centre speaker is only active in the surround modes 3D Surround, ProLogic, Dolby 3 Stereo and DD.

Sound too Loud from Centre Speaker.
Check line ‘Centre Volume’. If the value is high, reduce it.

No Sound from Rear Speakers.
1. Check line ‘Surround mode’. In case this line is ‘Off’ or ‘Hall’, change the surround mode into 3D Surround, ProLogic, Dolby 3 Stereo and DD.
2. Check line ‘Rear volume’. If the value is low, raise it. The new value(s) are automatically stored for all TV channels.
3. Check lines ‘Rear volume left’ and ‘Rear volume right’. If the value is low, raise them. The new value(s) are automatically stored for all TV channels.
4. Check if the surround boxes receive sound, the green LED should be on.
5. Check if the correct RF-channel is chosen. Look at the bottom of the active box for the RF-channel of the surround speakers. Check the installed RF-channel in the installation menu. If this RF-channel is different, change it to the correct one.

5.4 ComPair

5.4.1 Introduction

ComPair (Computer Aided Repair) is a service tool for Philips Consumer Electronics products. ComPair is a further development on the European DST (service remote control),

which allows faster and more accurate diagnostics. ComPair has three big advantages:

- ComPair helps you to quickly get an understanding on how to repair the chassis in a short time by guiding you systematically through the repair procedures.
- ComPair allows very detailed diagnostics (on I^2C level) and is therefore capable of accurately indicating problem areas. You do not have to know anything about I^2C commands yourself because ComPair takes care of this.
- ComPair speeds up the repair time since it can automatically communicate with the chassis (when the microprocessor is working) and all repair information is directly available. When ComPair is installed together with the SearchMan electronic manual of the defective chassis, schematics and PWBs are only a mouse click away.

5.4.2 Specifications

ComPair consists of a Windows based faultfinding program and an interface box between PC and the (defective) product. The ComPair interface box is connected to the PC via a serial or RS232 cable.
In this chassis, the ComPair interface box and the TV communicate via a bi-directional infrared link.

The ComPair faultfinding program is able to determine the problem of the defective television. ComPair can gather diagnostic information in two ways:

- **Automatic** (by communication with the Receiver box): ComPair can automatically read out the contents of the entire error buffer. Diagnosis is done on I^2C level. ComPair can access the I^2C bus of the Receiver box. ComPair can send and receive I^2C commands to the micro controller of the Receiver box. In this way, it is possible for ComPair to communicate (read and write) to devices on the I^2C busses of the Receiver box.
- **Manually** (by asking questions to you): Automatic diagnosis is only possible if the micro controller of the Receiver box is working correctly and only to a certain extend. When this is not the case, ComPair will guide you through the faultfinding tree by asking you questions (e.g. *Does the screen give a picture? Click on the correct answer: YES / NO*) and showing you examples (e.g. *Measure test-point I7 and click on the correct oscillogram you see on the oscilloscope*). You can answer by clicking on a link (e.g. text or a waveform picture) that will bring you to the next step in the faultfinding process.

By a combination of automatic diagnostics and an interactive question/answer procedure, ComPair will enable you to find most problems in a fast and effective way.

Beside fault finding, ComPair provides some additional features like:

- Up- or downloading of pre-sets.
- Managing of pre-set lists.
- Emulation of the (European) Dealer Service Tool (DST).
- If both ComPair and SearchMan (Electronic Service Manual) are installed, all the schematics and the PWBs of the set are available by clicking on the appropriate hyperlink. **Example:** *Measure the DC-voltage on capacitor C2568 (Schematic/Panel) at the SSP.*
  - Click on the 'Panel' hyperlink to automatically show the PWB with a highlighted capacitor C2568.
  - Click on the 'Schematic' hyperlink to automatically show the position of the highlighted capacitor.

Stepwise Start Up / Shut Down

Under normal circumstances, a fault in the power supply, or an error during start-up, will switch the television to protection mode. ComPair can take over the initialisation of the television. In this way it is possible to distinguish which part of the start-up routine (hence which circuitry) is causing the problem.

Stepwise start up explanation

This is realised via ComPair and is very helpful when a protection is activated (see also chapter 5.6).

Table 5-1

State	Mode description	Display LEDs	Enabled protections
0	- Low power standby - uP in Standby	Red 'on'	None
1	- High power standby - TV-set in standby	Red 0.5 Hz	None
2	- Supply 'on' - Protections 5V2, 8V6, and DC-PROT activated.	Orange/ Green0.25 Hz	67, 68, and 76
3	- Sound ICs initialised - Protections FBX- and TUNER activated.	Orange/ Green0.5 Hz	+ 77 and 80
4	- EHT startup - No black-current stabilisation - Protections VFB, HFB, LDP, and BC-PROT activated (blanked picture).	Orange/ Green2 Hz	+ 70, 71, 73, and 74
5	- TV operates - Unblanked picture.	Orange/ Green10 Hz	

Stepwise shut down explanation

In the stepwise shutdown mode, state 2 is skipped (it is not possible to de-initialise ICs).

Table 5-2

State	Mode description	Display LEDs(*)	Disabled protections
5	- TV operates - Unblanked picture.	Orange/ Green10 Hz	-
4	- EHT startup - No black-current stabilisation - All protections are enabled.	Orange/ Green2 Hz	-
3	- Sound ICs stay initialised - All protections are 'off'.	Orange/ Green0.5 Hz	74, 73, 71, and 70
1	- High power standby- TV-set in standby	Red 0.5 Hz	80, 77, 76, 68, and 67
0	- Low power standby- uP in Standby	Red 'on'	-

Note (*): When the set is in stepwise mode and, due to stepping-up, a protection is activated; the set will really go into protection (blinking red LED). The set will not leave the stepwise-mode however. By stepping up, the set can be activated again, until state X where the protection was activated. At state (X-1) diagnostic measurements can be performed.

5.4.3 How to Connect

1. First, install the ComPair Browser software on your PC (read the installation instructions carefully).
2. Connect the RS232 interface cable between a free serial (COM) port of your PC and the PC connector (marked with 'PC') of the ComPair interface.
3. Connect the Mains power adapter to the supply connector (marked with 'POWER 9V DC') on the ComPair interface.
4. Switch the ComPair interface 'off'.
5. Switch the Receiver box 'off' (remove the Mains power).

6. Point the ComPair interface to the ‘Service send-LED’ on the front of the set.
7. Plug the Mains power adapter in a Mains power outlet and switch on the interface. The green and red LEDs light up together. The red LED extinguishes after approximately 1 second, while the green LED remains lit.
8. Start the ComPair program and read the 'introduction' chapter.

Interface Connection

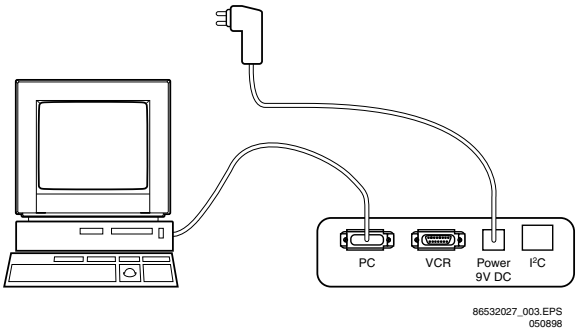

Figure 5-6

Interface Arrangement

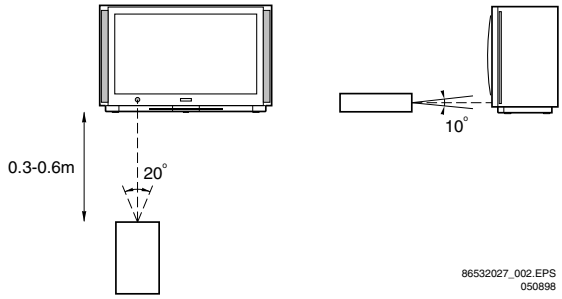

Figure 5-7

5.4.4 How to Order

ComPair order codes:
- Starter kit ComPair, SearchMan software, and ComPair interface (excluding transformer): 4822 727 21629
- ComPair interface (excluding transformer): 4822 727 21631
- Starter kit ComPair software (registration version): 4822 727 21634
- Starter kit SearchMan software: 4822 727 21635
- ComPair CD (update): 4822 727 21637
- SearchMan CD (update): 4822 727 21638

5.5 Error Codes

The error code buffer contains all detected errors since the last time the buffer was erased. The buffer is written from left to right. When an error occurs that is not yet in the error code buffer, it is written at the left side and all other errors shift one position to the right.

5.5.1 How to Read the Error Buffer

It is possible to read out the error buffer in several ways:
- **On screen via the SAM.**
  In case picture is OK, the error buffer can be read easiest via the SAM. In the main menu of the SAM the last 10 different error codes occurred are displayed. The most recent detected error code is displayed on the left side. Examples:
  – **003 000 000 000 000**: error code 3 is the last and only detected error.
  – **002 003 000 000 000**: error code 3 was first detected and error code 2 is the last detected (newest) error.
- **On screen via the CSM.**
  Same explanation as above.
- **Via ComPair (or DST).**
  See ComPair/DST manual.

5.5.2 How to Clear the Error Buffer

Use one of the following methods:
- By activation of the 'RESET ERROR BUFFER' command in the SAM menu:
- When you transmit the commands 'DIAGNOSE' - '99' - 'OK' with ComPair (or with a DST). This works in all modes, except SAM.

Notes:
- When the error buffer is full (10 codes), no new error can be stored anymore. However, of every error raised is monitored how long it exists in the error buffer. When for any reason a false raised error exists in the buffer, it will be deleted after 50 hours. If this error still is actual after 50 hours, it will be raised again. In this way, it is safeguarded that history of error codes is stored.
- Sometimes it is an option to first write down the error buffer content, reset the buffer, and look again which error codes are generated by the set.
- If the content of the error buffer has not changed for 50 hours, it resets automatically.

5.5.3 Error Codes Overview

In case of non-intermittent faults, clear the error buffer before you begin the repair. These to ensure that old error codes are no longer present.

If possible, check the entire contents of the error buffer. In some situations, an error code is only the result of another error code and not the actual cause (e.g., a fault in the protection detection circuitry can also lead to a protection).

Table 5-3

Error	Device	Description	Defective item	Diagram	Defective module indication
2	ST24E32 or M24C32	Non volatile memory	IC7008	K7	Control
3	SAA5801	OTC2.5 microprocessor/TXT	IC7003	K7	Control
5	UV1316	Tuner	U1102	K1	Tuner
10	TEA6415	I/O source select video	IC7208	K8	Source select
11	TEA6422	I/O source selct audio	IC7777	K8	Source select
15	TDA9320H	HIP I/O-video processing	IC7501	K1	Chroma IF I/O
20	TDA9330H	HOP video/deflection processor	IC7300	K6	Video Controller
21	TDA9178	LTP Peaking	IC7402	K6	Video Controller
25	MSP3410D	ITT sound processor	IC7751	K3	Audio module
26	SAA7712H	SEDSP Dolby processor	IC7770	K4	Audio module
35	UV1316	FDS Tuner	U1102	M1	Video Dual Screen Panel
36	PCF8574	FDS I/O Expander	IC7860	M2	Video Dual Screen Panel
37	SAB9079	FDS POPOV	IC7700	M4	Video Dual Screen Panel
38	TDA9320	FDS HIP2	IC7501	M1	Video Dual Screen Panel
39	M24C04	FDS NVM	IC7991	M1	Video Dual Screen Panel
40	83C751	Cordless Transmitter processor	IC7105	R	Surround Transmitter Panel
41	TDA7309	FDS Headphone	IC7620	M5	Video Dual Screen Panel
50	SAA4978H	FBX PICNIC	IC7611	L1	Feature Box
53	SAA4992	FBX FALCONIC	IC7626	L3	Feature Box
54	T8F24EF	FBX EAGLE	IC7724	L2	Feature Box
56	83C654	MCS processor	IC7803	N3	Digital Audio Module
57	TDA7438	MCS SOFAC L/R	IC7540	N8	Digital Audio Module
58	TDA7438	MCS SOFAC L/R	IC7600	N9	Digital Audio Module
59	TDA7438	MCS SOFAC L/R	IC7570	N10	Digital Audio Module
61	PCF8574	MCS I/O expander	IC7690	N16	Digital Audio Module
63	TDA8444	Auto Scavem DAC	IC7500	SC1	Auto Scavem
65	Slow I2C bus blocked		See fig 5.8	Slow I2C bus blocked	
66	Fast I2C bus blocked		See fig 5.8	Fast I2C bus blocked	
67	Supply 5V	5V2	See fig 5.8	+5V Supply	
68	Supply 8V	8V6	See fig 5.8	+8V Supply	
70	V fail protection	VFB	See fig 5.11	A3/A1/K6	Vertical Flyback
71	H fail protection	HFB	See fig 5.10	A1/K6	Horizontal Flyback
73	Line Deflection protection	LDP	See fig 5.8	A1/K6	Line Deflection
74	Beam Current Protection	BC-PROT	See fig 5.8	K6/K7	Beam Current
76	DC Sound protection	DC-PROT	See fig 5.8	A4	Sound Output
77	Feature box protection	FBX-PROT	See fig 5.8	L1	+3V (FBX) Supply
80	Tuner protection	Tuner-PROT	See fig 5.8	K1	+8V (Tuner) Supply

5.6 Protections

5.6.1 Introduction

This chassis has only one microprocessor (OTC), which remains active during Standby. This because the power of the microprocessor (and the attached memory chip set) is coming from the 3V3 supply, which is derived from the 5V Standby circuitry.
Therefore, in both 'Power on' as in 'Standby' mode, the microprocessor is connected to this power supply. The microprocessor controls the Standby line for switching 'on' and 'off' the main supply. In the Standby mode, or in the protection mode, the Standby line will open the contacts of relay 1002 via T7000, which results in switching 'off' the mains input to the main supply. In the mean time, via T7550, the LED-intensity of the opto-coupler will increase, which results in a quick shutdown of the power supply.
If a fault situation is detected, an error code is generated and, if necessary, the set is put in protection mode. This mode is indicated by blinking of the red front LED.

Protection Structure

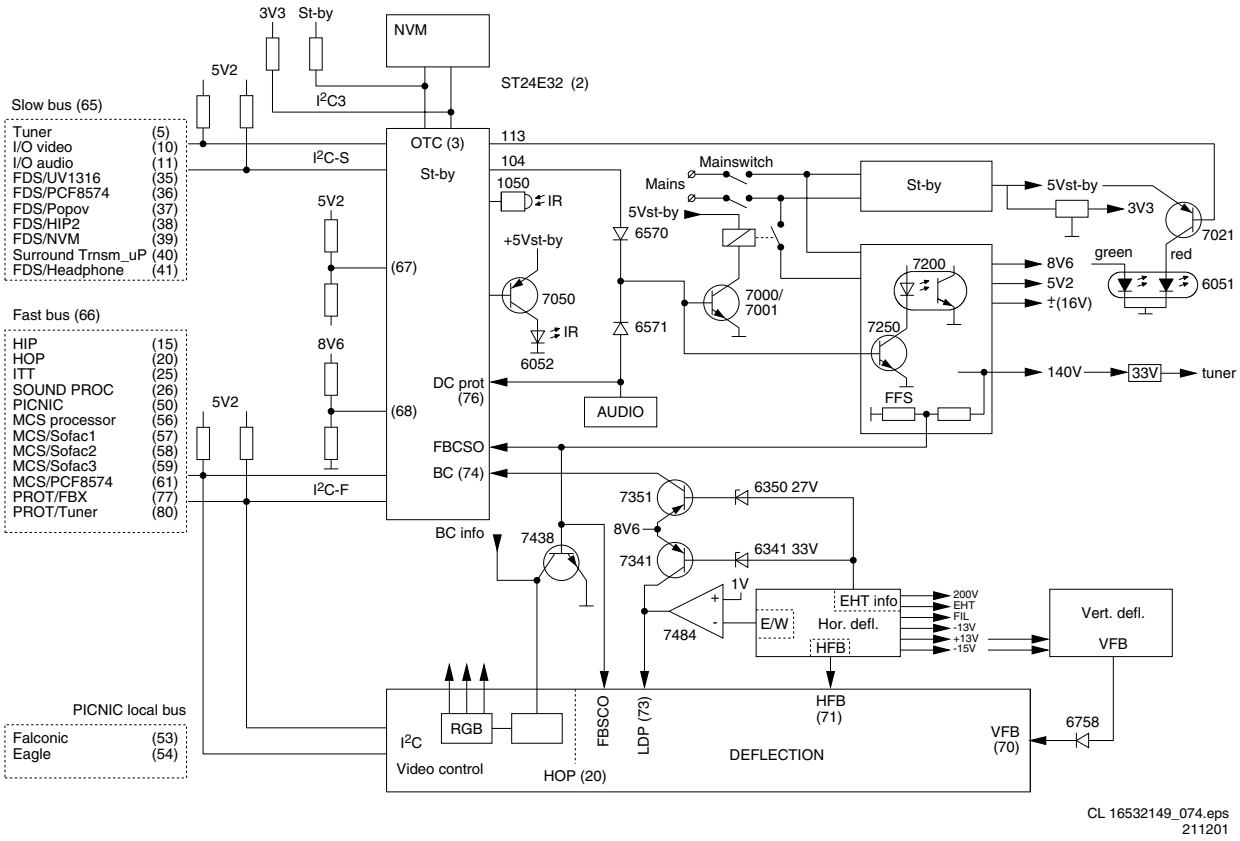

Figure 5-8

We can divide the protections in four groups:
- Protection from I²C-busses (fast and slow) or I²C-IC errors (device errors).
- Protection from the inputs on the OTC.
- Protection from the status register of the HOP (communicated via I²C-bus).
- DC-protection (from the sound amplifiers) monitored on the OTC.

5.6.2 Protection from the I²C Bus

In normal operation, some registers of the I²C controlled ICs are refreshed every 200 ms. During this sequence, three I²C-busses (and the I²C-ICs as well) are checked.

Possible protections:
- An I²C-bus protection will take place if the SDA and SCL are whether short-circuited to ground or to each other.
- An I²C-device protection can occur, when there is malfunction in communication with one specific device, or if the power supply of the device is missing.
- A FBX- and/or Tuner circuitry protection can occur, when one of these circuits do not respond for more than 1 second (measured via I²C). The set goes in protection mode.

5.6.3 Protection from the Inputs on the OTC

If a protection is detected at an input of the OTC, all protection inputs of the OTC will be scanned every 200 milliseconds for five times. If the protection on one of the inputs is still activated after 1 sec., then the set will be put in the protection-mode. Before the scanning is started, a so-called ‘ESD refresh’ is carried out. This is done, because the interrupt on one of the inputs might be caused by a Flash or ESD. As both phenomena can harm the settings of some ICs, they are initialised again to ensure the normal picture and sound conditions of the set.

8V6 and 5V2 Protection.
The OTC senses the presence of the 8V6 and 5V2. If the 8V6 and 5V2 is not present, then an error code is stored in the error buffer.

BC (Beam Current) Protection.
A circuit on the SSP measures the beam current. If this current exceeds a certain reference level, the BC-input of the OTC is set to ‘high’ via D6350 and T7351. The error code is stored in the error buffer and the set is put in protection mode.

DC Protection.

Speaker Protection

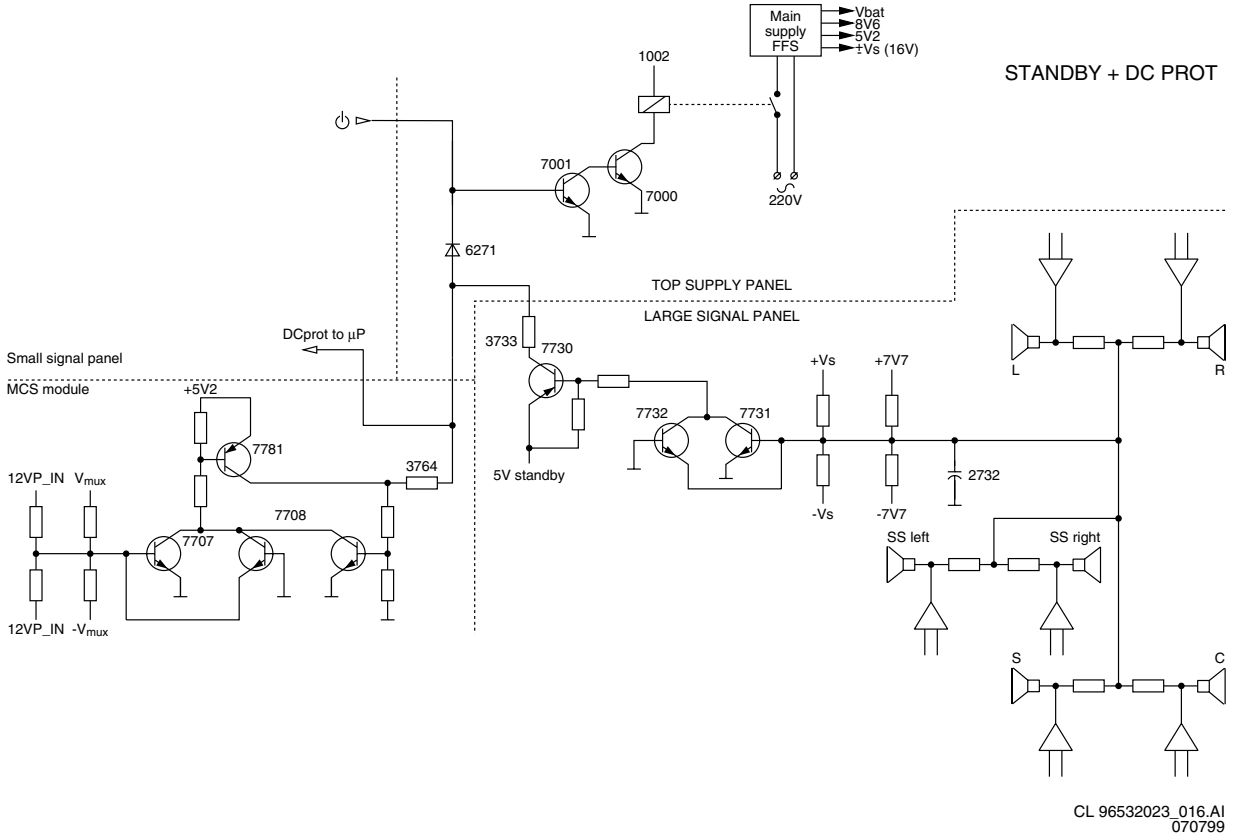

Figure 5-9

This is an important protection, measured by a circuitry on the LSP. The output of the protection circuit will slow down the power supply immediately via the opto-coupler. Then, via relay 1002, the supply is set to Standby-mode at once. To be able to store the error code in the error buffer, the protection signals are also wired to the OTC. The protection is activated in case of:

- Unbalance between $+V_S$ and $-V_S$.
- Unbalance between +7V7 and -7V7.
- V_{DC} on one of the audio amplifier outputs.
- Unbalance in the supplies of the MCS-module.

5.6.4 Protections from the Status Register of the HOP

Every 200 milliseconds the status register of the HOP is read by the OTC via I^2C. If a protection signal is detected on one of the inputs of the HOP, then the relevant error bit in the HOP register is set to 'high'. If the error bit is still 'high' after 1 s., the OTC will store the error code in the error buffer and depending on the relevancy of the error bit the set will either go into the protection-mode or not.

HFB: Horizontal Flyback

HFB Protection

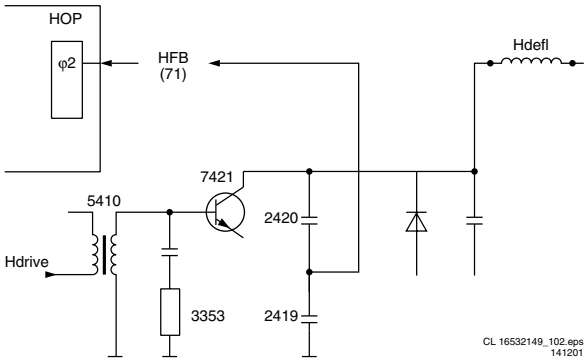

Figure 5-10

If the horizontal flyback is not present, then this is detected via the HOP. One status bit is set to 'high'. The error code is stored in the error buffer and the set will go into the protection mode

VFB: Vertical Flyback

VFB Protection

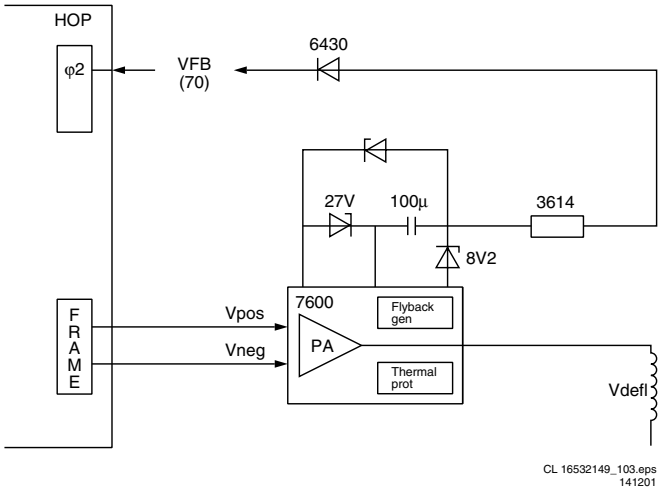

Figure 5-11

The HOP will blank the screen, if the vertical flyback signals are not present at the VFB-guard input .The relevant status bit will be set in the register of the HOP. The error code is stored in the error buffer; in this case, protection is not necessary.

LDP: Line Deflection Protection

LDP Protection

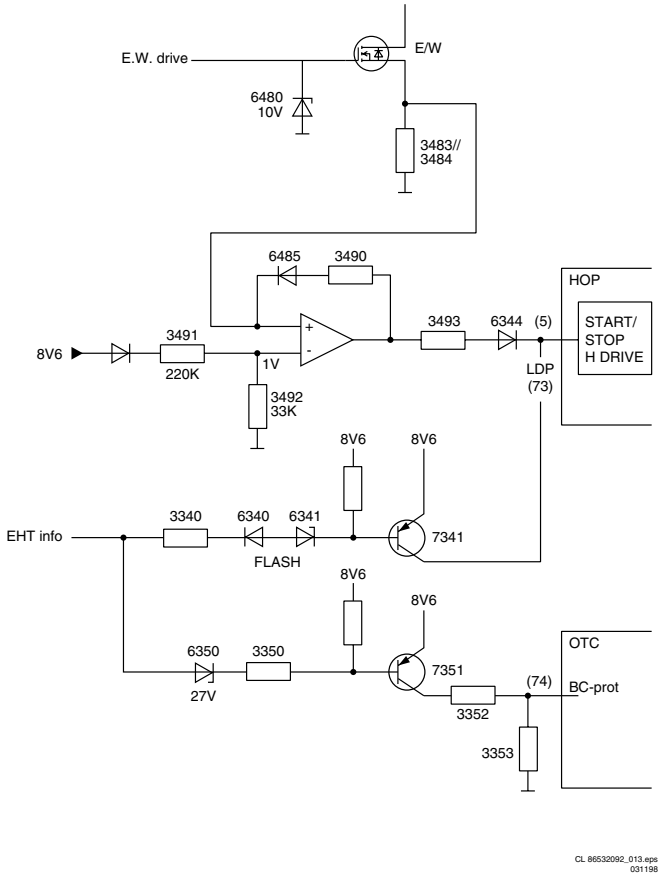

Figure 5-12

Two protection circuits are connected to the LDP-input of the HOP:

- **Flash detection.**
  From the EHT-info, via D6341 and T7341 a flash will stop the H-drive and line output stage immediately. The FLS-bit in the status register of the HOP is set to 'high'. As the duration of a flash is very short, the FLS-bit will be reset to 'low' again after the flash refresh, and via a slow start the set will start again.
- **LDP detection.**
  The EW-protection, coming from the line-output is also connected to the same input as above. The current through the EW-stage is measured by R3483 and R3484 on the LSP. The voltage across these precision resistors will increase in case of a failure at the line output stage. If the voltage becomes higher than 1 V, then the output of IC7484 will become 'high' and remains 'high' via D6485 and R3490. Via D6344 the H-drive will be stopped. The FLS-bit will be set to 'high' and remains 'high' by means of the software filtering even after a flash refresh. The OTC will put the set in Standby-mode. The error code is stored in the error buffer and the set gets into the protection mode.

5.7 Repair/Service Tips

Below, you will find some additional repair/service tips:

- To have a good **service position of the FDS module**, remove the FBX module. As the set will go in protection now, you have to overrule this. Therefore, go to the Service Default Mode via the HW-entry method (short jumpers on SSP). There will be no picture, but as the signal processing of the FDS-module is done **before** the FBX processing, you can measure the necessary waveforms, and check if the module is functioning.
- To have a good **service position of the FBX module**, remove the FDS module. To keep the set functioning, you have to bypass the YUV-path now: short pins 1-7, 2-8, and 3-9 of connector 0352.
- More **User Service Tips** are described in chapter 3 of this manual (page 34 of the DFU).
- Be aware that when you switch 'off' the TV-set, the active surround speaker is going to standby after about 10 minutes.
- In Pixel Plus mode, the **OSD menus** are a little different in size. This is normal.
- When one wants to **store settings of the FDS module**, first one has to make a hardware intervention (see explanation on diagram M1). This is because of the fact that the local NVM has a write protection that is not controlled by the main microprocessor. Be sure to remove the connection after storing.
- When the set has a **'hazy' focus**, this can be related to a bad focus setting, but can also be related to a malfunctioning of the parabola modulation part of the Auto Scavem circuitry (see diagram SC).
- An easy indication if the **'Pixel Plus' feature is functioning correctly**, is via the 'Pixel Plus Demo Mode'. To activate this, press the 'Pixel Plus' button on the RC-transmitter (see also DFU).
- When **no wireless sound** is possible, or when there is too much interference, you can still enjoy Dolby surround sound by connecting the two rear loudspeakers to the TV with a stereo cinch to stereo 3.5 mm jack cable. This cable can be ordered as service part nr. 3104 311 02251 (10 m. backup cable).

Personal Notes:

6. Wiring Diagram, Block Diagrams and Overviews

Wiring Diagram

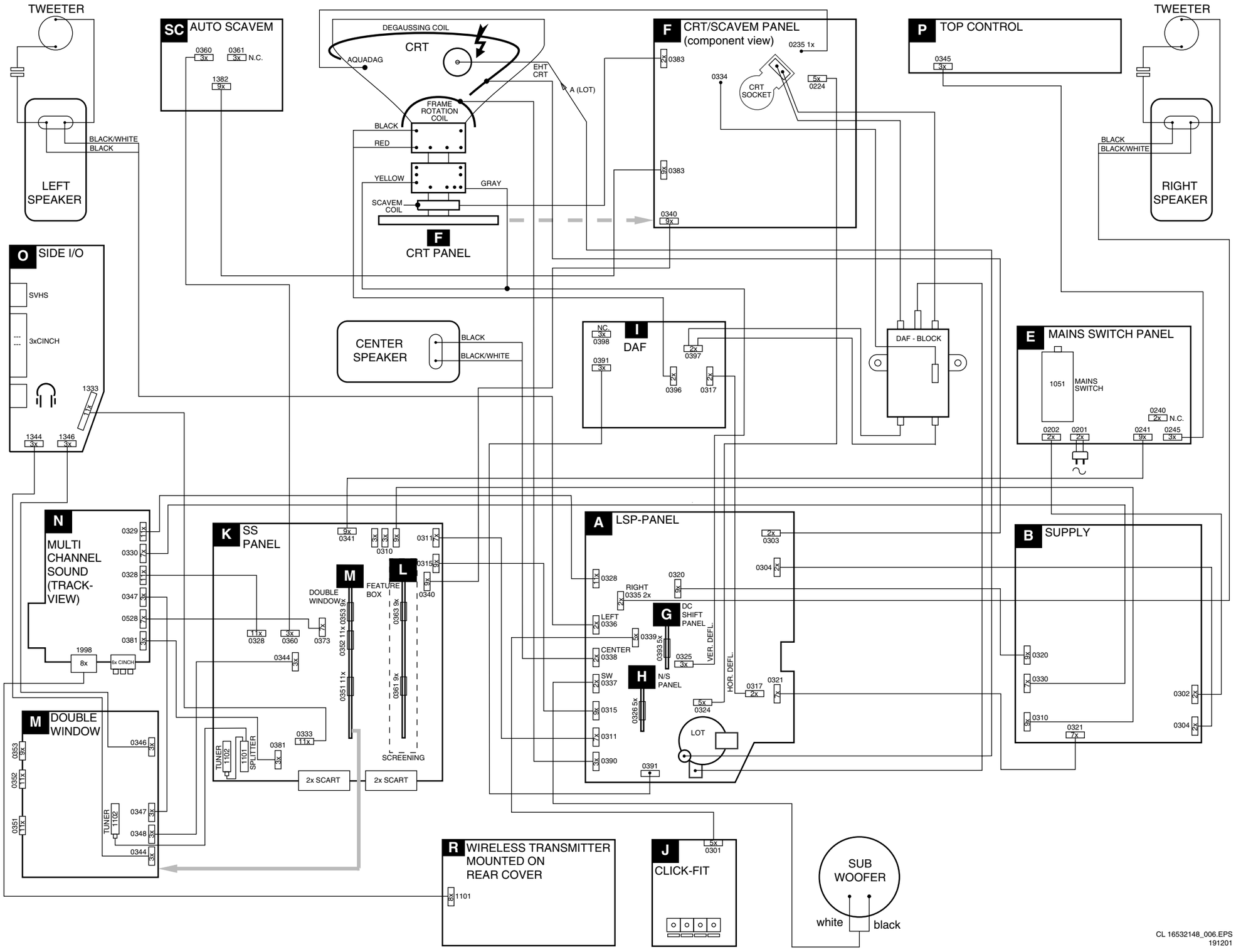

Block Diagram Supply and Deflection

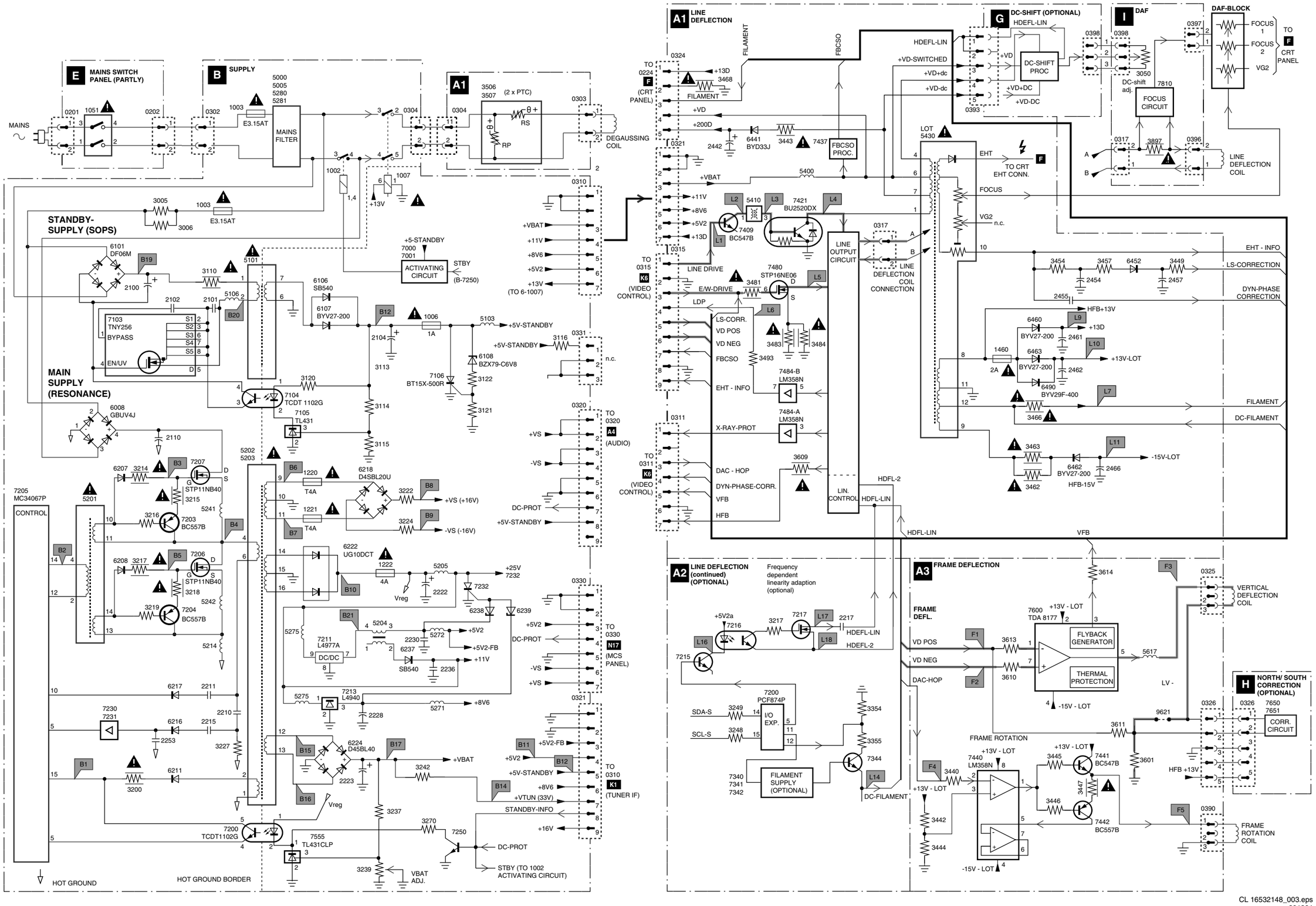

CL 16532148_003.eps
201201

Block Diagram Video

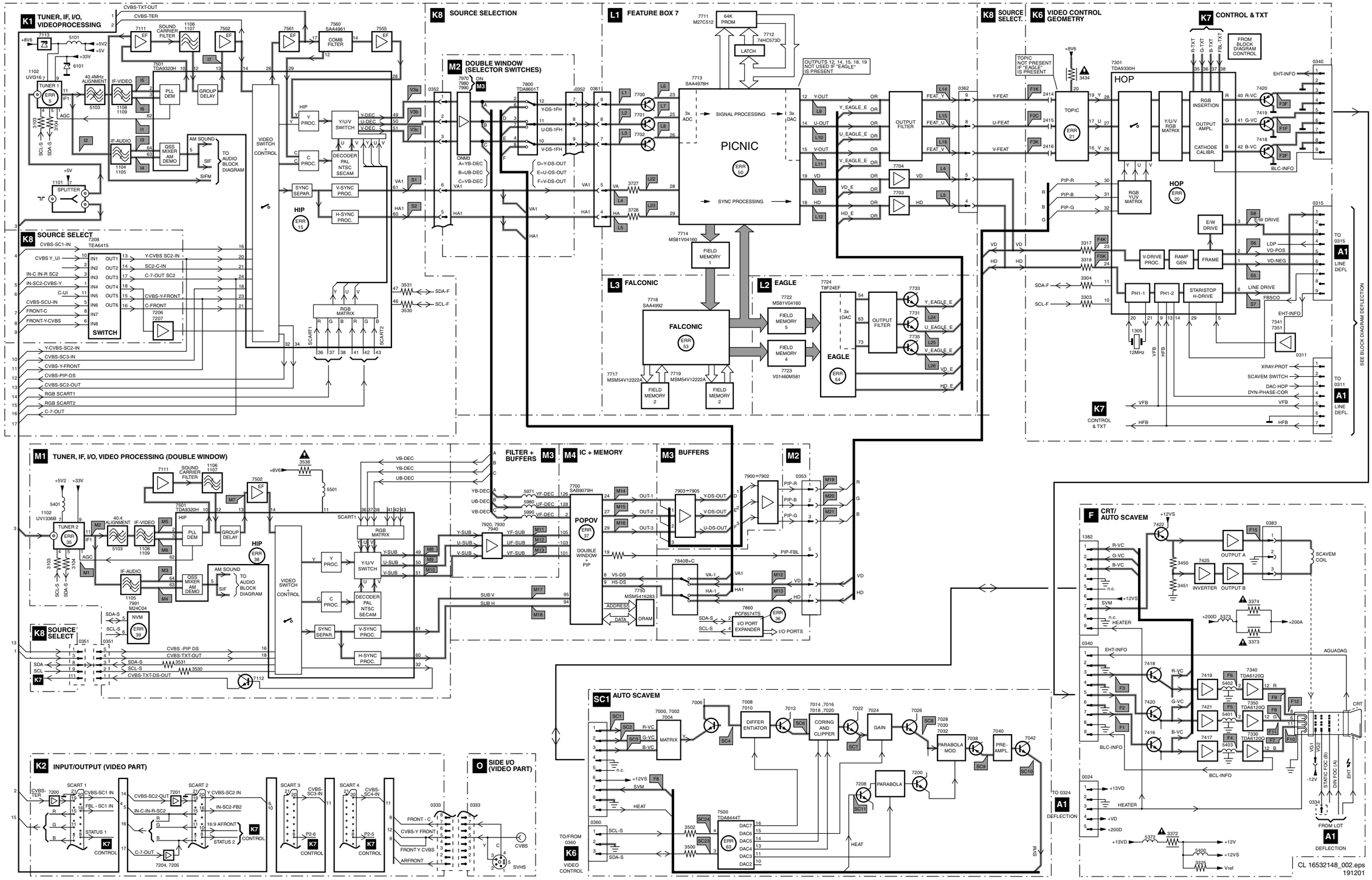

Block Diagram Audio 1 (Exclusive Wireless Audio Details)

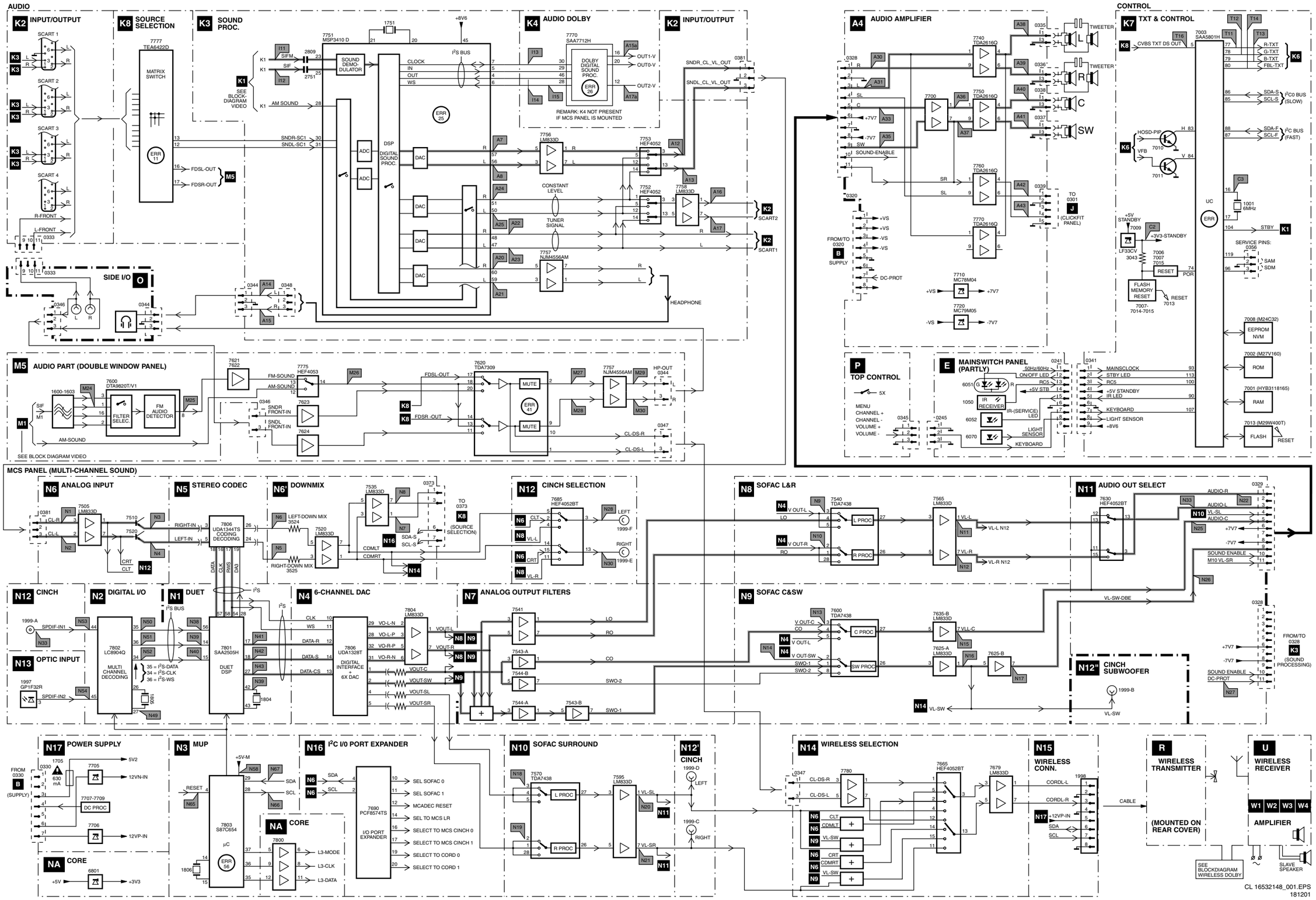

Block Diagram Audio 2 (Wireless Audio Details)

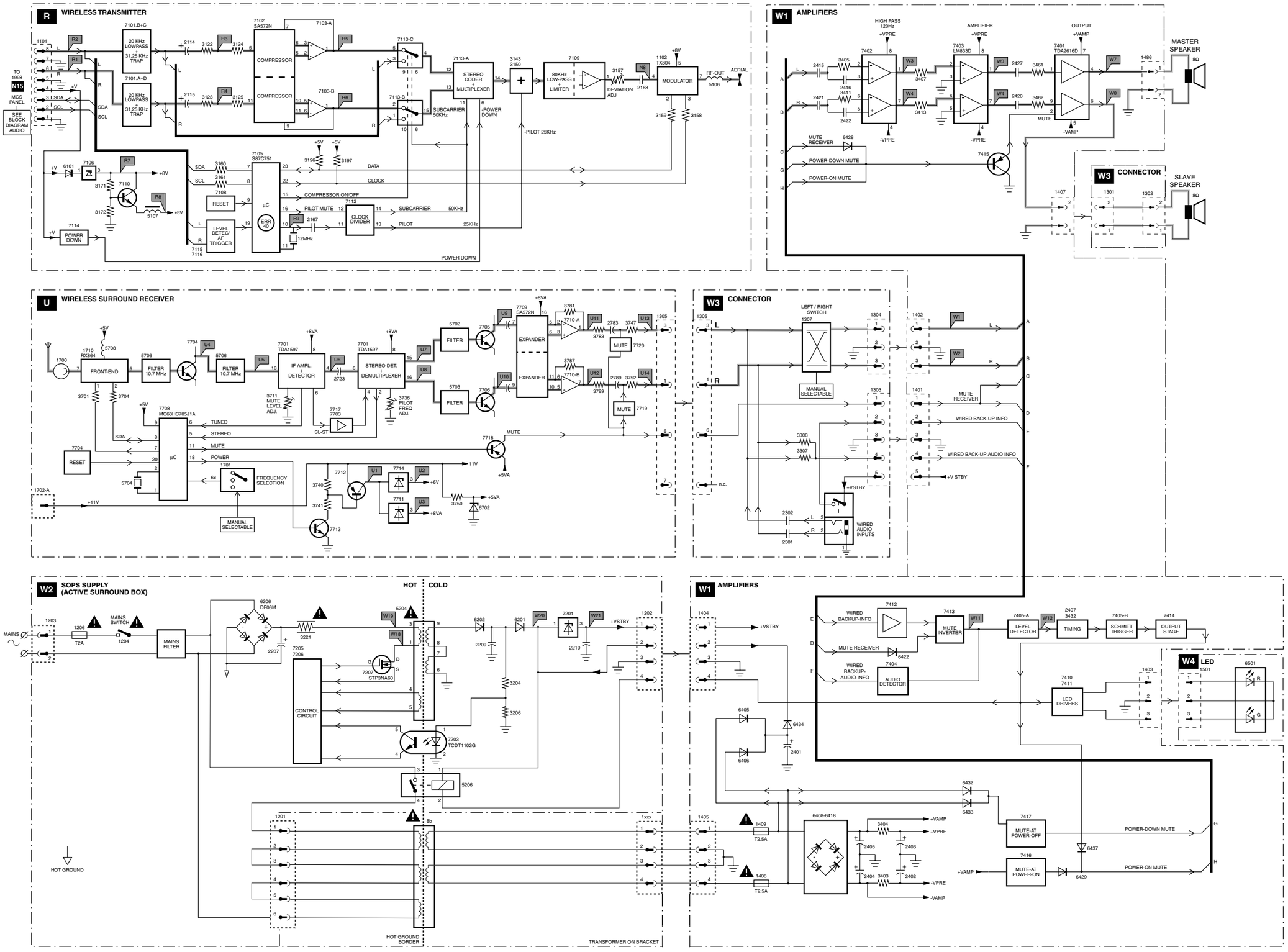

CL 16532148_007.EPS
191201

I²C IC's overview

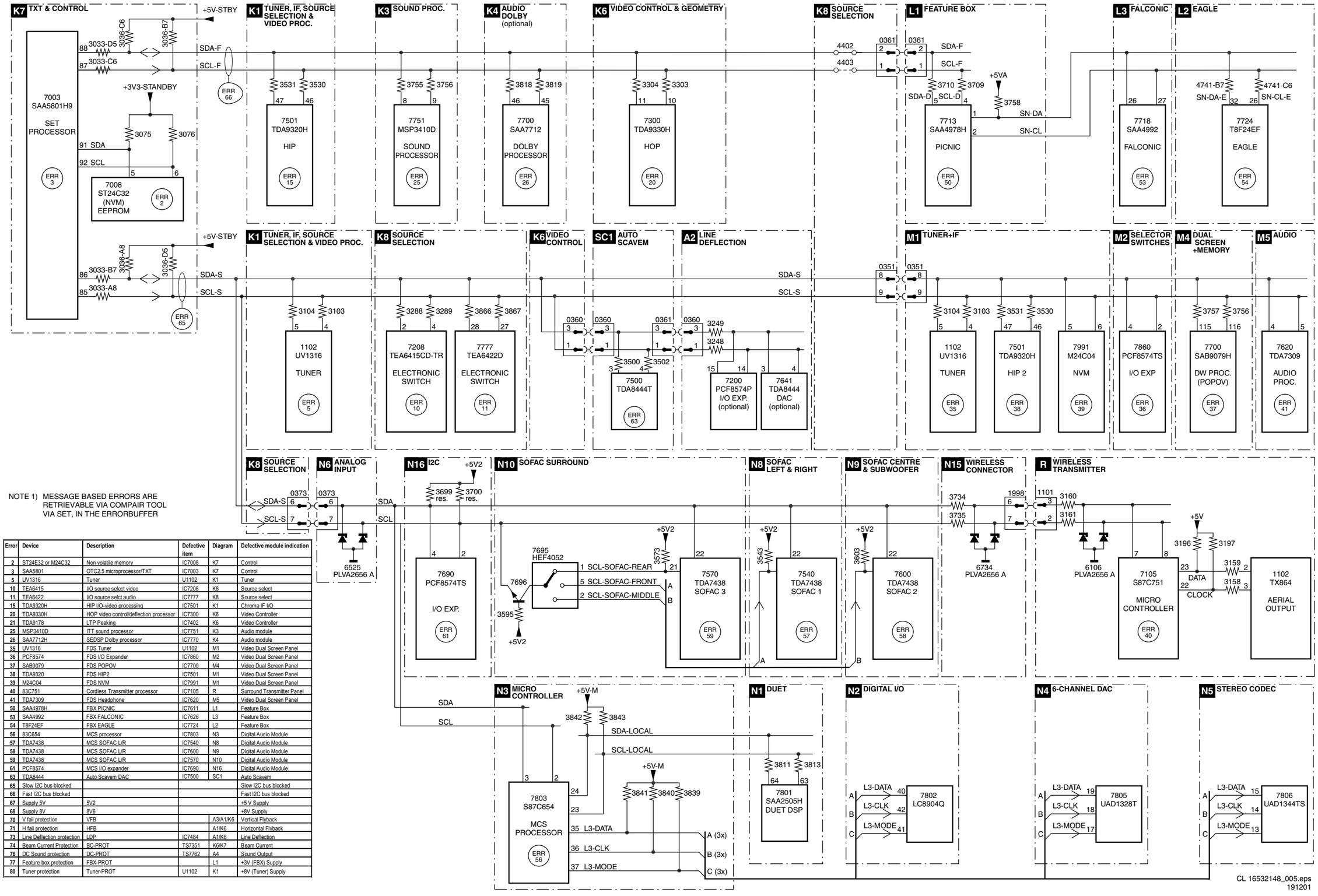

NOTE 1) MESSAGE BASED ERRORS ARE RETRIEVABLE VIA COMPAIR TOOL VIA SET, IN THE ERRORBUFFER

Error	Device	Description	Defective item	Diagram	Defective module indication
2	ST24E32 or M24C32	Non volatile memory	IC7008	K7	Control
3	SAA5801	OTC2.5 microprocessor/TXT	IC7003	K7	Control
5	UV1316	Tuner	U1102	K1	Tuner
10	TEA6415	I/O source select video	IC7208	K8	Source select
11	TEA6422	I/O source selct audio	IC7777	K8	Source select
15	TDA9320H	HIP I/O-video processing	IC7501	K1	Chroma IF I/O
20	TDA9330H	HOP video control/deflection processor	IC7300	K6	Video Controller
21	TDA9178	LTP Peaking	IC7402	K6	Video Controller
25	MSP3410D	ITT sound processor	IC7751	K3	Audio module
26	SAA7712H	SEDSP Dolby processor	IC7770	K4	Audio module
35	UV1316	FDS Tuner	U1102	M1	Video Dual Screen Panel
36	PCF8574	FDS I/O Expander	IC7860	M2	Video Dual Screen Panel
37	SAB9079	FDS POPOV	IC7700	M4	Video Dual Screen Panel
38	TDA9320	FDS HIP2	IC7501	M1	Video Dual Screen Panel
39	M24C04	FDS NVM	IC7991	M1	Video Dual Screen Panel
40	83C751	Cordless Transmitter processor	IC7105	R	Surround Transmitter Panel
41	TDA7309	FDS Headphone	IC7620	M5	Video Dual Screen Panel
50	SAA4978H	FBX PICNIC	IC7611	L1	Feature Box
53	SAA4992	FBX FALCONIC	IC7626	L3	Feature Box
54	T8F24EF	FBX EAGLE	IC7724	L2	Feature Box
56	83C654	MCS processor	IC7803	N3	Digital Audio Module
57	TDA7438	MCS SOFAC L/R	IC7540	N8	Digital Audio Module
58	TDA7438	MCS SOFAC L/R	IC7600	N9	Digital Audio Module
59	TDA7438	MCS SOFAC L/R	IC7570	N10	Digital Audio Module
61	PCF8574	MCS I/O expander	IC7690	N16	Digital Audio Module
63	TDA8444	Auto Scavem DAC	IC7500	SC1	Auto Scavem
65	Slow I2C bus blocked				Slow I2C bus blocked
66	Fast I2C bus blocked				Fast I2C bus blocked
67	Supply 5V	5V2			+5 V Supply
68	Supply 8V	8V6			+8V Supply
70	V fail protection	VFB		A3/A1/K6	Vertical Flyback
71	H fail protection	HFB		A1/K6	Horizontal Flyback
73	Line Deflection protection	LDP	IC7484	A1/K6	Line Deflection
74	Beam Current Protection	BC-PROT	TS7351	K6/K7	Beam Current
76	DC Sound protection	DC-PROT	TS7762	A4	Sound Output
77	Feature box protection	FBX-PROT		L1	+3V (FBX) Supply
80	Tuner protection	Tuner-PROT	U1102	K1	+8V (Tuner) Supply

Supply Lines Overview (Part 1)

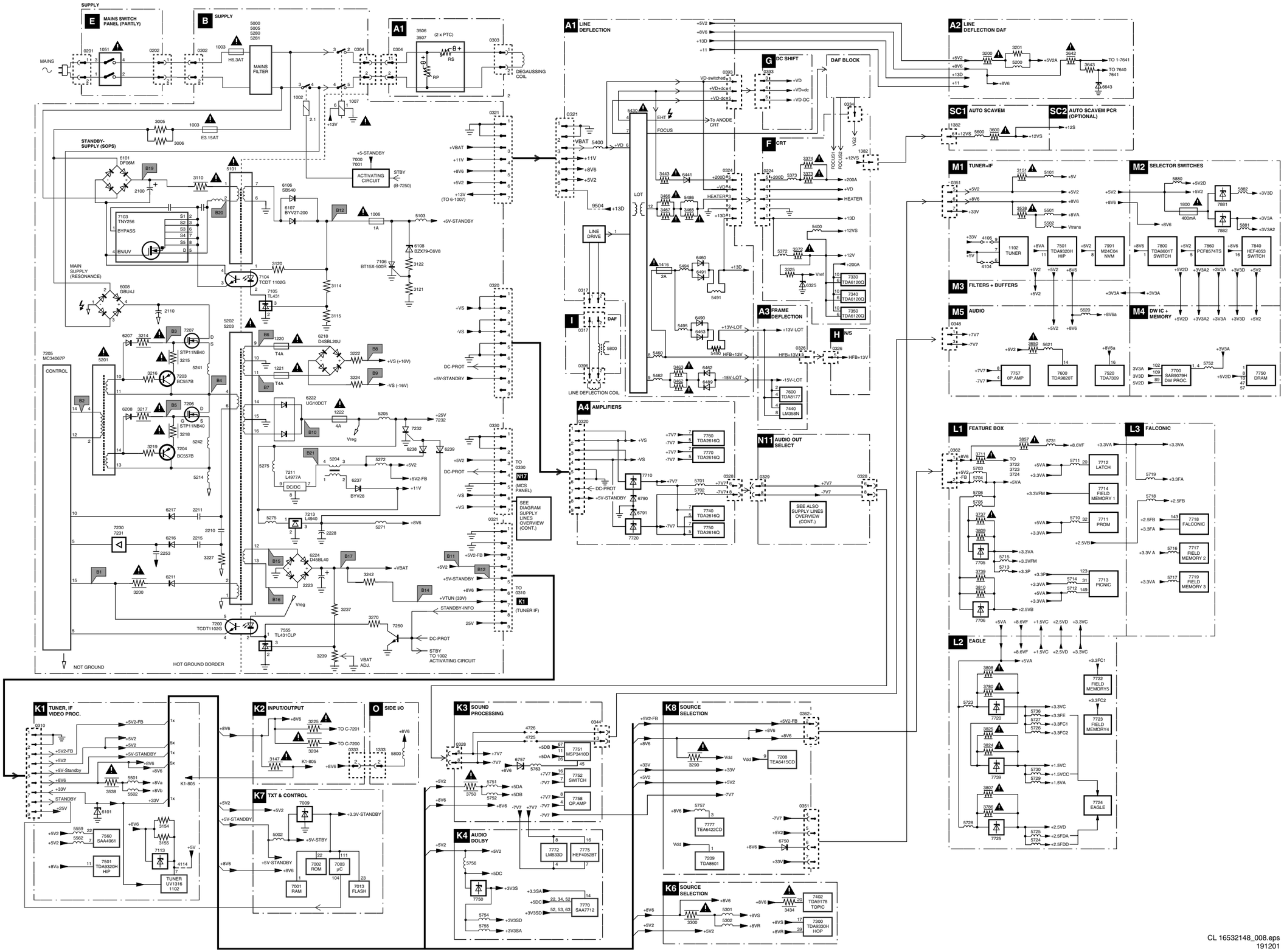

CL 16532148_008.eps
191201

Supply Lines Overview (Part 2)

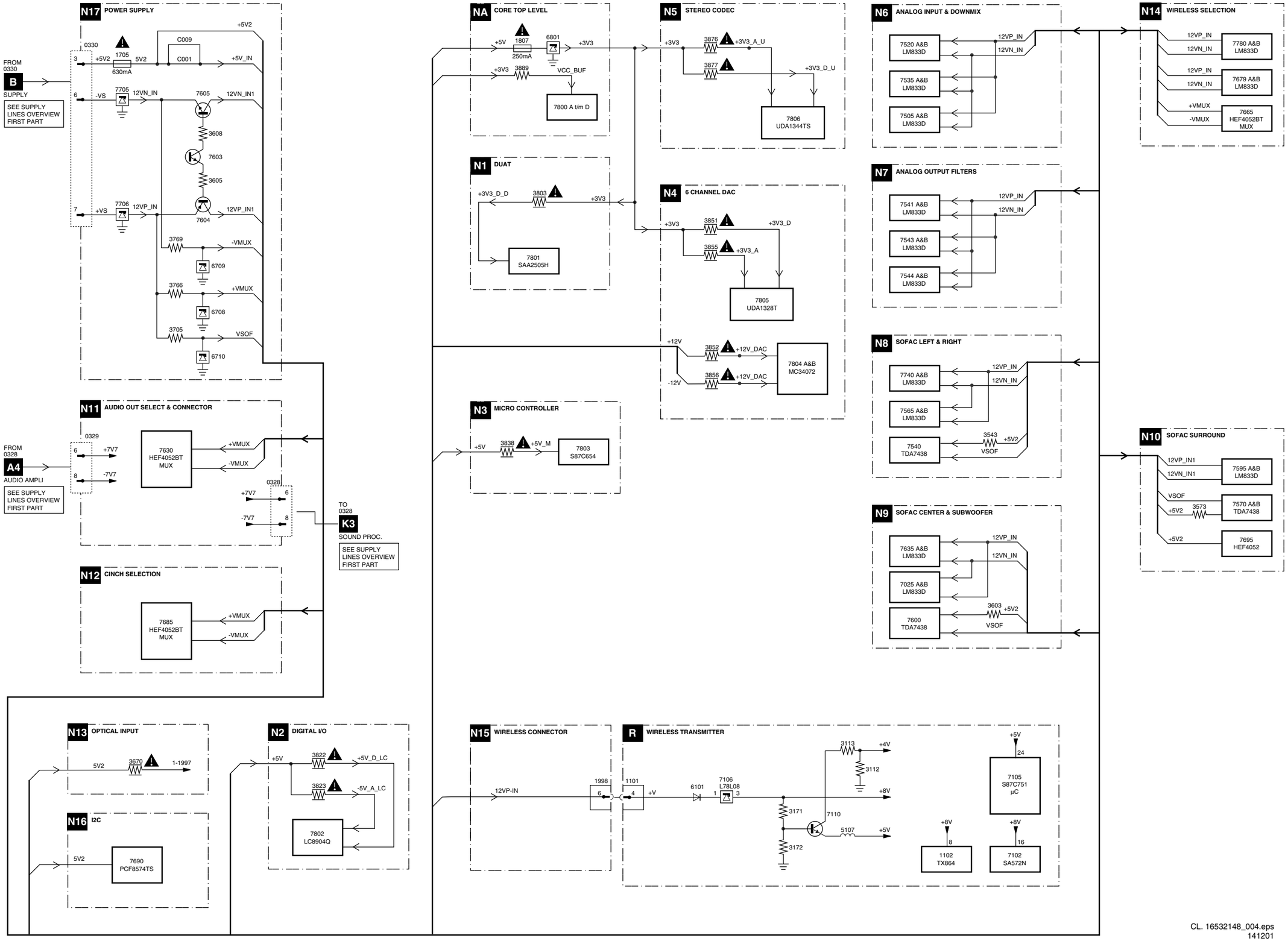

CL. 16532148_004.eps
141201

CRT / SCAVEM panel (F) (Copper Side)

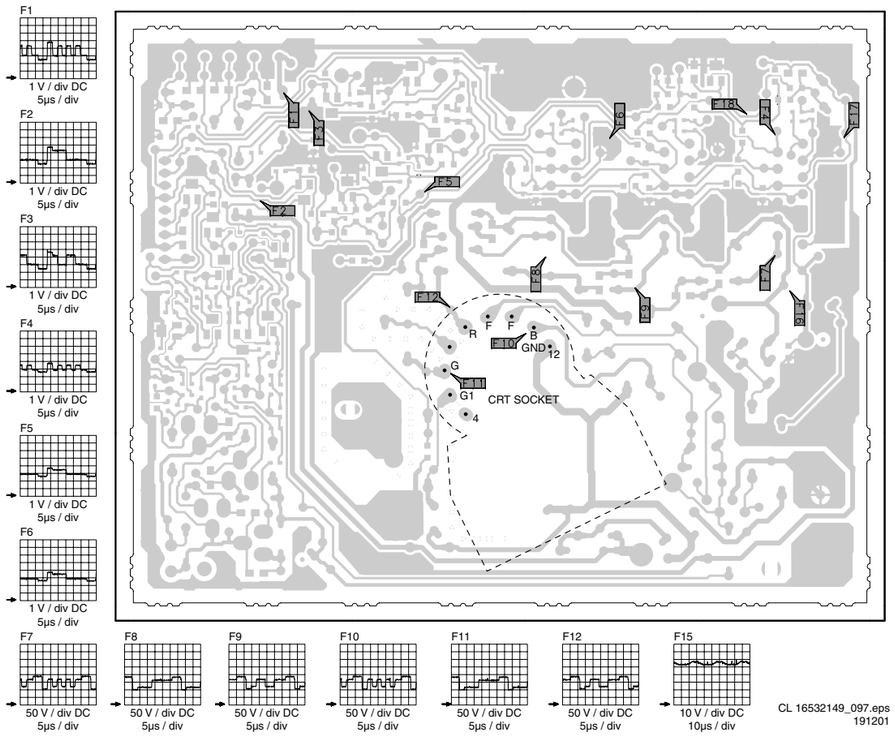

Auto SCAVEM Panel (SC) (Copper Side)

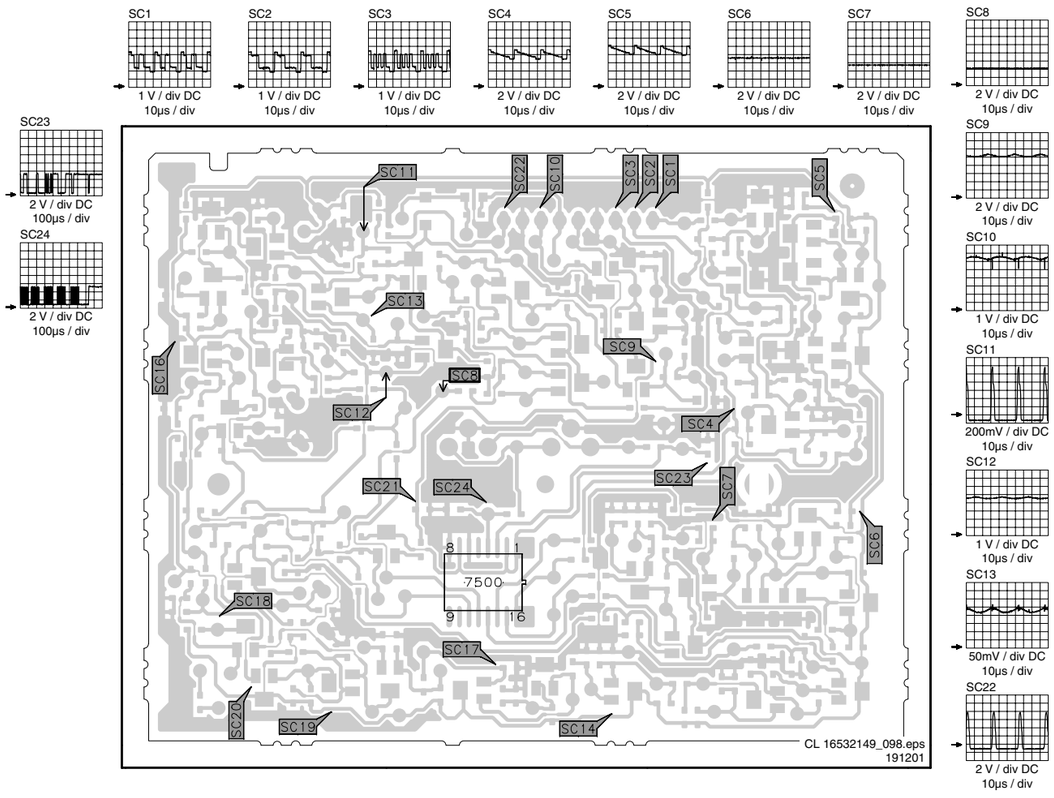

Small signal panel (K)

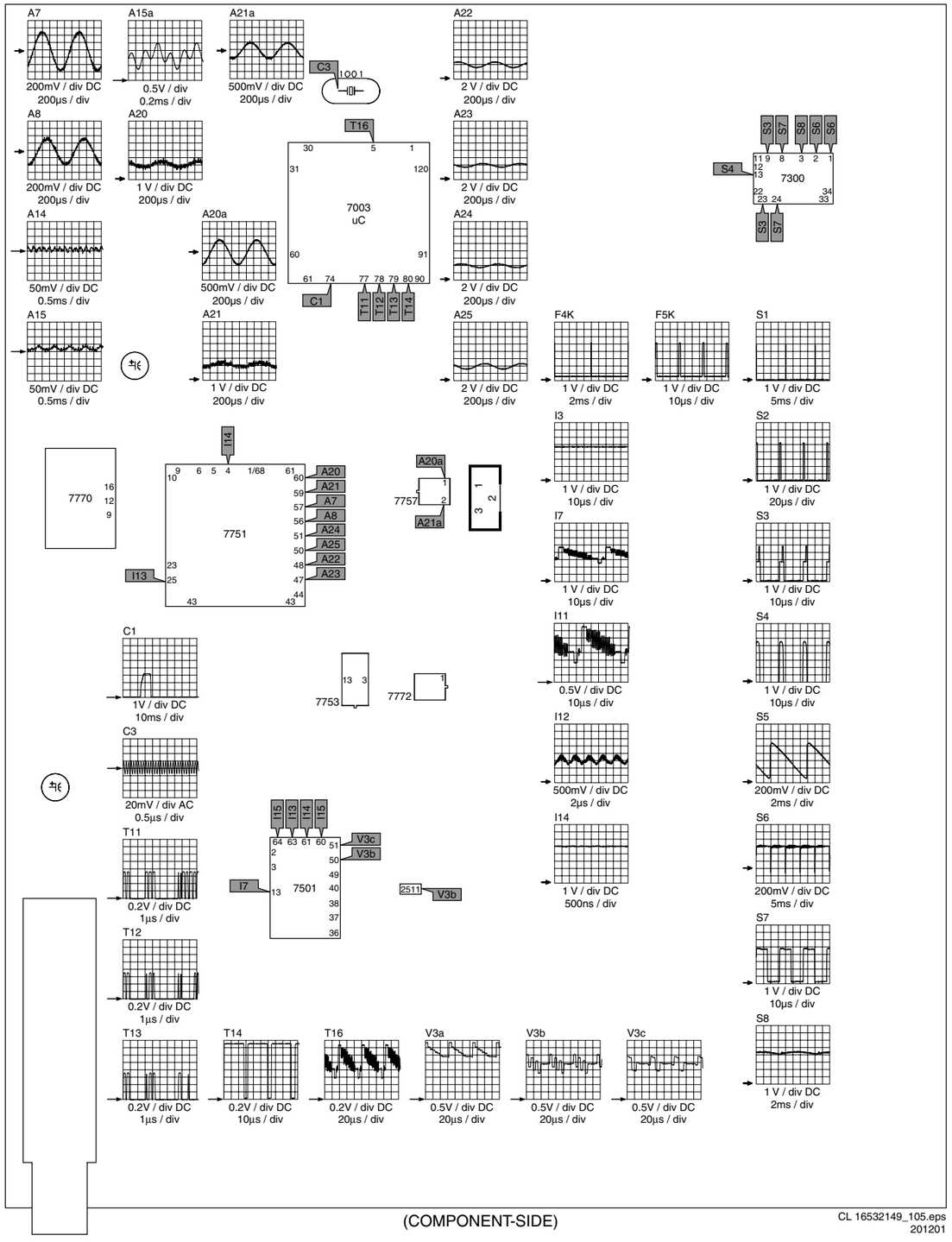

Large Signal Panel (A)

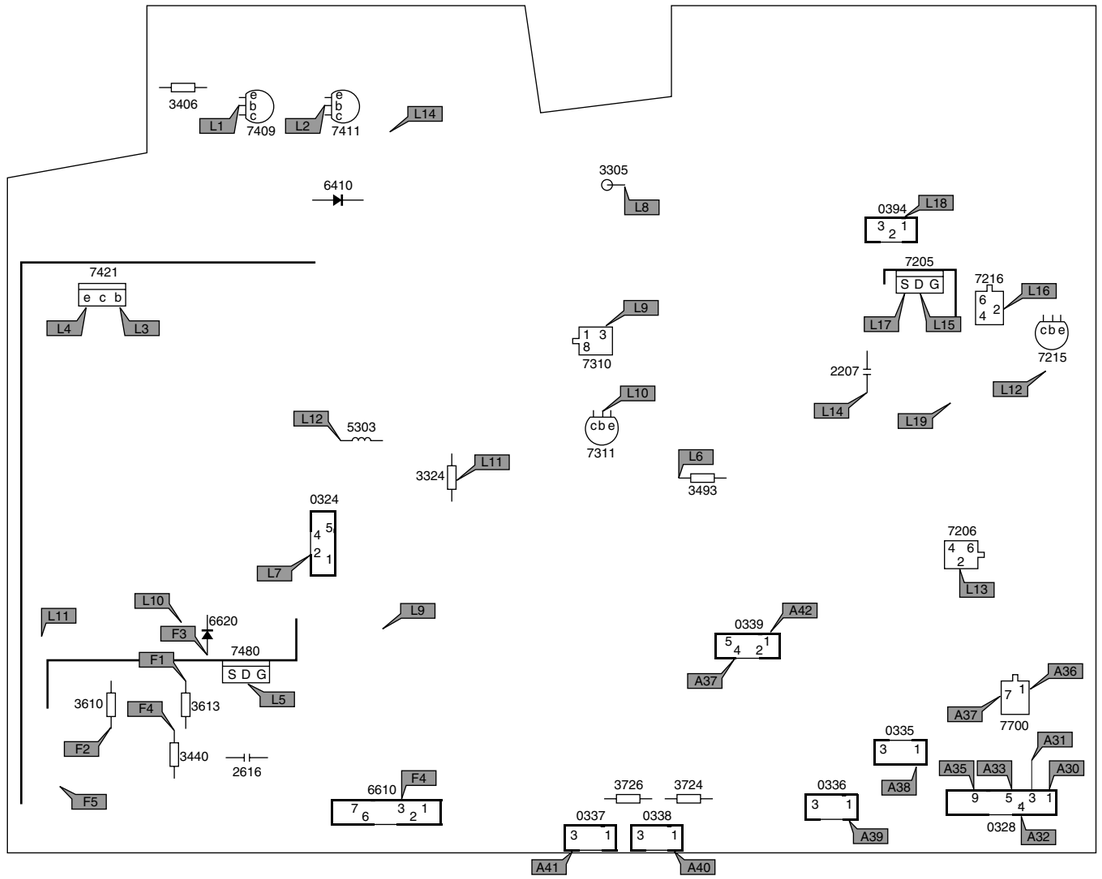

COPPERSIDE

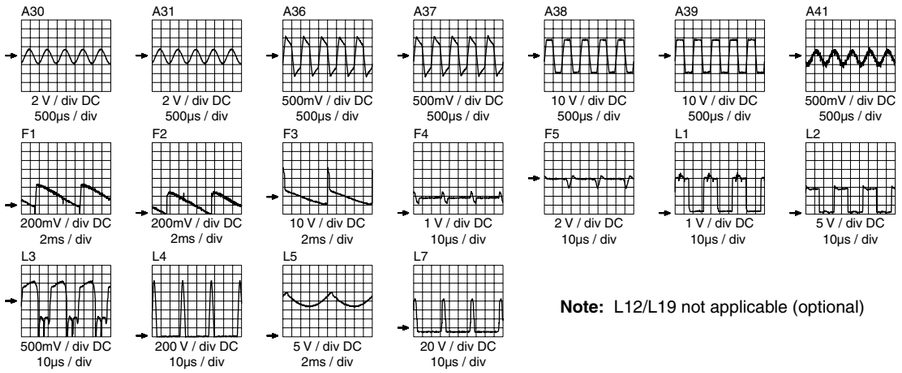

Note: L12/L19 not applicable (optional)

CL 16532149_099.eps
201201

Top Supply (B)

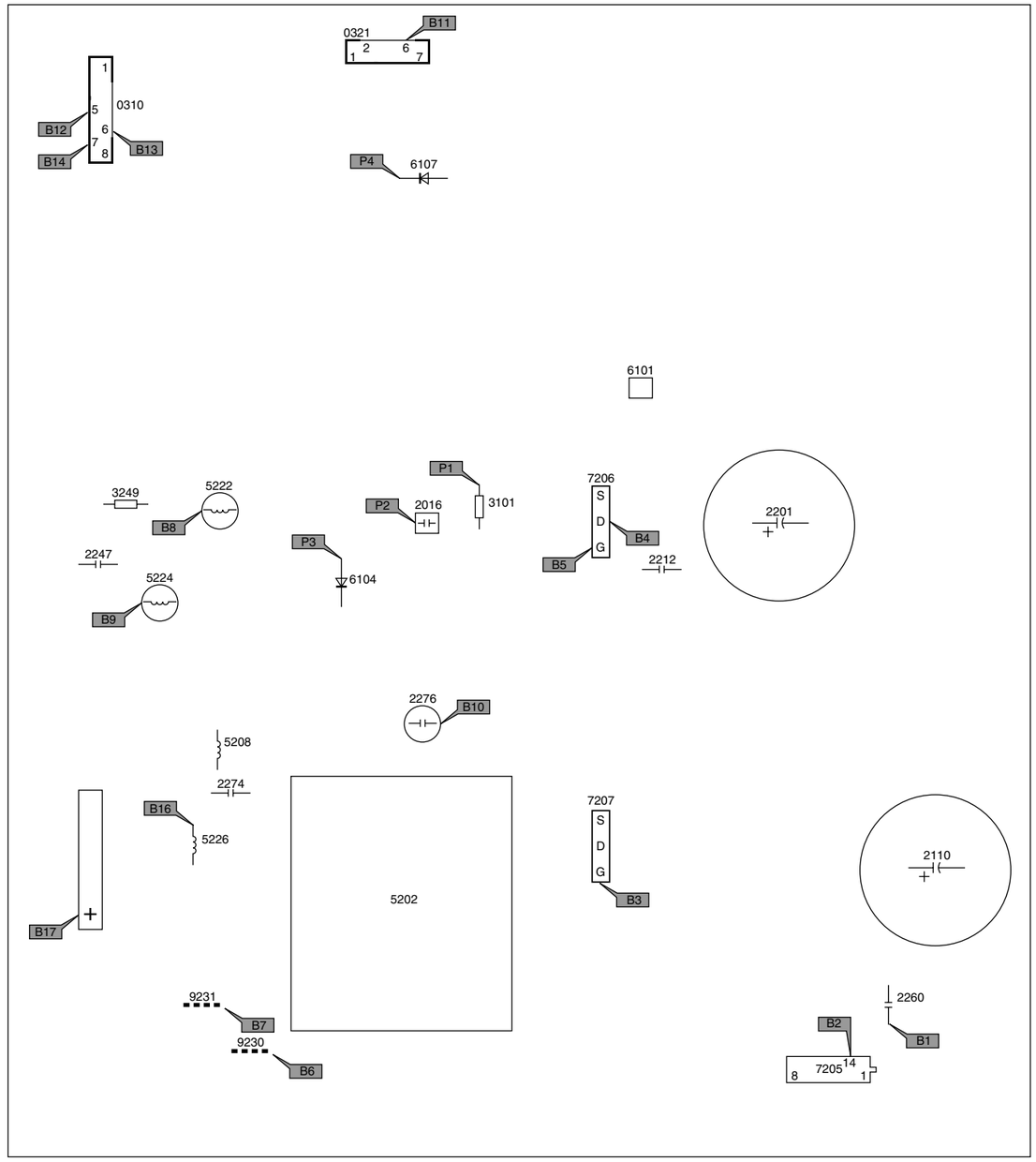

COPPERSIDE

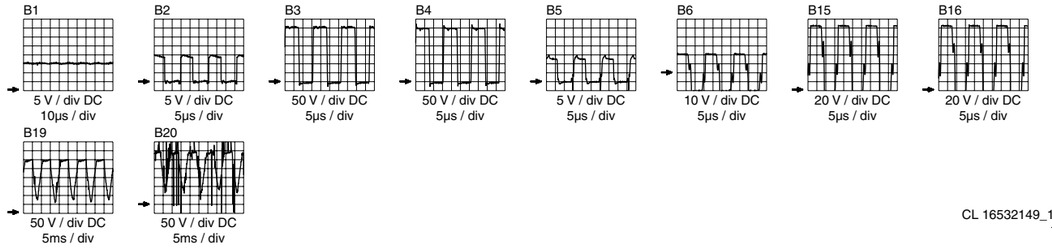

CL 16532149_106.eps
191201

MCS Module (N)

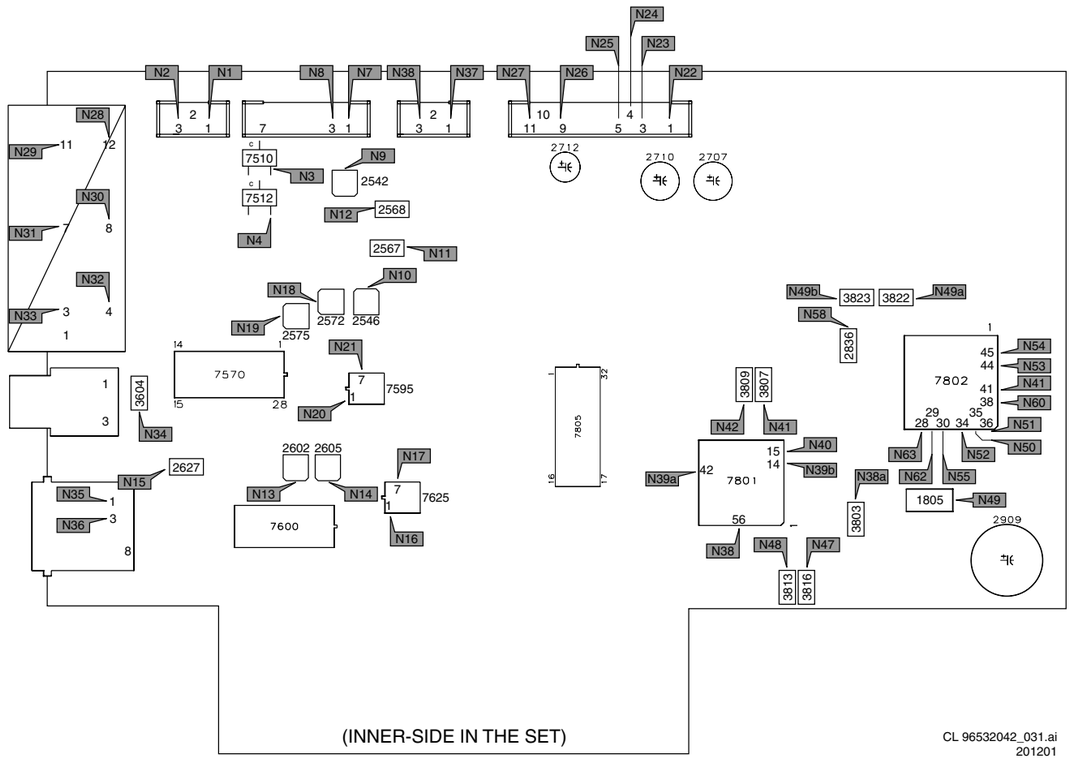

(INNER-SIDE IN THE SET)

CL 96532042_031.ai
201201

FDS Module (M)

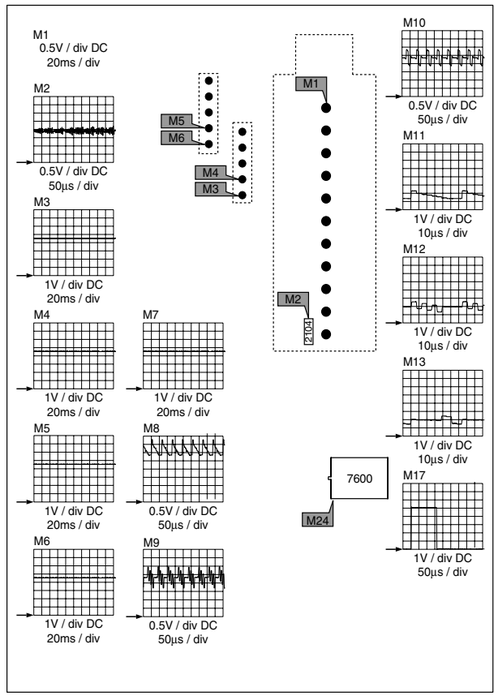

(COPPER -SIDE)

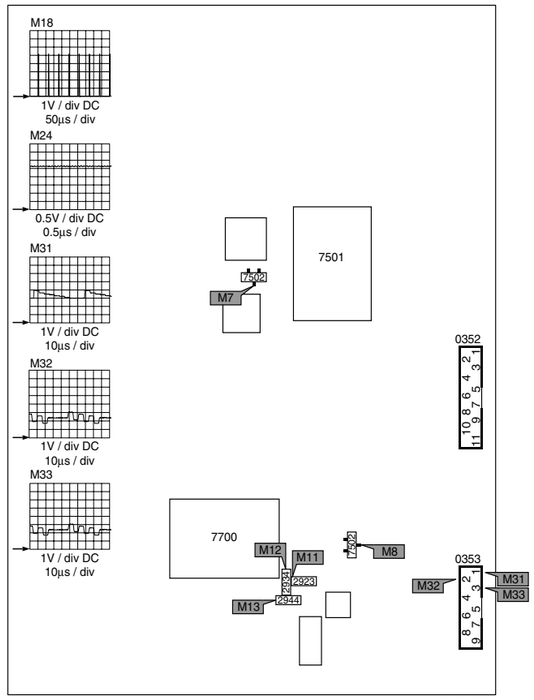

(COMPONENT-SIDE)

CL 96532042_59c
201201

MCS Module (N)

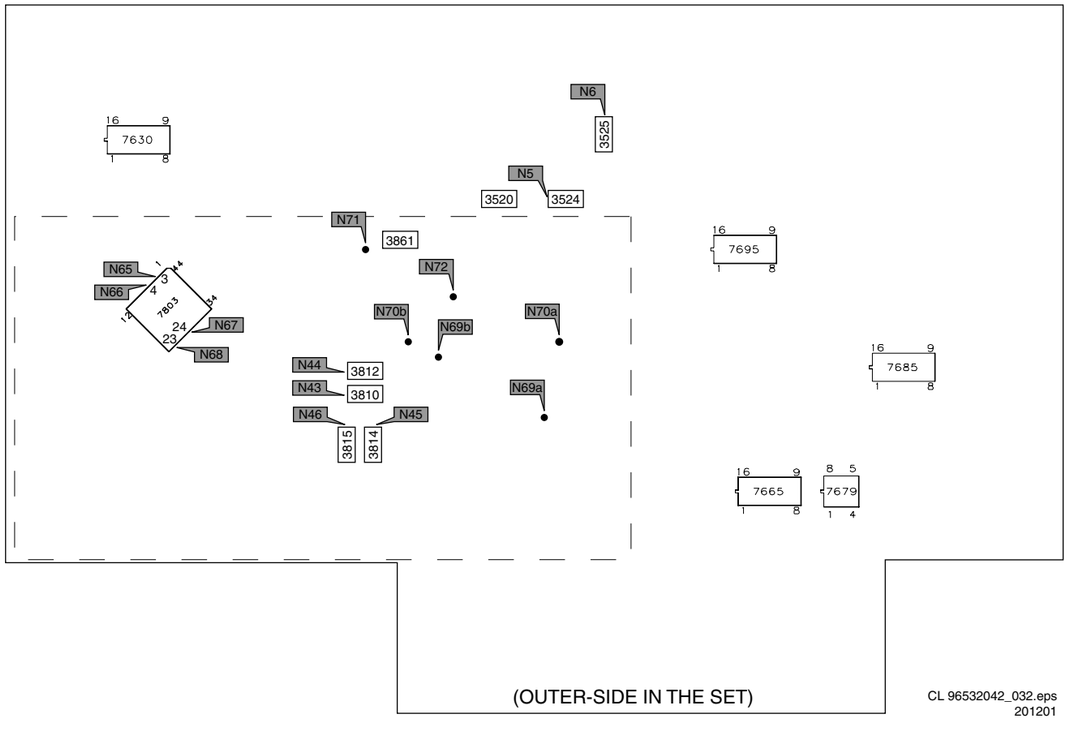

(OUTER-SIDE IN THE SET)

CL 96532042_032.eps
201201

FBX Panel (L) (Copper Side)

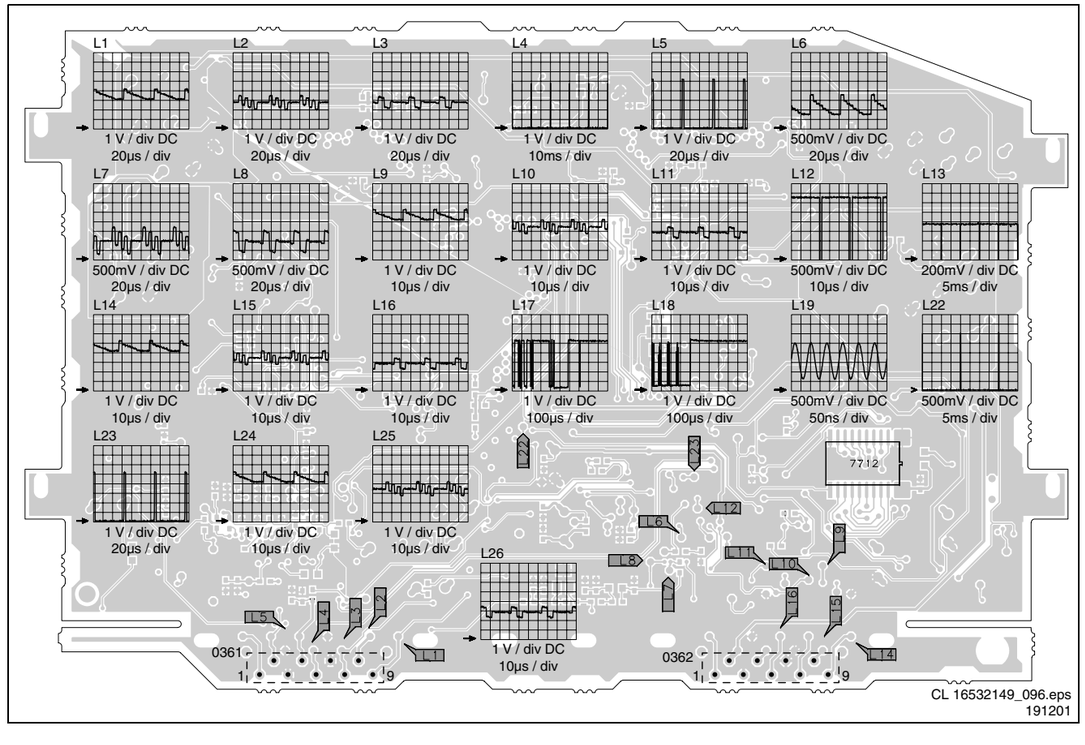

CL 16532149_096.eps
191201

Surround Transmitter (R)

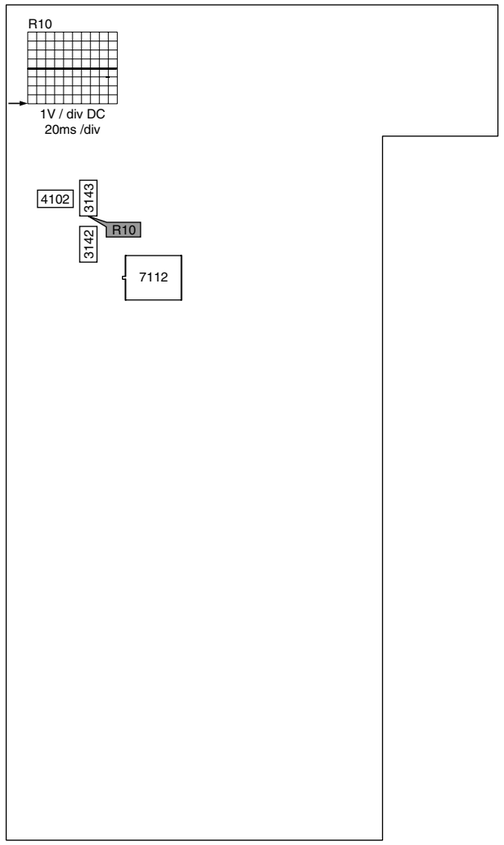

(COPPER-SIDE)

CL 96532042_056.eps
201201

Surround Transmitter (R)

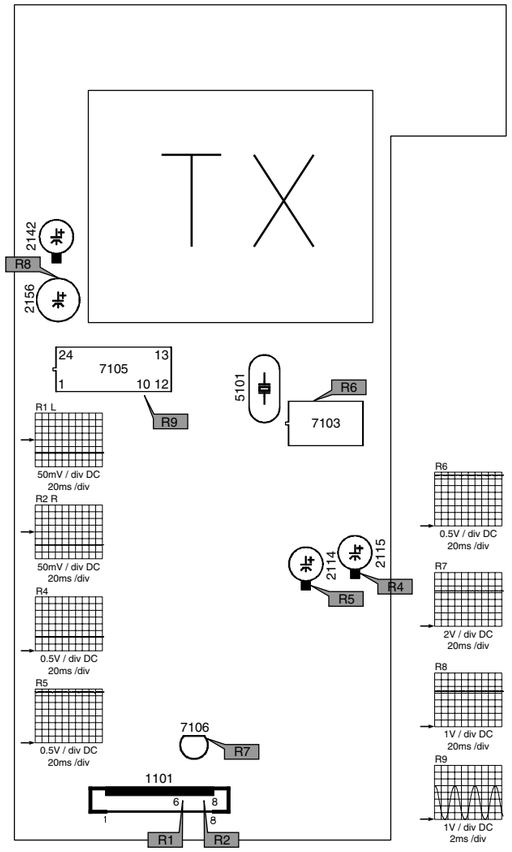

(COMPONENT-SIDE)

CL 96532042_057.eps
211201

Active Surround Box Amplifier (W1)

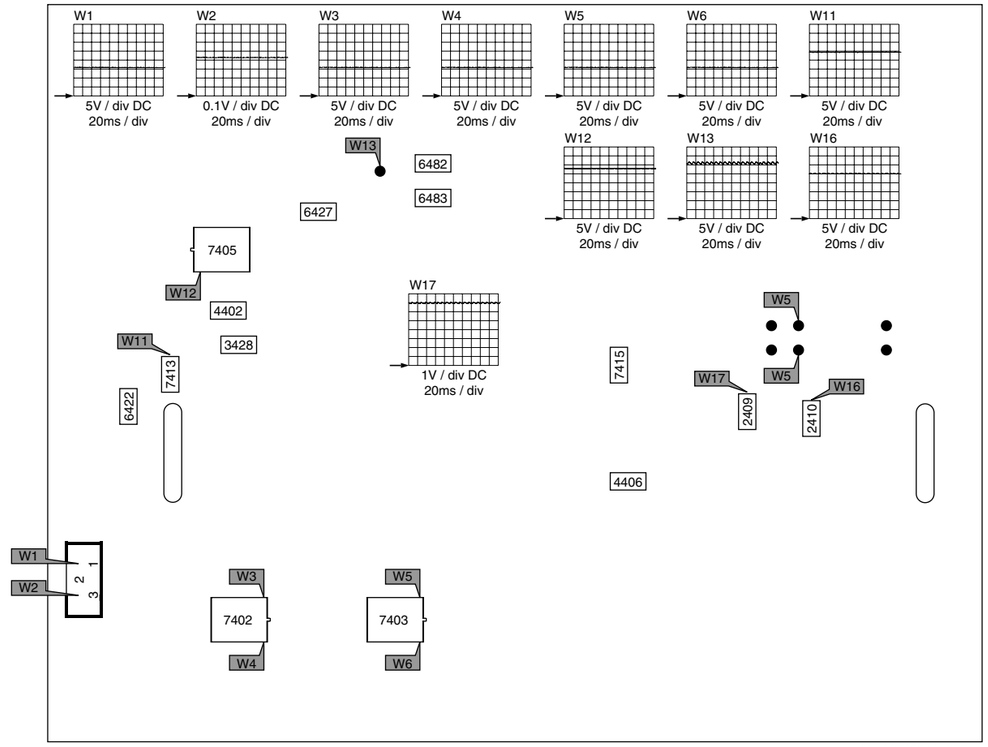

(COPPER -SIDE)

CL 96532042_055.ai
201201

Surround Receiver (U)

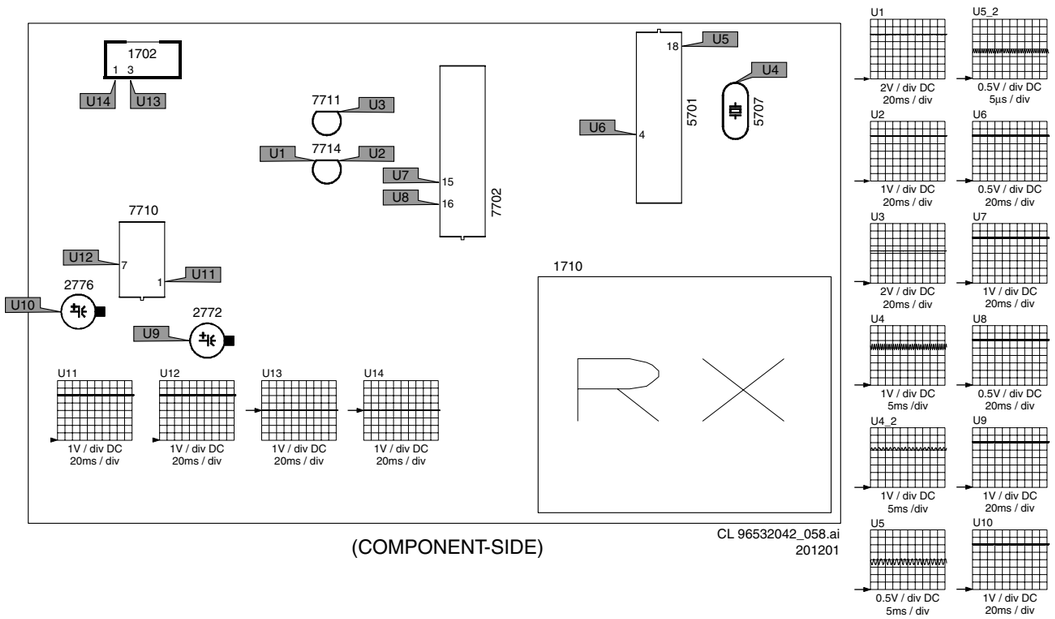

(COMPONENT-SIDE)

CL 96532042_058.ai
201201

Active Surround Box Supply (W2)

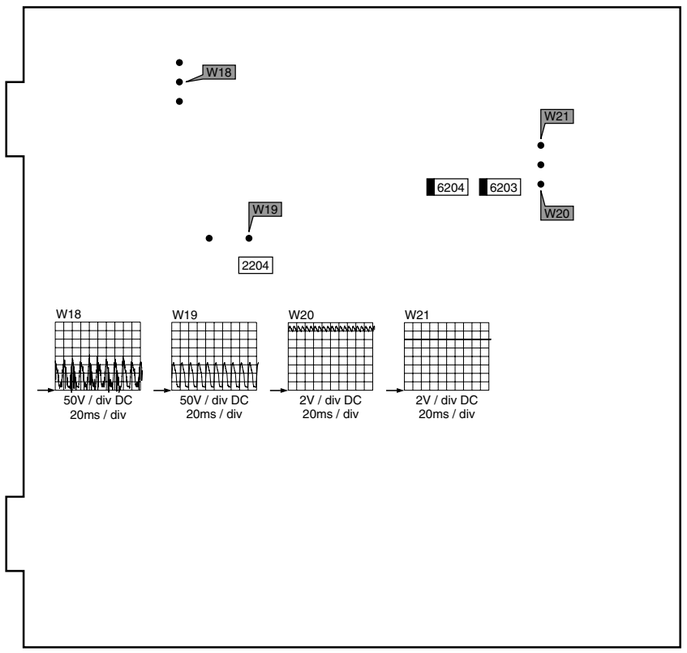

(COPPER-SIDE)

CL 96532042_054.eps
201201

7. Circuit Diagrams and PWB Layouts

Large Signal Panel: Line Deflection

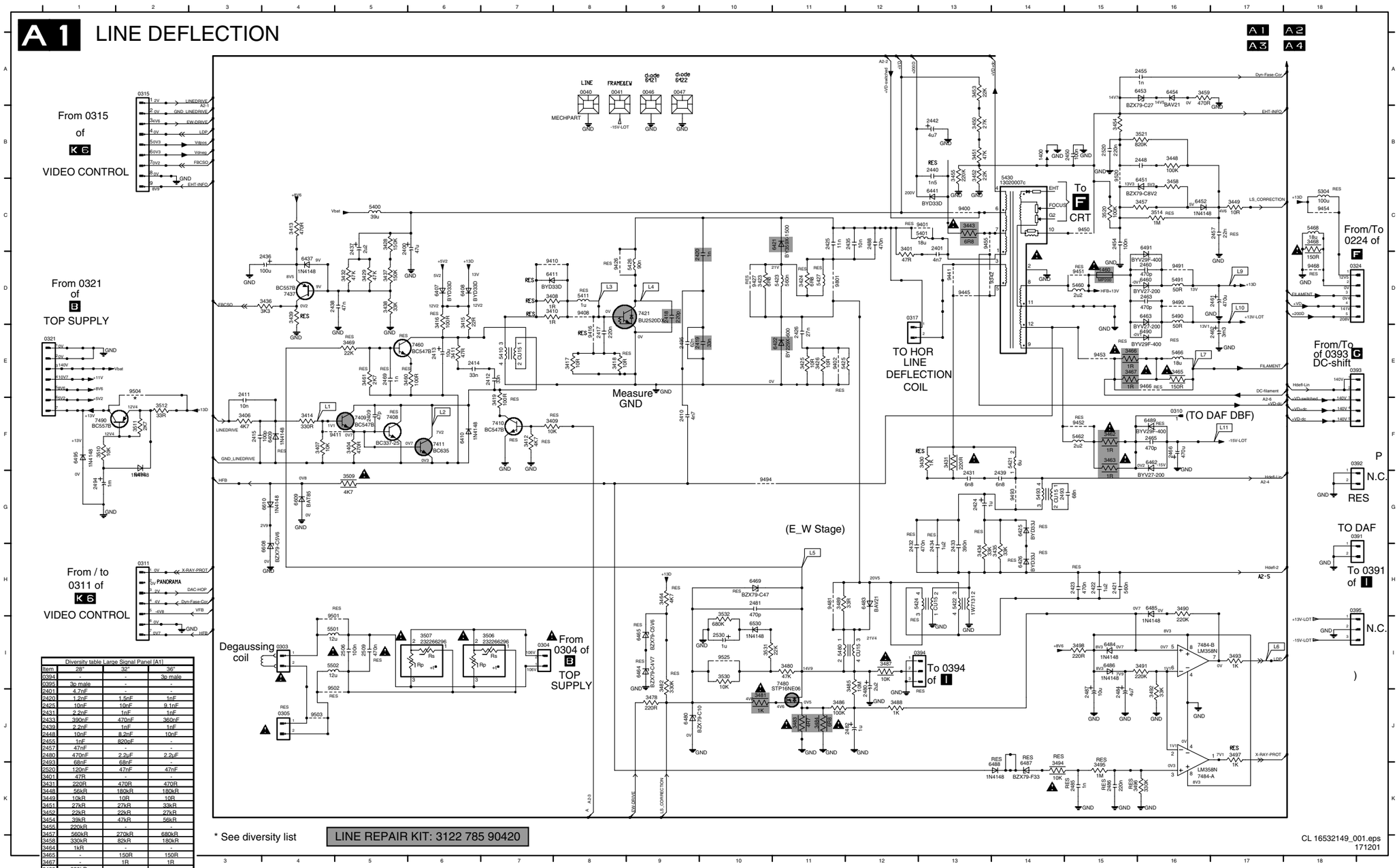

Diversity table Large Signal Panel [A1]			
Item	28*	32*	36*
0394	-	-	-
0395	3p male	-	3p male
2401	4.7nF	-	-
2420	1.2nF	1.5nF	1nF
2425	10nF	10nF	9.1nF
2431	2.2nF	1nF	1nF
2433	390nF	470nF	360nF
2439	2.2nF	1nF	1nF
2448	10nF	8.2nF	10nF
2455	1nF	820pF	-
2457	47nF	-	-
2480	470nF	2.2uF	2.2uF
2493	68nF	68nF	-
2520	120nF	47nF	47nF
3401	47R	-	-
3431	220R	470R	470R
3448	56kR	180kR	180kR
3449	10kR	10R	10R
3451	27kR	27kR	33kR
3452	22kR	22kR	27kR
3454	39kR	47kR	56kR
3456	220kR	-	-
3457	560kR	270kR	680kR
3458	330kR	82kR	180kR
3464	1kR	-	-
3465	-	150R	150R
3467	-	1R	1R
3482	330kR	-	-
3484	3R3	4R7	6R8
3485	7.5MR	10MR	10MR
3487	-	-	10kR
3489	-	-	33R
3520	75kR	100kR	-
3521	1MR	820kR	820kR
3531	47kR	22kR	22kR
3532	680kR	820kR	820kR
5401	18uH	-	-
5421	3128 138 56152	3128 138 57411	3128 138 56611
5430	8204 000 75001	3128 138 20931	3128 138 20931
5466	18uH	15uH	15uH
5468	18uH	10uH	10uH
5490	-	Bead	-
5493	3128 138 38881	3128 138 38881	-
6483	-	-	BAV21
9401	-	Jumper	Jumper
9481	Jumper	Jumper	-
9490	Jumper	-	Jumper
9493	-	-	Jumper

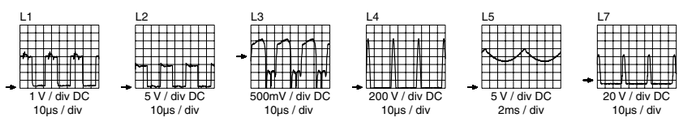

Large Signal Panel: Line Deflection (Continued)

0049 C13	2200 D2	3200 D1	3218 E8	3341 D11	3346 E13	3353 D13	3642 C3	3649 C8	6248 G3	6641 B4	6646 B8	7340 C12	7640-B A7
0055 E10	2217 E9	3201 D2	3219 F8	3342 E11	3347 F13	3354 E14	3643 C4	3650 B8	6249 G4	6642 B5	7200 F4	7341 E11	7641 C4
0327 B3	2340 D11	3204 F6	3248 F3	3343 E11	3348 D11	3355 E14	3646 C6	3651 C8	6340 D13	6643 C4	7215 F7	7342 E12	7642 B8
0329 B3	2341 D13	3215 E7	3249 G3	3344 E13	3349 D12	3640 B5	3647 C6	5200 D2	6341 E13	6644 C6	7216 E7	7344 D14	9340 D11
0360 F1	2640 C3	3217 E8	3340 D12	3345 D13	3350 D13	3641 B5	3648 B8	6217 F8	6640 B4	6645 C6	7217 E9	7640-A A6	9341 D11

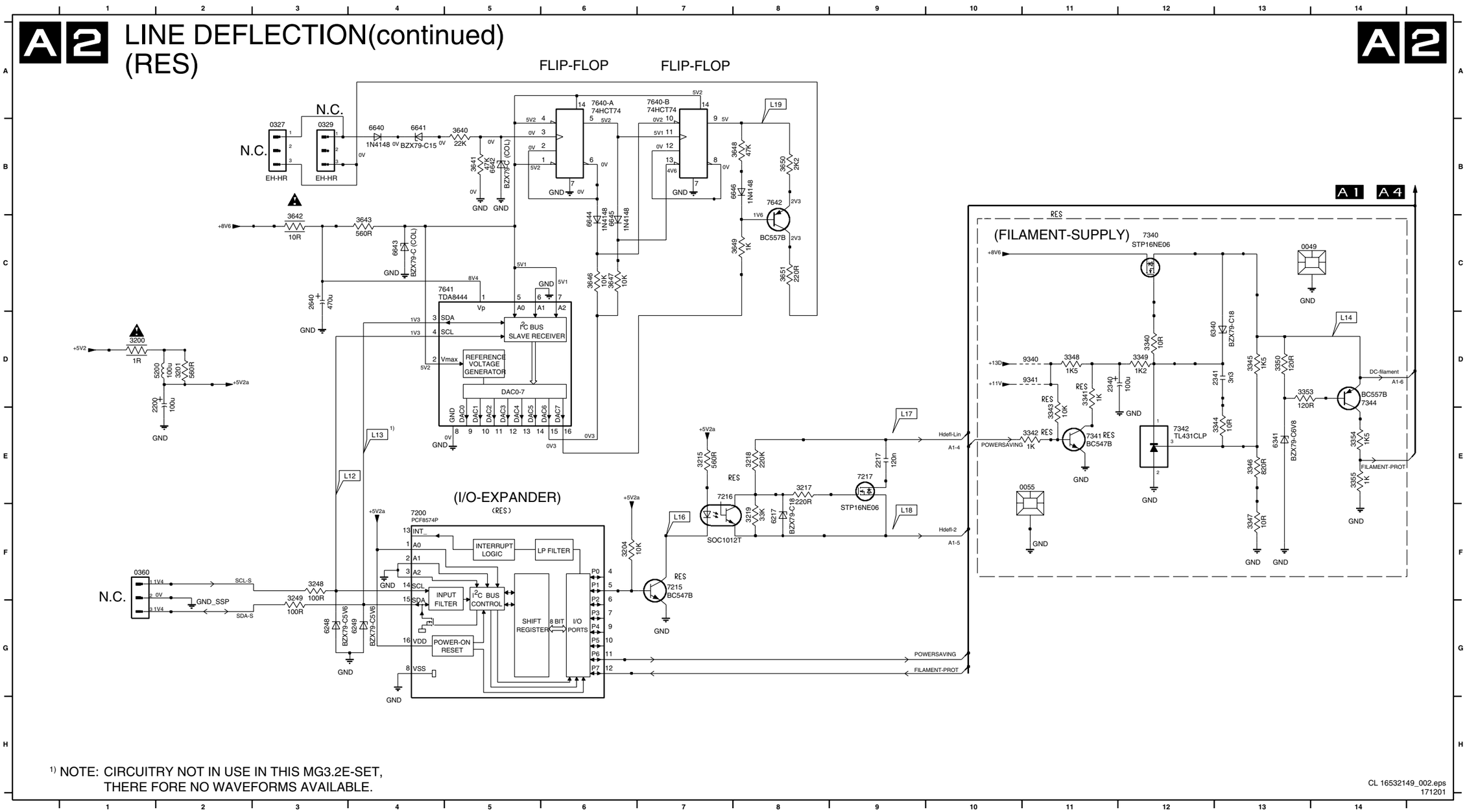

1) NOTE: CIRCUITRY NOT IN USE IN THIS MG3.2E-SET, THERE FORE NO WAVEFORMS AVAILABLE.

Large Signal Panel: Frame Deflection

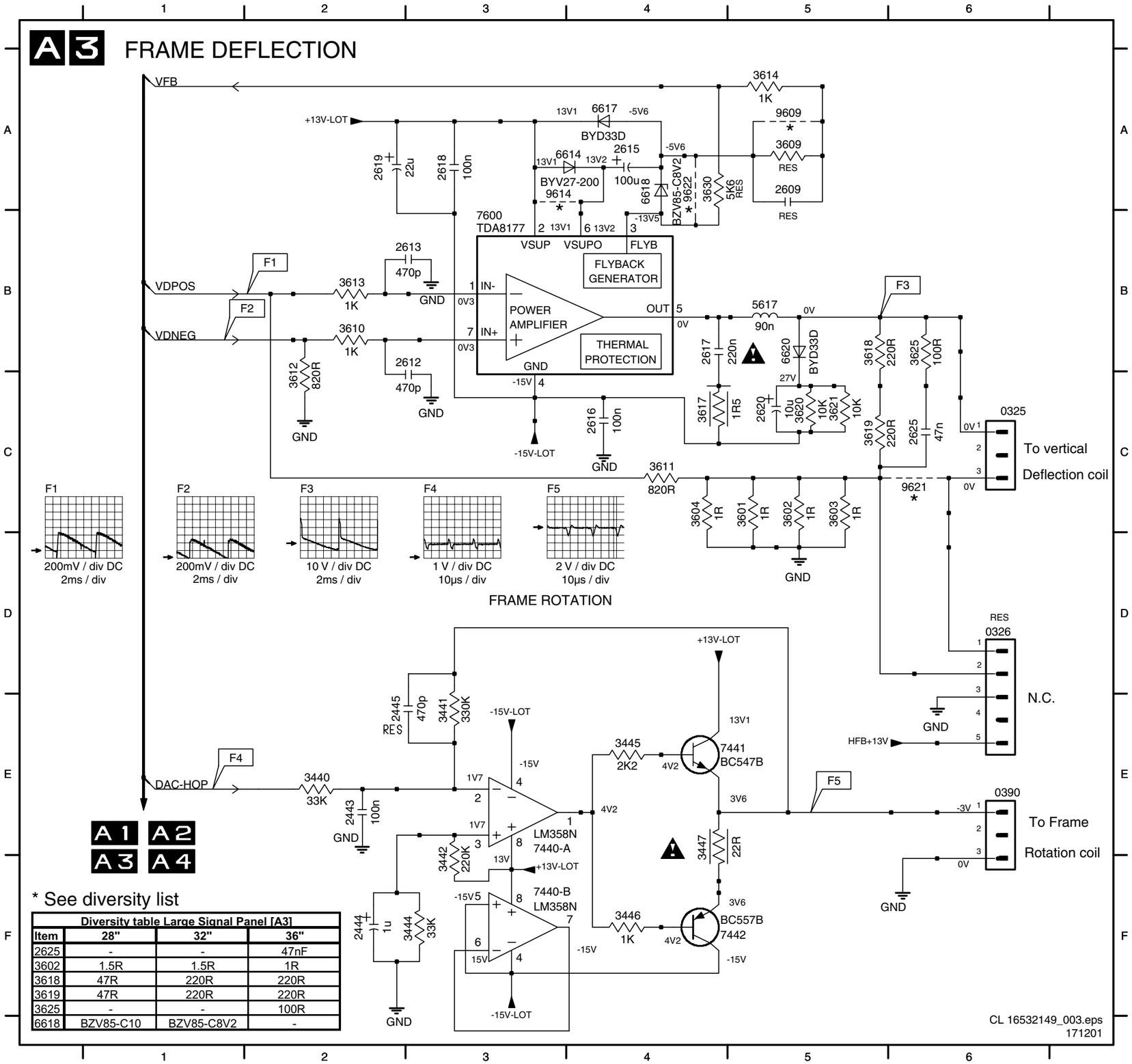

Diversity table Large Signal Panel [A3]			
Item	28"	32"	36"
2625	-	-	47nF
3602	1.5R	1.5R	1R
3618	47R	220R	220R
3619	47R	220R	220R
3625	-	-	100R
6618	BZV85-C10	BZV85-C8V2	-

0325 C6
0326 D6
0390 E6
2443 E2
2444 F2
2445 E2
2609 A5
2612 B3
2613 B3
2615 A4
2616 C4
2617 B4
2618 A3
2619 A2
2620 C5
2625 C6
3440 E2
3441 E3
3442 F3
3444 F3
3445 E4
3446 F4
3447 E4
3601 C5
3602 C5
3603 C5
3604 C4
3609 A5
3610 B2
3611 C4
3612 C2
3613 B2
3614 A5
3617 C4
3618 B5
3619 C5
3620 C5
3621 C5
3625 B6
3630 A4
5617 B5
6614 A4
6617 A4
6618 A4
6620 B5
7440-A E3
7440-B F3
7441 E4
7442 F4
7600 B3
9609 A5
9614 A3
9621 C6
9622 A4

Large Signal Panel: Audio Amplifiers

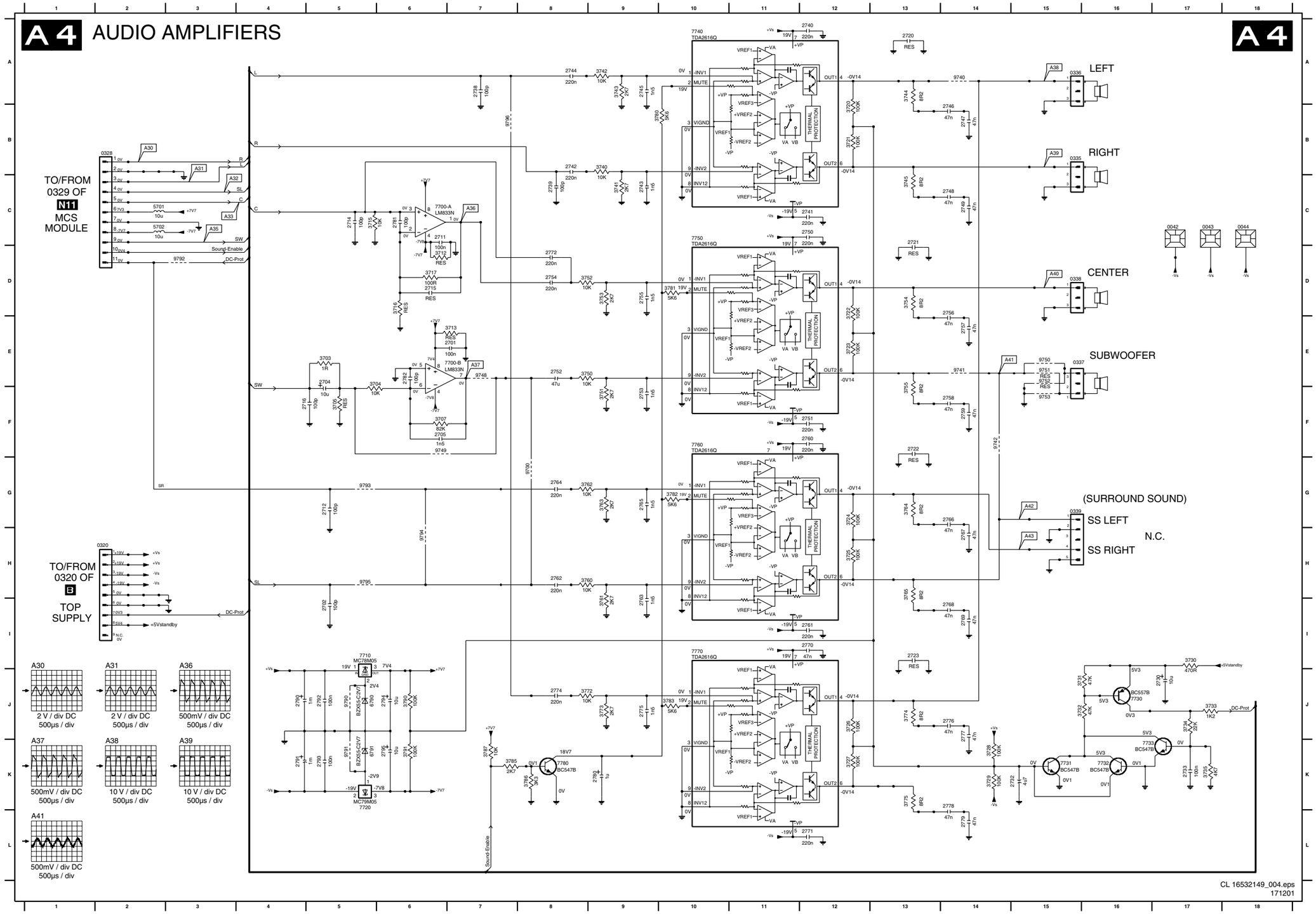

0042 C17	2768 I14	3755 F13	
0043 C17	2769 I14	3760 H8	
0044 C18	2770 I12	3761 I9	
0320 H2	2771 L12	3762 G8	
0328 B2	2772 D8	3763 G9	
0335 B15	2774 J8	3764 G13	
0336 A15	2775 J9	3765 H13	
0337 E15	2776 J14	3772 J8	
0338 D15	2777 J14	3773 J9	
0339 G15	2778 K14	3774 J13	
2701 E7	2779 L14	3775 K13	
2702 I5	2780 K9	3780 B10	
2704 E5	2781 C6	3781 D10	
2705 F6	2782 E6	3782 G10	
2711 C6	2790 J4	3783 J10	
2712 G5	2791 K4	3785 K7	
2714 C5	2792 J5	3786 K8	
2715 D6	2793 K5	3787 K7	
2716 F4	2794 J6	3790 J6	
2720 A13	2795 K6	3791 K6	
2721 C13	3703 E5	5701 C2	
2722 F13	3704 E5	5702 C2	
2723 I13	3705 F5	6790 J5	
2730 J17	3707 F6	6791 K5	
2732 K15	3712 D6	7700-A C6	
2733 K17	3713 E7	7700-B E6	
2738 A7	3715 C5	7710 I5	
2739 C8	3716 D6	7720 K5	
2740 A12	3717 D6	7730 J16	
2741 C12	3720 B12	7731 K15	
2742 B8	3721 B12	7732 K16	
2743 C9	3722 D12	7733 K17	
2744 A8	3723 E12	7740 A10	
2745 A9	3724 G12	7750 C10	
2746 B14	3725 H12	7760 F10	
2747 B14	3726 J12	7770 I10	
2748 C14	3727 K12	7780 K8	
2749 C14	3728 K14	9700 G8	
2750 C12	3729 K14	9740 A14	
2751 F12	3730 I17	9741 E14	
2752 E8	3731 J16	9742 F14	
2753 F9	3732 J16	9748 E7	
2754 D8	3733 J17	9749 F6	
2755 D9	3734 J17	9750 E15	
2756 D14	3735 K17	9751 E15	
2757 E14	3740 B9	9752 E15	
2758 F14	3741 C9	9753 F15	
2759 F14	3742 A9	9790 J5	
2760 F12	3743 A9	9791 K5	
2761 I12	3744 A13	9792 D3	
2762 H8	3745 C13	9793 G5	
2763 I9	3750 E8	9794 H6	
2764 G8	3751 F9	9795 H5	
2765 G9	3752 D8	9796 B7	
2766 G14	3753 D9		
2767 H14	3754 D13		

Large Signal Panel [A4]
(for readability)

Item	Corded	Cordless
0328	4822 267 10981	4822 267 10962
0339	4822 267 10971	-
2702	4.7nF	-
2705	150pF	100nF
2712	4.7nF	-
2742	47nF	220nF
2743	680pF	1.5nF
2744	47nF	-
2752	1 F	-
2753	1.5nF	330nF
2754	150nF	220nF
2755	1.5nF	680pF
2761	220nF	220nF
2762	1 F	1 F
2763	1.5nF	1.5nF
2764	1 F	-
2765	1.5nF	1.5nF
2766	47nF	47nF
2767	47nF	47nF
2768	47nF	47nF
2769	47nF	47nF
2770	-	47nF
2771	-	220nF
2774	-	220nF
2775	-	1.5nF
2776	-	47nF
2777	-	47nF
2778	-	47nF
2779	-	47nF
3700	1k	-
3701	330E	-
3707	15k	-
3707	-	8k2
3710	1k	-
3711	330E	-
3715	15k	10k
3716	1k	-
3717	1k8	100R
3720	100k	-
3723	100k	-
3724	47k	100k
3725	47k	-
3726	-	100k
3741	33k	820R
3742	470R	-
3743	33k	-
3750	3k9	-
3751	56k	-
3752	470R	3k3
3753	6k8	1k8
3760	-	22k
3760	470R	-
3761	6k8	3k9
3762	470R	-
3763	6k8	-
3764	8R2	8R2
3765	8R2	8R2
3772	-	470R
3773	-	820R
3774	-	8R2
3775	-	8R2
3782	5k6	5k6
3783	-	5k6
7760	TDA2616Q/N1	TDA2616Q/N1
7770	-	TDA2616Q/N1
9700	-	Jumper
9707	-	Jumper
9710	Jumper	-
9716	Jumper	Jumper
9720	Jumper	Jumper
9724	Jumper	Jumper
9740	Jumper	-

Layout Large Signal Panel (Top View)

0040	E9	0055	C2	0320	E2	0335	G3	0392	B9	2341	A7	2414	B7	2423	A4	2435	B6	2444	G8	2461	F7	2482	G7	2495	C7	2615	G9	2701	F2	2716	G2	2738	G1	2746	F3
0041	F7	0303	A1	0321	A6	0336	G2	0393	E6	2400	D6	2415	B8	2424	B2	2436	D3	2445	G8	2462	E8	2484	D4	2506	A2	2616	G8	2702	G1	2720	G3	2739	G1	2747	F3
0042	G5	0304	A2	0324	E7	0337	G5	0394	C3	2401	C7	2417	B9	2425	C6	2437	C4	2448	D9	2463	F8	2485	D4	2509	B2	2617	G9	2704	G2	2721	G5	2740	G4	2748	F3
0043	F4	0305	A1	0325	E6	0338	G4	0395	F9	2409	A7	2418	C9	2426	D6	2438	D4	2450	E9	2465	F9	2486	D3	2520	C9	2618	F9	2705	F2	2722	F5	2741	G4	2749	F3
0044	E4	0310	E9	0326	E7	0339	F4	1460	F8	2410	C9	2419	C8	2431	C4	2439	C4	2454	D9	2466	F9	2487	D4	2530	F7	2619	F9	2711	G1	2723	E3	2742	G3	2750	G6
0046	B6	0311	G7	0327	E2	0360	E1	2200	D1	2411	A8	2420	C7	2432	B3	2440	E6	2455	G7	2469	A8	2488	C6	2609	F9	2620	F8	2712	G1	2730	E2	2743	G4	2751	G6
0047	C7	0315	G6	0328	G1	0390	G9	2217	C3	2412	B7	2421	A4	2433	B4	2442	F5	2457	C9	2480	C3	2493	A3	2612	F9	2625	E6	2714	G1	2732	E2	2744	G3	2752	F3
0049	B6	0317	B7	0329	D3	0391	F9	2340	A7	2413	A8	2422	A4	2434	B4	2443	G8	2460	F7	2481	G7	2494	B5	2613	F8	2640	D2	2715	F1	2733	E2	2745	G3	2753	G6

2754	F3	2762	F6	2770	E5	2779	E3	2794	E2	3493	D4	3790	F2	7421	C9	9640	C2																		
2755	G5	2763	F5	2771	E4	2780	F2	2795	F2	3494	D4	3791	F2	7437	C3	9641	C1																		
2756	G4	2764	F4	2772	F2	2781	F1	3200	B1	3495	D3	3998	C1	7440	G9	9642	C1																		
2757	G5	2765	F5	2774	F4	2782	F2	3201	B1	3496	D3	5200	B1	7441	G9	9643	D1																		
2758	G4	2766	F5	2775	E4	2790	E1	3204	C1	3497	E4	5304	E7	7442	G9	9700	F5																		
2759	F5	2767	E5	2776	E3	2791	F1	3215	C1	3498	E4	5400	A6	7460	A8	9702	E1																		
2760	F5	2768	F4	2777	E3	2792	E1	3217	C2	3506	A2	5401	B7	7480	G8	9708	F2																		
2761	F5	2769	F5	2778	F3	2793	F1	3218	C2	3507	B2	5410	B8	7484	D3	9712	E2																		
								3219	C2	3509	G8	5411	B8	7490	A6	9713	G6																		
								3248	C1	3510	A6	5421	D4	7600	G9	9714	G3																		
								3249	C1	3511	A6	5422	B4	7640	D1	9716	F5																		
								3340	A6	3512	A6	5423	C6	7641	C2	9719	G6																		
								3341	A7	3514	C9	5424	B4	7642	D2	9720	F5																		
								3342	B6	3520	C9	5425	D6	7700	F1	9721	E5																		
								3343	A7	3521	C9	5426	C7	7710	F1	9722	F2																		
								3344	A7	3530	G7	5427	C6	7720	F1	9725	F1																		
								3345	A7	3531	F7	5430	E8	7730	E2	9740	G3																		
								3346	A7	3532	F7	5460	E7	7731	E3	9741	G5																		
								3347	B7	3601	F8	5462	E8	7732	E3	9742	F4																		
								3348	A7	3602	F8	5466	E8	7733	E2	9748	F2																		
								3349	A7	3603	F8	5468	F8	7740	G4	9749	F2																		
								3350	A6	3604	F7	5480	C3	7750	G5	9750	G5																		
								3353	B7	3609	F9	5490	F8	7760	F5	9751	G5																		
								3354	B7	3610	F9	5491	F7	7770	E4	9752	G5																		
								3355	A7	3611	G8	5493	A3	7780	E2	9753	G4																		
								3401	C7	3612	G8	5501	A2	9302	B8	9790	E2																		
								3404	A8	3613	G8	5502	B1	9304	A6	9791	E2																		
								3406	A8	3614	F9	5617	G8	9305	B6	9792	G2																		
								3407	A8	3617	G8	5701	G1	9307	A7	9793	F3																		
								3408	A8	3618	E5	5702	G1	9340	A7	9794	F5																		
								3409	B6	3619	E6	6217	C2	9341	A7	9795	F5																		
								3410	B8	3620	F8	6248	C1	9342	D7	9796	F3																		
								3411	B7	3621	F8	6249	C1	9400	E6	9797	G9																		
								3412	B6	3625	E6	6340	A6	9401	B7	9798	G3																		
								3413	D4	3630	G9	6341	A7	9402	C6	9801	C6																		
								3414	A8	3640	D2	6407	A8	9403	C3	9802	B6																		
								3415	A8	3641	E2	6408	A8	9405	G7	9803	B6																		
								3416	A8	3642	C2	6409	A9	9406	E5	9804	F2																		
								3417	B9	3643	C2	6410	B7	9407	G8	9805	E2																		
								3418	B9	3646	D2	6411	B8	9408	B8	9807	C5																		
								3419	B7	3647	D2	6421	C6	9409	E5	9808	B2																		
								3423	C6	3648	D2	6422	C7	9410	A8	9814	C9																		
								3424	C6	3649	D3	6423	C6	9411	A8	9817	F2																		
								3425	D6	3650	D2	6424	D7	9412	E9	9819	B2																		
								3426	D6	3651	D3	6425	B3	9413	G6	9820	A2																		
								3428	C4	3703	G2	6426	B3	9414	D7	9823	C8																		
								3429	C3	3704	F2	6437	C3	9415	E5	9824	G1																		
								3430	C4	3705	G2	6441	F6	9416	B9	9825	G1																		
								3431	C4	3707	F2	6451	C9	9417	E5	9827	E1																		
								3432	C4	3712	F1	6452	C9	9418	E5	9829	F2																		
								3434	B3	3713	F2	6453	C9	9420	D5	9830	E2																		
								3435	B3	3715	F1	6454	C9	9421	E5	9831	G2																		
								3436	D3	3716	G1	6460	F7	9422	E7	9832	G2																		
								3437	C4	3717	F1	6462	F9	9423	E7	9833	G1																		
								3438	D4	3720	F4	6463	F8	9424	E6	9834	G3																		
								3439	C3	3721	G4	6464	F6	9425	E7	9835	F2																		
								3440	G8	3722	G4	6465	F6	9426	C7	9836	F3																		
								3441	G9	3723	G4	6469	G7	9427	C6	9837	F3																		
								3442	G9	3724	F3	6480	G7	9428	F8	9838	G4																		
								3443	E7	3725	F3	6483	C3	9430	E5	9839	F4																		
								3444	G8	3726	E4	6484	D3	9431	D4	9840	G5																		
								3445	G9	3727	E4	6485	D3	9432	F9	9841	F4																		
								3446	G9	3728	E3	6486	D4	9433	F6	9843	F3																		
								3447	G9	3729	E3	6487	D4	9441	E7	9844	E7																		
								3448	D9	3730	E2	6488	E5	9445	E7	9845	F7																		
								3449	E9	3731	E2	6489	F9	9450	E9	9846	C2																		
								3450	B9	3732	E3	6490	F8	9451	E7																				
								3451	B9	3733	E2	6491	F7	9452	F9																				
								3452	B9	3734	E2	6495	A6	9453	D9																				
								3453	B9	3735	E3	6496	B5	9454	E7																				
								3454	C9	3740	G4	6530	F7	9455	E6																				
								3455	B9	3741	G4	6608	G8	9460	F7																				
								3457	C9	3742	G3	6609	G7	9466	E7																				
								3458	C9	3743	G3	6610	G7	9468	F9																				
								3459	C9	3744	F3	6614	F9	9481	C3																				
								3460	A8	3745	F3	6617	G9	9483	B6																				
								3461	A8	3750	F6	6618	G9	9484	B5																				
								3462	E9	3751	G6	6620	F8	9487	G7																				
								3463	F9	3752	G6	6640	E2	9488	A7																				
								3464	F6	3753	G6	6641	D2	9489	B6																				
								3465	E7	3754	G4	6642	D2	9490	F8																				
								3466	F7	3755	G4	6643	D1	9491	F7																				
								3467	E7	3760	F5	6644	E1	9492	A4																				
								3468	E8	3761	F5	6645	E2	9493	B3																				
								3469	A8	3762	F4	6646	D2	9494	D9																				
								3478	G6	3763	F4	6790	F2	9495	D5																				
								3480	G7	3764	F5	6791	F2	9497	E5																				
								3481	F7	3765	F4	7200	C1	9498	G7																				
								3482	G7	3772	E4	7215	C1	9499	E5																				
								3483	G8	3773	E4	7216	C1	9501	A2																				
								3484	G8	3774	E3	7217	C2	9502	B2																				
								3485	G7	3775	E3	7340	B7	9503	B1																				
								3486	G7	3780	F3	7341	A7	9504	A6																				
								3487	B3	3781	G5	7342	A7	9520	C9																				
								3488	F7	3782	F3	7344	B7	9525	G7																				
								3489	C3	3783	E3	7408	A7	9609	F9																				
								3490	D3	3785	F2	7409	A8	9614	F9																				
								3491	D3	3786	F2	7410	B7	9621	F6																				
								3492	D3	3787	G1	7411	A7	9622	G9																				

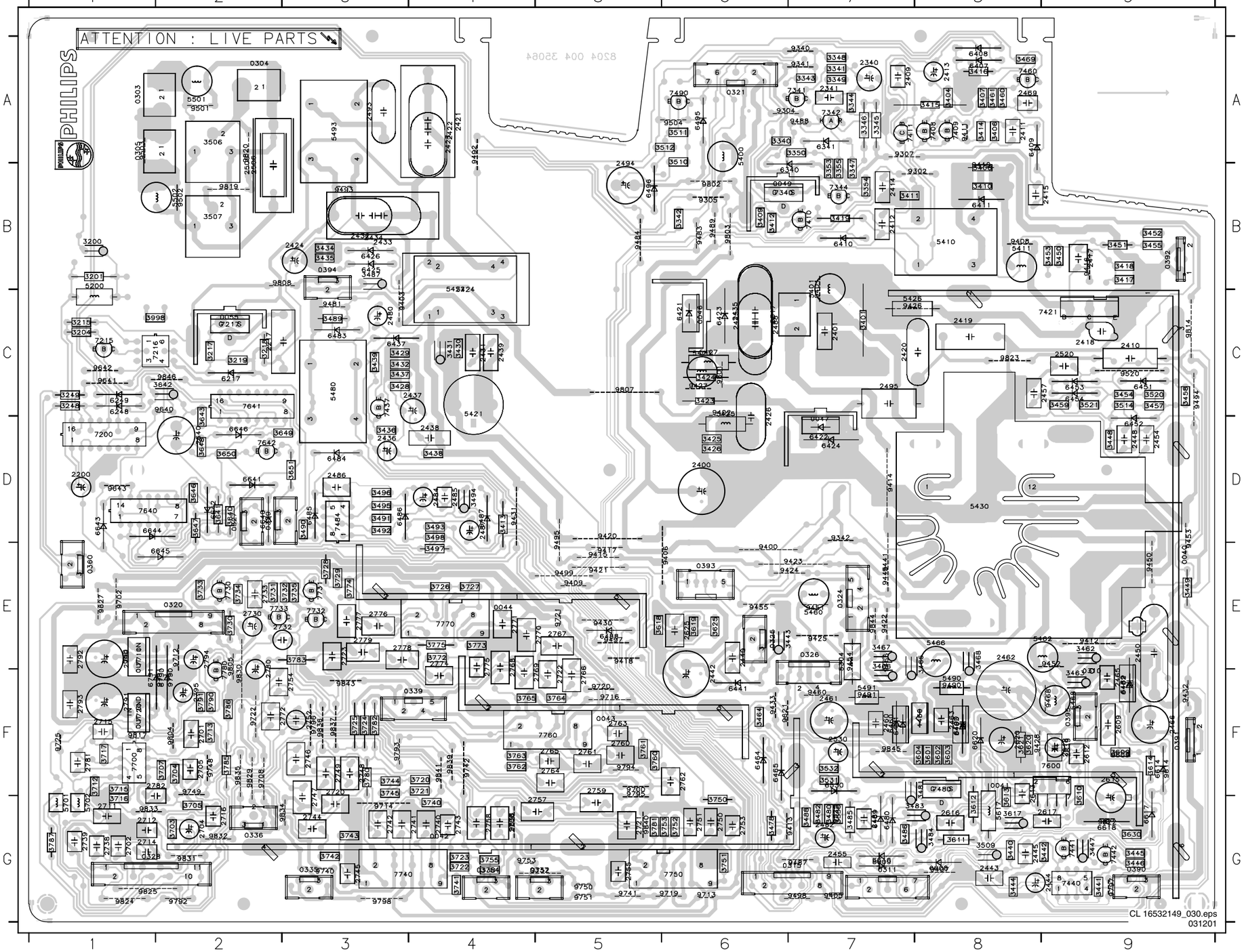

Layout Large Signal Panel (Bottom View)

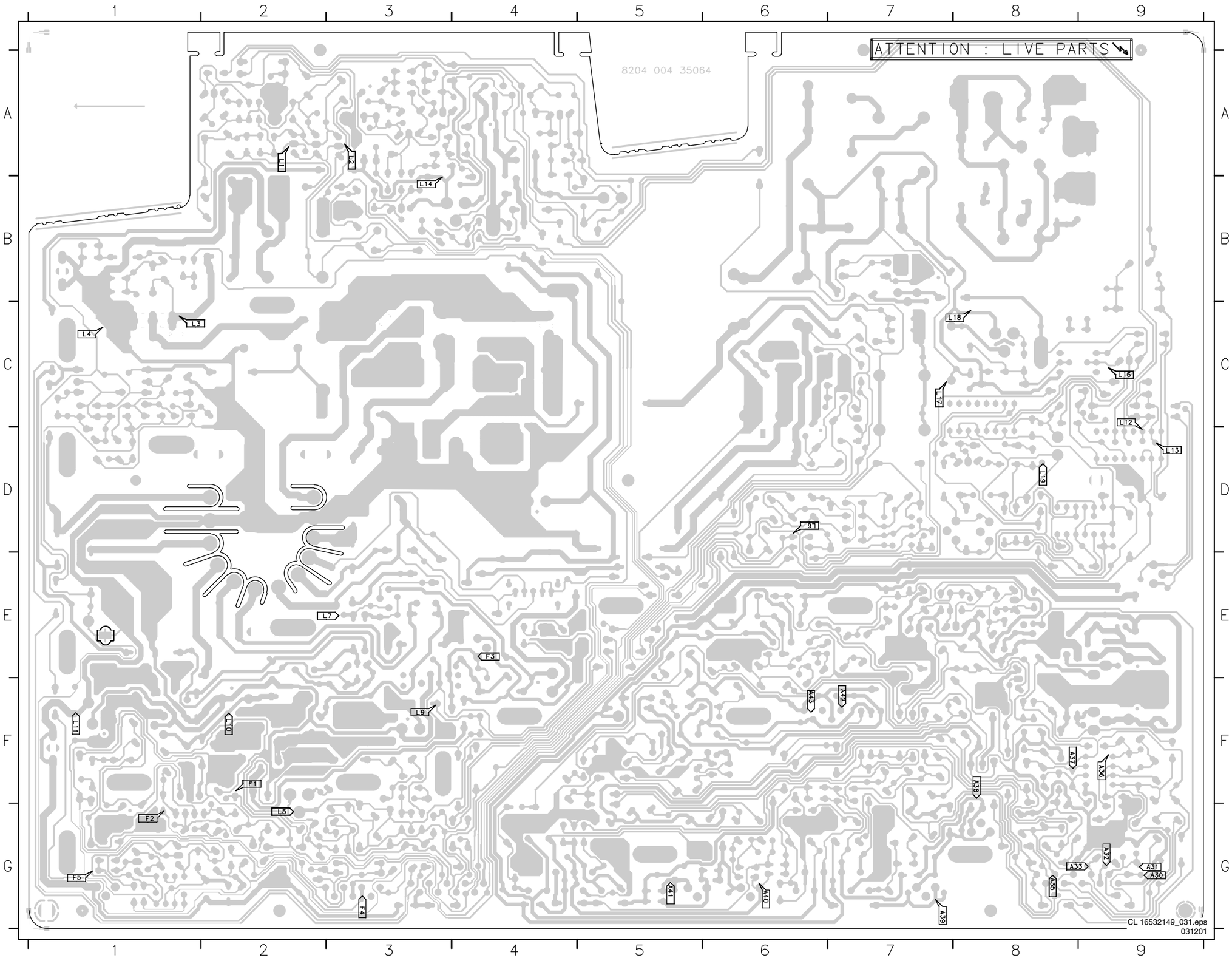

Top Supply

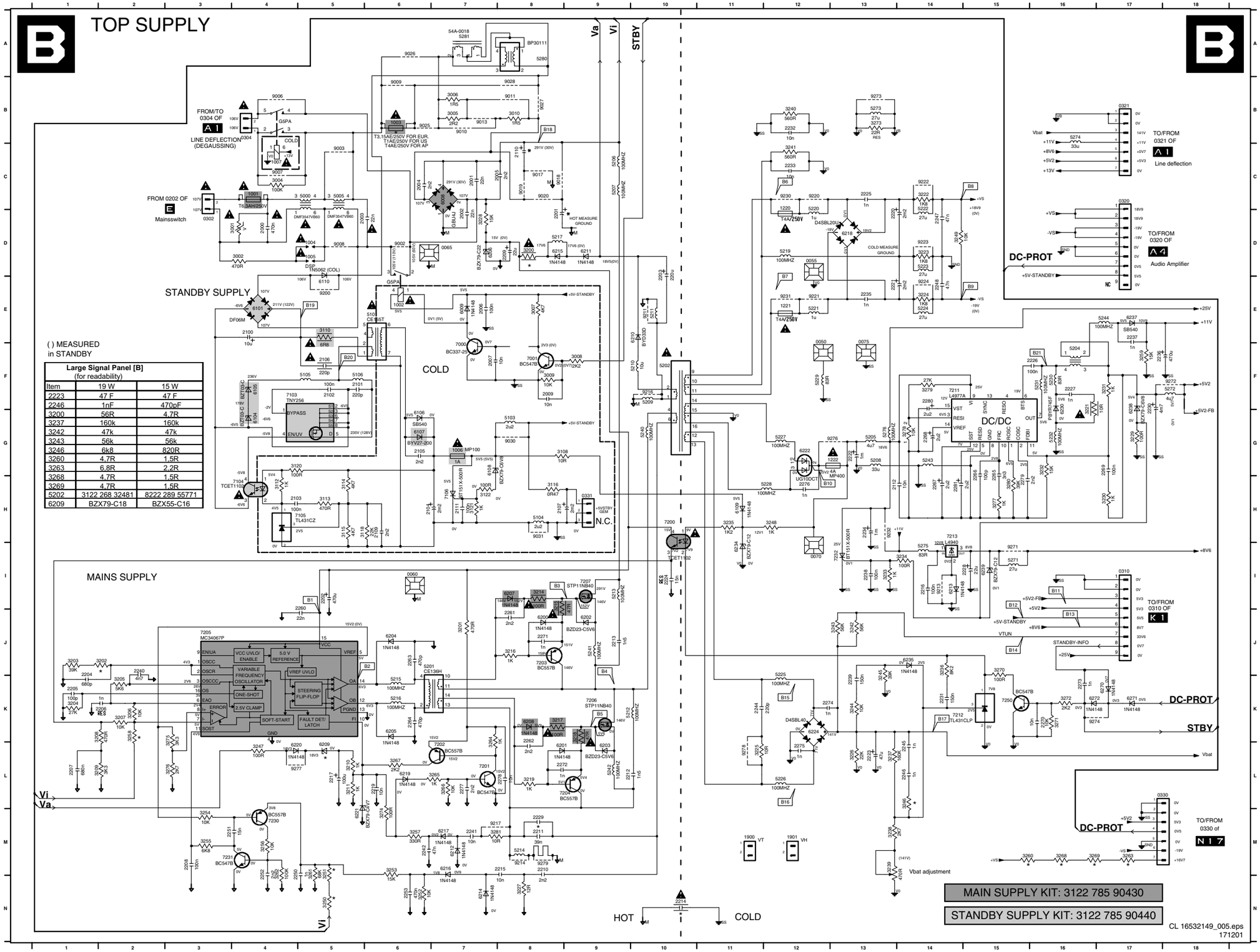

Large Signal Panel [B] (for readability)		
Item	19 W	15 W
2223	47 F	47 F
2246	1nF	470pF
3200	56R	4.7R
3237	160k	160k
3242	47k	47k
3243	56k	56k
3246	6k8	820R
3260	4.7R	1.5R
3263	6.8R	2.2R
3268	4.7R	1.5R
3269	4.7R	1.5R
5202	3122 268 32481	8222 289 55771
6209	BZX79-C18	BZX55-C16

0050 F12	3114 H5	5274 B16
0055 D12	3115 H5	5275 I14
0060 I6	3116 H8	5276 G13
0065 D7	3118 H5	5280 A8
0070 I12	3120 G4	5281 A7
0075 F13	3121 H7	6008 C7
0302 D3	3122 H7	6009 E7
0304 B4	3200 D8	6101 E4
0310 I17	3201 J7	6104 G4
0320 C17	3202 J2	6105 F4
0321 B17	3203 J1	6106 G6
0330 L17	3204 K1	6107 G6
0331 H9	3205 K2	6108 G7
1001 C4	3206 K2	6109 H11
1002 E6	3207 K2	6110 E5
1003 B6	3208 K1	6200 J8
1004 D5	3209 L1	6201 L8
1005 D5	3210 L5	6202 J9
1006 G7	3211 L5	6203 L9
1007 C4	3214 I8	6204 J6
1220 C12	3215 I8	6205 K6
1221 E12	3216 J8	6206 D7
1222 G13	3217 K8	6207 I8
1900 M11	3218 K9	6208 K8
1901 M12	3219 L8	6209 L5
2000 D4	3221 F16	6210 E10
2001 C7	3222 C14	6211 D9
2002 D7	3223 D14	6212 M7
2003 D5	3224 E14	6213 I14
2004 C6	3225 L11	6214 N7
2005 C8	3226 L13	6215 D8
2006 E7	3227 N8	6216 M7
2007 F7	3228 D7	6217 M7
2009 F8	3229 G17	6218 D13
2100 E4	3230 H17	6219 L6
2101 F5	3231 F17	6220 L4
2102 F5	3232 G16	6221 M5
2103 H4	3233 I13	6222 G12
2104 H6	3234 I14	6224 K12
2105 G6	3235 H11	6230 F16
2106 F5	3236 J14	6234 I11
2107 H8	3237 L13	6235 J14
2109 H6	3238 M13	6237 E17
2110 C8	3239 M13	6238 F17
2111 H7	3240 B12	6239 I15
2112 H13	3241 C12	6270 K17
2201 D8	3242 J13	6271 K17
2202 I5	3243 J13	6272 K16
2203 D10	3244 K13	7000 F7
2204 K1	3245 J13	7001 F8
2205 K1	3246 L14	7103 F4
2206 K2	3247 L4	7104 H4
2207 L1	3248 H12	7105 H4
2208 M3	3249 D14	7106 H7
2209 D8	3250 N5	7200 H10
2210 M8	3251 M5	7201 L7
2211 M8	3252 N6	7202 L7
2212 L9	3253 M6	7203 J8
2213 J9	3254 M3	7204 L8
2214 N10	3255 M3	7205 J3
2215 M8	3256 M4	7206 K9
2216 I14	3257 M6	7207 I9
2217 L5	3258 K2	7211 F14
2219 L6	3259 F17	7212 K15
2220 D13	3260 M15	7213 H14
2221 E13	3261 M5	7230 M4
2222 G13	3262 M4	7231 M4
2223 L13	3263 M17	7232 I13
2224 I10	3264 K7	7250 K15
2225 C13	3265 L7	9002 D6
2226 F16	3266 L7	9003 C5
2227 F16	3267 L6	9006 B4
2228 I15	3268 M16	9007 C4
2229 M8	3269 M16	9008 D5
2230 F17	3270 J15	9009 B6
2231 K14	3271 K16	9010 B7
2232 B12	3272 K16	9011 B8
2233 C12	3273 B13	9013 B7
2234 H13	3274 M6	9017 C8
2235 E13	3275 K3	9018 C8
2236 F17	3276 L3	9019 C8
2237 E17	3277 H15	9020 C8
2238 I13	3278 G14	9025 B6
2239 K13	3279 F14	9026 A6
2240 J2	3280 H15	9027 B8
2241 M7	3281 M7	9028 B8
2242 M6	3998 M15	9030 G8
2244 K11	5000 C5	9031 H8
2245 L14	5005 C5	9200 E5
2246 L14	5101 E6	9211 E10
2247 D14	5103 G8	9213 I14
2248 E14	5104 H8	9214 M8
2250 M4	5105 F5	9216 F10
2251 M3	5106 F5	9217 M7
2252 M4	5201 J6	9220 C12
2253 N6	5202 F10	9221 E12
2260 J5	5204 F16	9222 C14
2261 J8	5205 G13	9223 D14
2262 L8	5206 C9	9224 E14
2263 J6	5207 C9	9230 C12
2264 K6	5208 G13	9231 E12
2265 G15	5209 F10	9232 H13
2266 G15	5210 F10	9271 I15
2267 H14	5211 E10	9272 F18
2268 G14	5212 K9	9273 B13
2269 G17	5213 I9	9274 K16
2270 K16	5214 M8	9276 G13
2271 J8	5215 K6	9277 L4
2272 L8	5216 K6	9278 L11
2273 K16	5217 D8	9279 M8
2274 K12	5219 D12	
2275 L12	5220 D12	
2276 H12	5221 E12	
2277 L7	5222 D14	
2278 L8	5223 D14	
2279 H15	5224 E14	
2280 F14	5225 K12	
2281 H14	5226 L12	
3001 D4	5227 G12	
3002 D4	5228 H12	
3003 F8	5229 F12	
3004 C4	5230 F16	
3005 B7	5231 F16	
3006 B7	5232 G16	
3007 E8	5240 G10	
3008 F9	5241 J9	
3009 F8	5242 L9	
3010 B8	5243 G14	
3108 G8	5244 E17	
3110 E5	5271 I15	
3112 H4	5272 F18	
3113 H5	5273 B13	

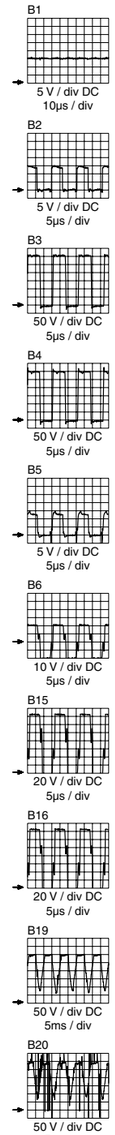

Layout Top Supply (Top View)

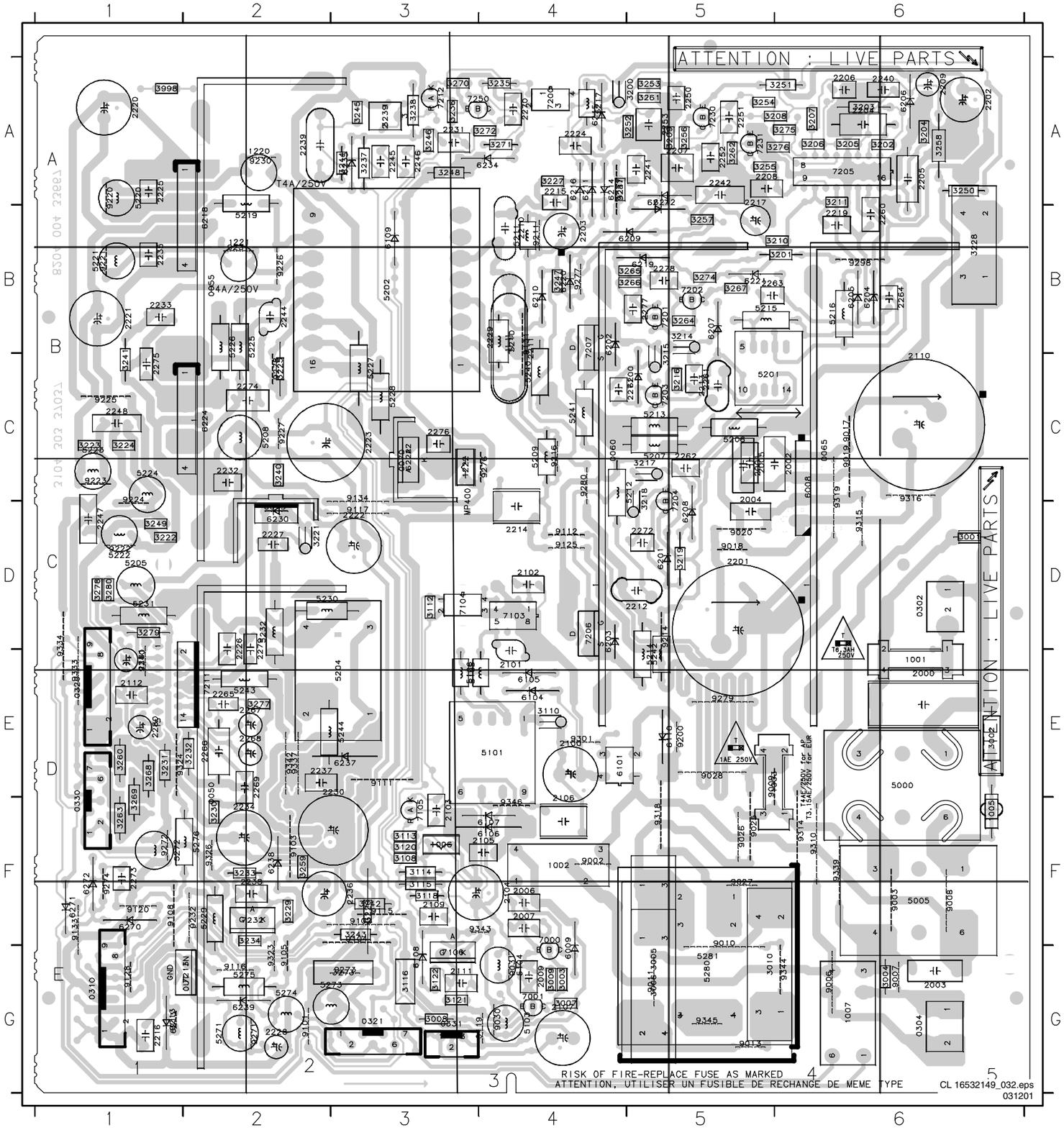

0050	E2	2267	E2	3267	B5	6230	D2	9319	C6
0055	B2	2268	E2	3268	E1	6234	A4	9323	G2
0060	C4	2269	E2	3269	F1	6235	A3	9324	F1
0065	C6	2270	A4	3270	A3	6237	E3	9326	F2
0070	C3	2271	C4	3271	A4	6238	F2	9333	E1
0075	D2	2272	D5	3272	A4	6239	G2	9334	D1
0302	D6	2273	F1	3273	G3	6270	F1	9337	E2
0304	G6	2274	C2	3274	B5	6271	F1	9339	F6
0310	G1	2275	C1	3275	A5	6272	F1	9340	E1
0320	E1	2276	C3	3276	A6	7000	F4	9342	E2
0321	G3	2277	B4	3277	E2	7001	G4	9343	F4
0330	F1	2278	B5	3278	D1	7103	E4	9344	G6
0331	G4	2279	D2	3279	D1	7104	D3	9345	G5
1001	D6	2280	E1	3280	D1	7105	E3	9346	F4
1002	F4	2281	D1	3281	A5	7106	G3		
1003	E6	3001	D6	3998	A1	7200	A4		
1005	F6	3002	E6	5000	E6	7201	B5		
1006	F3	3003	G4	5005	F6	7202	B5		
1007	G6	3004	G6	5101	E3	7203	C5		
1220	A2	3005	G4	5103	G4	7204	C5		
1221	B2	3006	G4	5104	G4	7205	A6		
1222	C3	3007	G4	5105	E4	7206	D4		
2000	E6	3008	G3	5106	E3	7207	C4		
2001	C5	3009	G4	5201	C6	7211	D2		
2002	C5	3010	G6	5202	B2	7212	A3		
2003	G6	3108	F3	5204	E3	7213	G2		
2004	C5	3110	E4	5205	D1	7230	A5		
2005	C5	3112	D3	5206	C5	7231	A5		
2006	F4	3113	F3	5207	C5	7232	F2		
2007	F4	3114	F3	5208	C2	7250	A4		
2009	G4	3115	F3	5209	C4	9002	F4		
2100	E4	3116	G3	5210	C4	9003	F6		
2101	E4	3118	F3	5211	B4	9006	G6		
2102	D4	3120	F3	5212	D4	9007	G6		
2103	F3	3121	G3	5213	C5	9008	F6		
2104	F3	3122	G3	5214	E5	9009	E5		
2105	F4	3200	A4	5215	B5	9010	G5		
2106	F4	3201	B6	5216	B6	9011	G5		
2107	G4	3202	A6	5217	A4	9013	G6		
2109	F3	3203	A6	5219	B2	9017	C6		
2110	C6	3204	A6	5220	A1	9018	D5		
2111	G3	3205	A6	5221	B1	9019	C6		
2112	E1	3206	A6	5222	D1	9020	D5		
2201	D5	3207	A6	5223	C1	9025	F5		
2202	A6	3208	A6	5224	C1	9026	F5		
2203	B4	3209	A5	5225	B2	9027	F5		
2204	A6	3210	B6	5226	B2	9028	E5		
2205	A6	3211	B6	5227	C3	9030	G4		
2206	A6	3214	C5	5228	C3	9031	G4		
2207	A5	3215	C5	5229	F2	9101	G2		
2208	A5	3216	C5	5230	D2	9102	F3		
2209	A6	3217	C5	5231	D1	9103	F2		
2210	B4	3218	C5	5232	D2	9104	G3		
2211	C4	3219	D5	5240	C4	9105	G2		
2212	D5	3221	D2	5241	C4	9108	F1		
2213	C5	3222	D1	5242	E5	9111	E3		
2214	D4	3223	C1	5243	E2	9112	D4		
2215	A4	3224	C1	5244	E2	9115	F3		
2216	G1	3225	C2	5271	G2	9116	G2		
2217	A5	3226	F3	5272	F1	9117	D3		
2219	B6	3227	A4	5273	G3	9119	G3		
2220	A1	3228	B6	5274	G2	9120	F1		
2221	B1	3229	F2	5275	G2	9125	D4		
2222	D3	3230	E2	5276	F2	9128	G1		
2223	C3	3231	E1	5280	G4	9131	B4		
2224	A4	3232	E2	5281	G5	9133	F1		
2225	A1	3233	F2	6008	C6	9134	C3		
2226	D2	3234	G2	6009	G4	9200	E5		
2227	D2	3235	A4	6101	E4	9211	B4		
2228	G2	3236	A3	6104	E4	9213	G1		
2229	B4	3237	A3	6105	E4	9214	D5		
2230	E3	3238	A3	6106	F4	9216	C4		
2231	A3	3239	A3	6107	F4	9217	A4		
2232	C2	3240	C2	6108	G3	9220	A1		
2233	B1	3241	C1	6109	B3	9221	B1		
2234	F2	3242	F3	6110	E5	9222	D1		
2235	B1	3243	F2	6200	C5	9223	C1		
2236	F3	3244	A3	6201	D5	9224	D1		
2237	E2	3245	A3	6202	B4	9225	C1		
2238	F2	3246	A3	6203	D4	9226	B2		
2239	A3	3247	B4	6204	B6	9227	C2		
2240	A6	3248	A3	6205	B6	9230	A2		
2241	A5	3249	D1	6206	A6	9231	B2		
2242	B5	3250	A6	6207	B5	9232	F1		
2244	B2	3251	A6	6208	D5	9271	G2		
2245	A3	3252	A4	6209	B5	9272	F1		
2246	A3	3253	A5	6210	B4	9273	G3		
2247	D1	3254	A5	6211	B4	9274	F1		
2248	C1	3255	A5	6212	A5	9276	C4		
2250	A5	3256	A5	6213	G1	9277	B4		
2251	A5	3257	B5	6214	A4	9278	C2		
2252	A5	3258	A6	6215	A4	9279	E5		
2253	A5	3259	F2	6216	B4	9280	C4		
2260	B6	3260	E1	6217	B5	9298	B6		
2261	C5	3261	A5	6218	B1	9301	E4		
2262	C5	3262	A5	6219	B5	9310	F6		
2263	B5	3263	F1	6220	B4	9314	F6		
2264	B6	3264	B5	6221	B5	9315	D6		
2265	E2	3265	B5	6222	C3	9316	D6		
2266	E2	3266	B4	6224	C1	9318	F5		

Layout Top Supply (Top View)

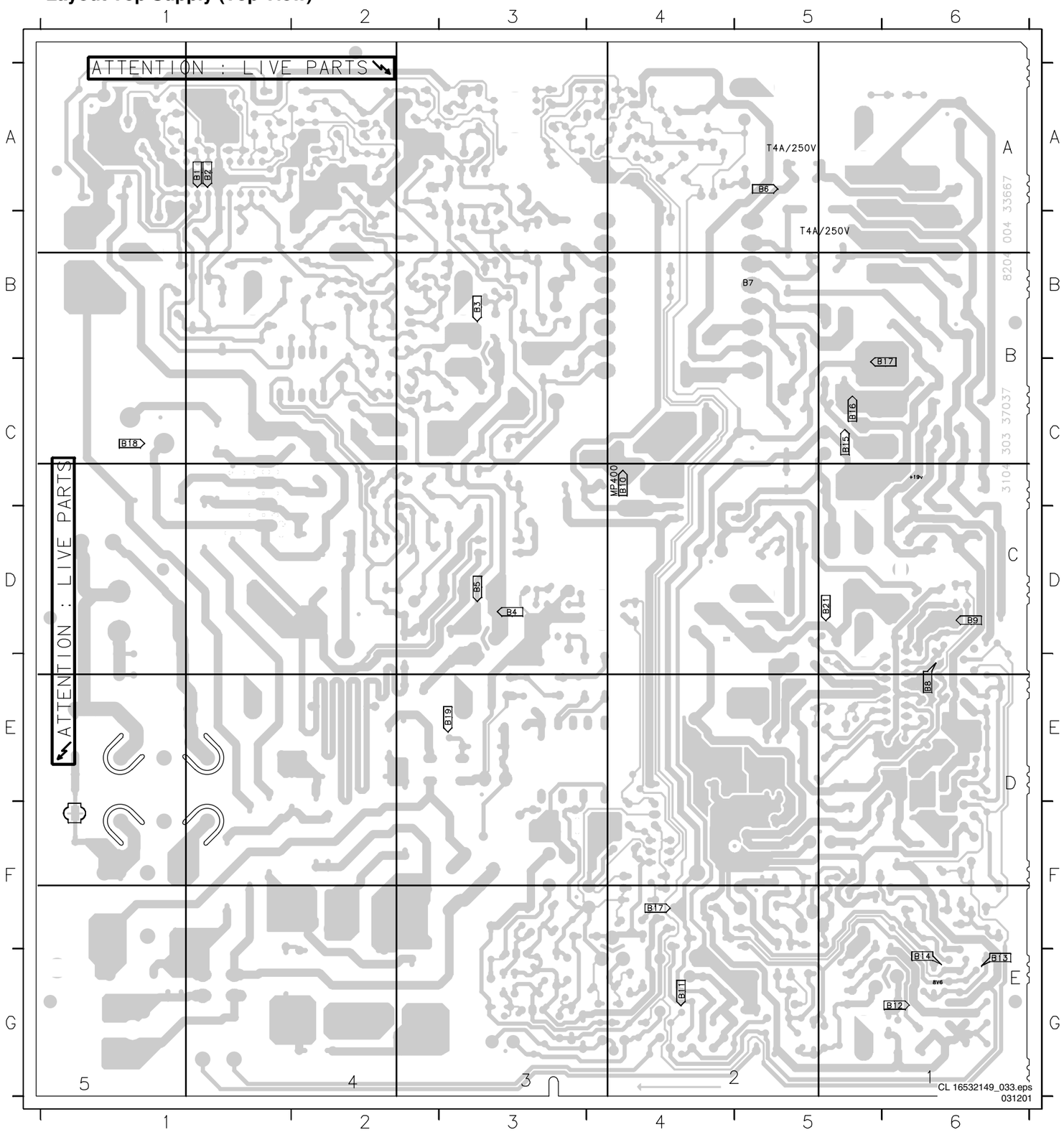

Mains Switch Panel

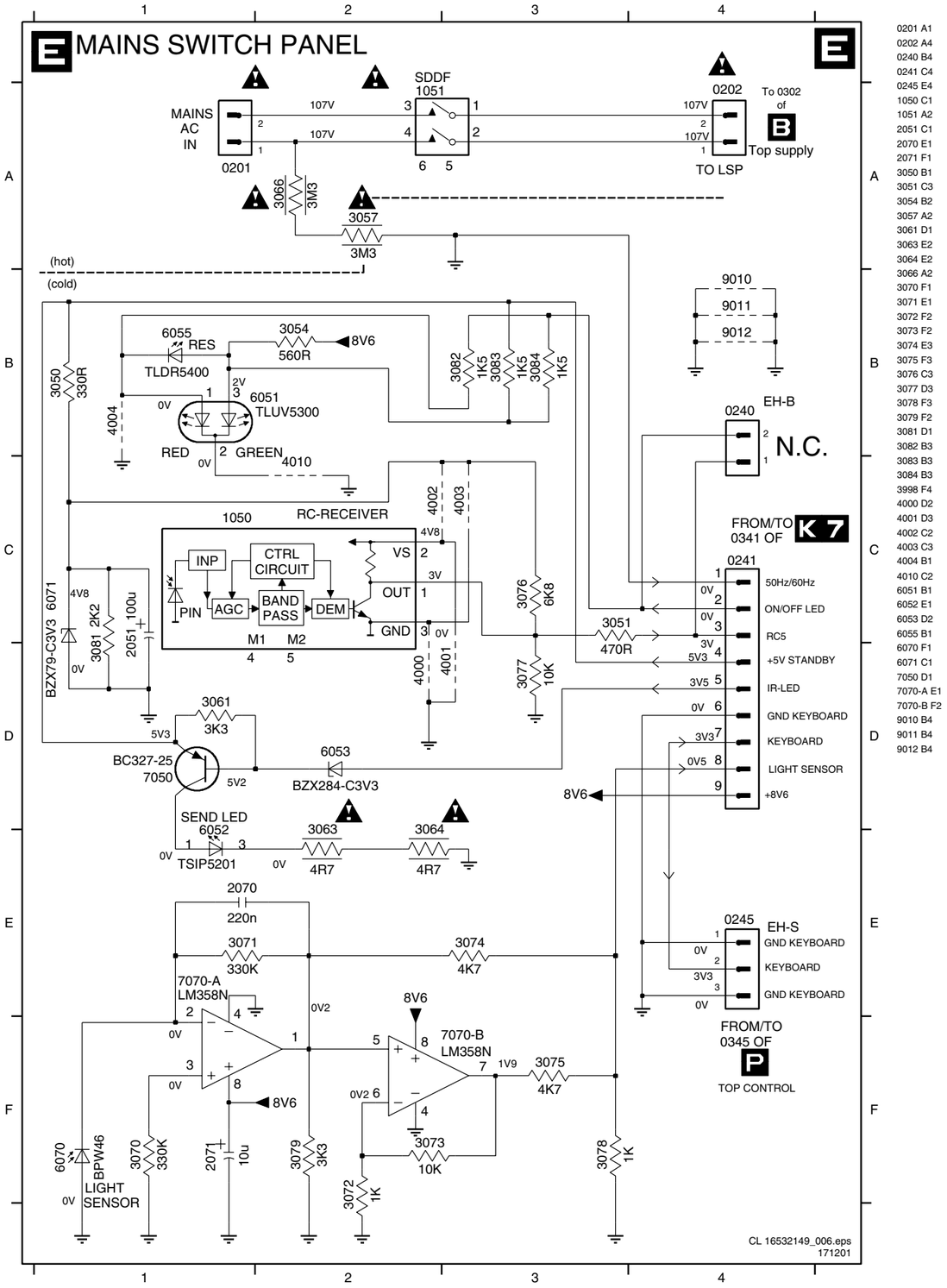

0201 A1
0202 A4
0240 B4
0241 C4
0245 E4
1050 C1
1051 A2
2051 C1
2070 E1
2071 F1
3050 B1
3051 C3
3054 B2
3057 A2
3061 D1
3063 E2
3064 E2
3066 A2
3070 F1
3071 E1
3072 F2
3073 F2
3074 E3
3075 F3
3076 C3
3077 D3
3078 F3
3079 F2
3081 D1
3082 B3
3083 B3
3084 B3
3998 F4
4000 D2
4001 D3
4002 C2
4003 C3
4004 B1
4010 C2
6051 B1
6052 E1
6053 D2
6055 B1
6070 F1
6071 C1
7050 D1
7070-A E1
7070-B F2
9010 B4
9011 B4
9012 B4

Personal Notes:

Layout Mains Switch Panel

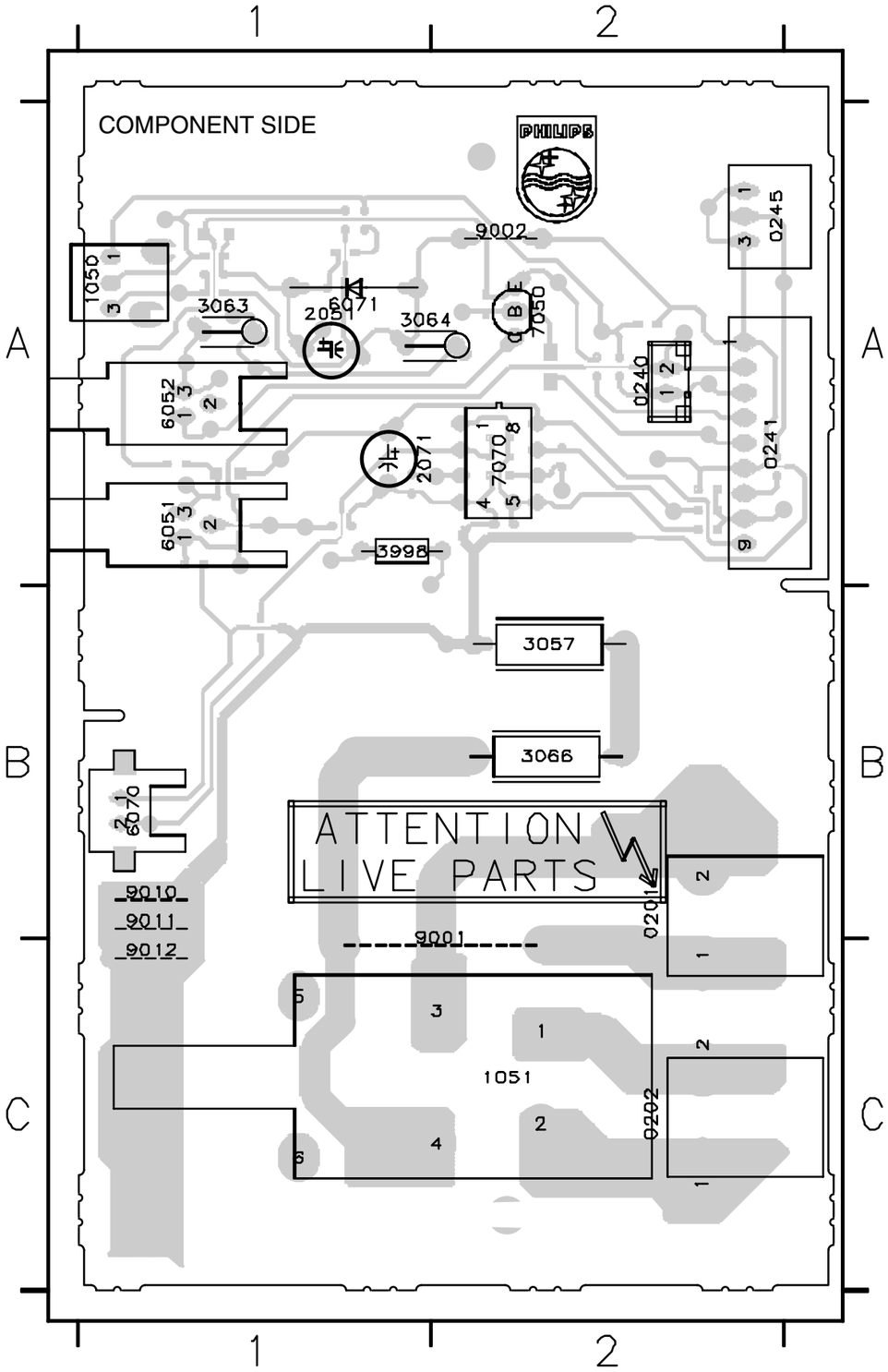

0201 B2
0202 C2
0240 A2
0241 A2
0245 A2
1050 A1
1051 C2
2051 A1
2071 A1
3057 B2
3063 A1
3064 A2
3066 B2
3998 A1
6051 A1
6052 A1
6070 B1
6071 A1
7050 A2
7070 A2
9001 B2
9002 A2
9010 B1
9011 B1
9012 C1

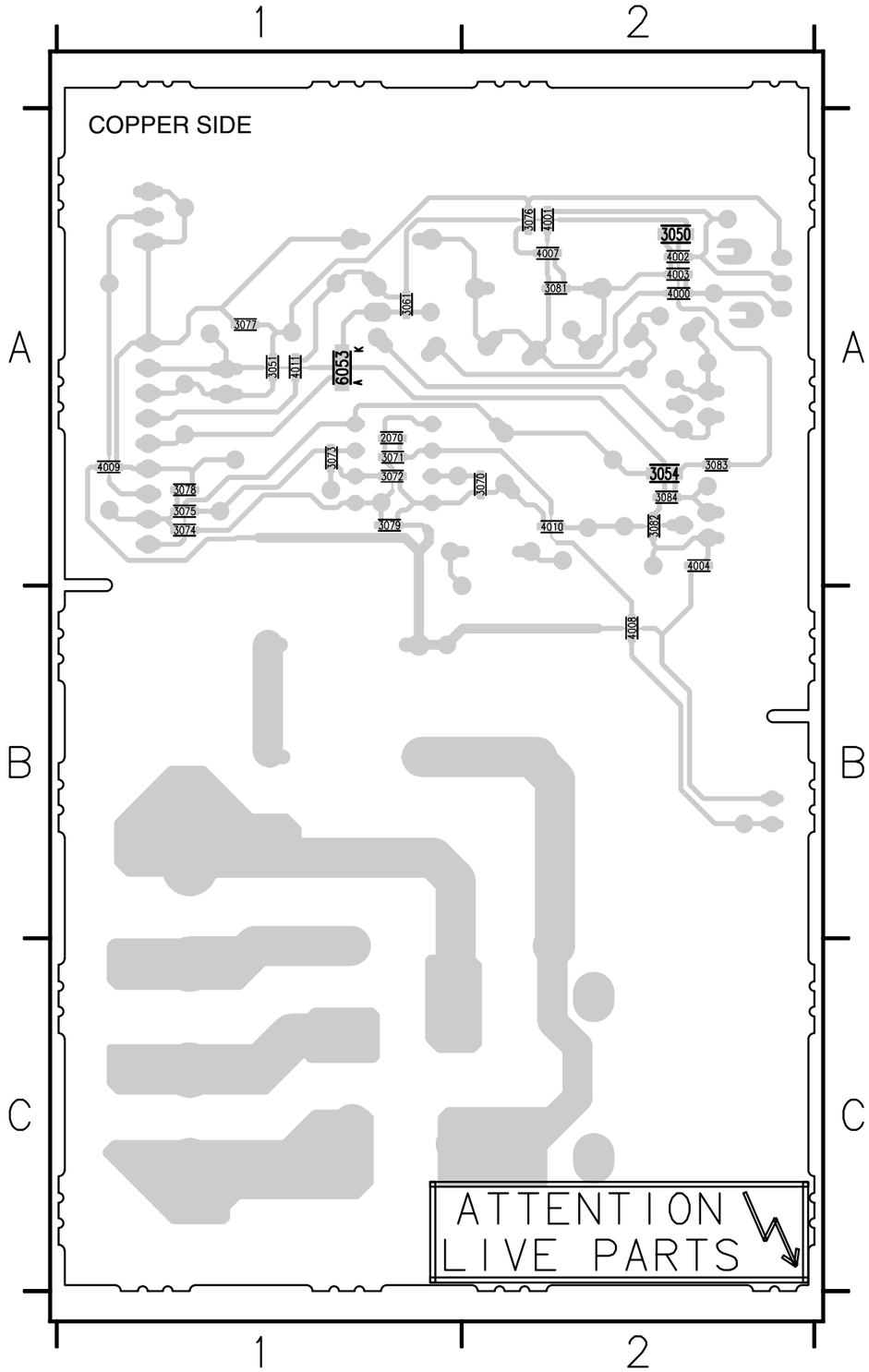

2070 A1
3050 A2
3051 A1
3054 A2
3061 A1
3070 A2
3071 A1
3072 A1
3073 A1
3074 A1
3075 A1
3076 A2
3077 A1
3078 A1
3079 A1
3081 A2
3082 A2
3083 A2
3084 A2
4000 A2
4001 A2
4002 A2
4003 A2
4004 A2
4007 A2
4008 B2
4009 A1
4010 A2
4011 A1
6053 A1

CL 16532149_034.eps
191201

CRT / Auto SCAVEM Panel

0031 C7	0297-D E11	0334 D1	2332 B5	2347 F7	2370 G2	2384 G11	2421 C11	2428 B15	2489 B11	3332 C4	3341 H6	3350 F7	3359 D5	3372 E1	3392 H13	3410 A13	3423 B3	3434 E3	3445 G4	3453 C9	3468 B15	3477 C11	3489 B11	4346 G5	5356 E5	6320 B2	6336 E10	6373 H11	7330 A6	7416 B2	7423 C12	9381 C13
0032 F8	0297-E E11	0340 A1	2336 A6	2350 F6	2372 F1	2393 I13	2422 B12	2429 C9	3324 I2	3333 A7	3342 H4	3351 E6	3360 H8	3373 G1	3396 H13	3411 B13	3424 C3	3435 D4	3446 G4	3454 C15	3470 C14	3478 D14	3492 A15	4356 E5	5372 E1	6321 B2	6345 E10	6374 H10	7340 G6	7417 B4	7424 C10	9383 I12
0033 D8	0297-F G11	0383 C14	2337 A6	2351 F5	2373 G1	2397 I13	2423 B15	2430 C13	3325 H2	3334 E9	3343 F7	3352 E4	3361 I8	3374 G1	3397 H13	3413 D13	3425 B4	3436 D4	3447 G4	3455 D9	3472 A14	3483 D11	3493 B15	4401 B3	5373 G1	6322 B2	6346 E10	6412 A14	7350 D6	7418 F3	7425 C10	9384 I12
0235 D11	0297-G G11	1382 A8	2340 H6	2352 E5	2374 F1	2398 I14	2424 C11	2440 F2	3327 H2	3335 E10	3344 F9	3353 D7	3362 I7	3382 I10	3401 A9	3414 A12	3426 B4	3437 E4	3448 A15	3456 D9	3473 A13	3484 D11	3494 B13	4402 G3	5400 E2	6323 B2	6355 E9	6413 B14	7412 A15	7419 G4	7426 C12	9385 H11
0297-A G13	0297-H G11	2325 H1	2341 H5	2356 D6	2381 G10	2410 C12	2425 A10	2475 B11	3329 H13	3336 C5	3345 F10	3354 F9	3363 D8	3383 H13	3402 A9	3416 B15	3427 C4	3441 G3	3450 B10	3460 B12	3474 C10	3485 A11	3495 C13	4403 D3	5401 B3	6324 H1	6356 E9	6414 B14	7413 B14	7420 D3	7427 A11	9390 I11
0297-B G13	0297-J G15	2330 C6	2342 G5	2357 D7	2382 H10	2411 A13	2426 B10	2484 D11	3330 C6	3339 B5	3346 G5	3355 F10	3364 G8	3385 H12	3403 A9	3421 B3	3431 D3	3443 G3	3451 B10	3462 B12	3475 C11	3487 A11	3999 I5	5336 C5	5402 G3	6325 I3	6371 H8	6415 C14	7414 B13	7421 E4	7428 B11	9392 I10
0297-C F11	0324 C1	2331 D5	2346 F6	2360 I7	2383 G10	2420 B12	2427 B15	2485 A11	3331 C6	3340 H7	3349 G5	3356 E5	3365 H8	3386 I10	3404 B9	3422 B14	3433 E3	3444 G3	3452 C9	3463 B15	3476 C11	3488 A11	4336 C5	5346 H5	5403 E3	6335 E10	6372 I7	7324 I2	7415 C13	7422 A10	7431 C10	

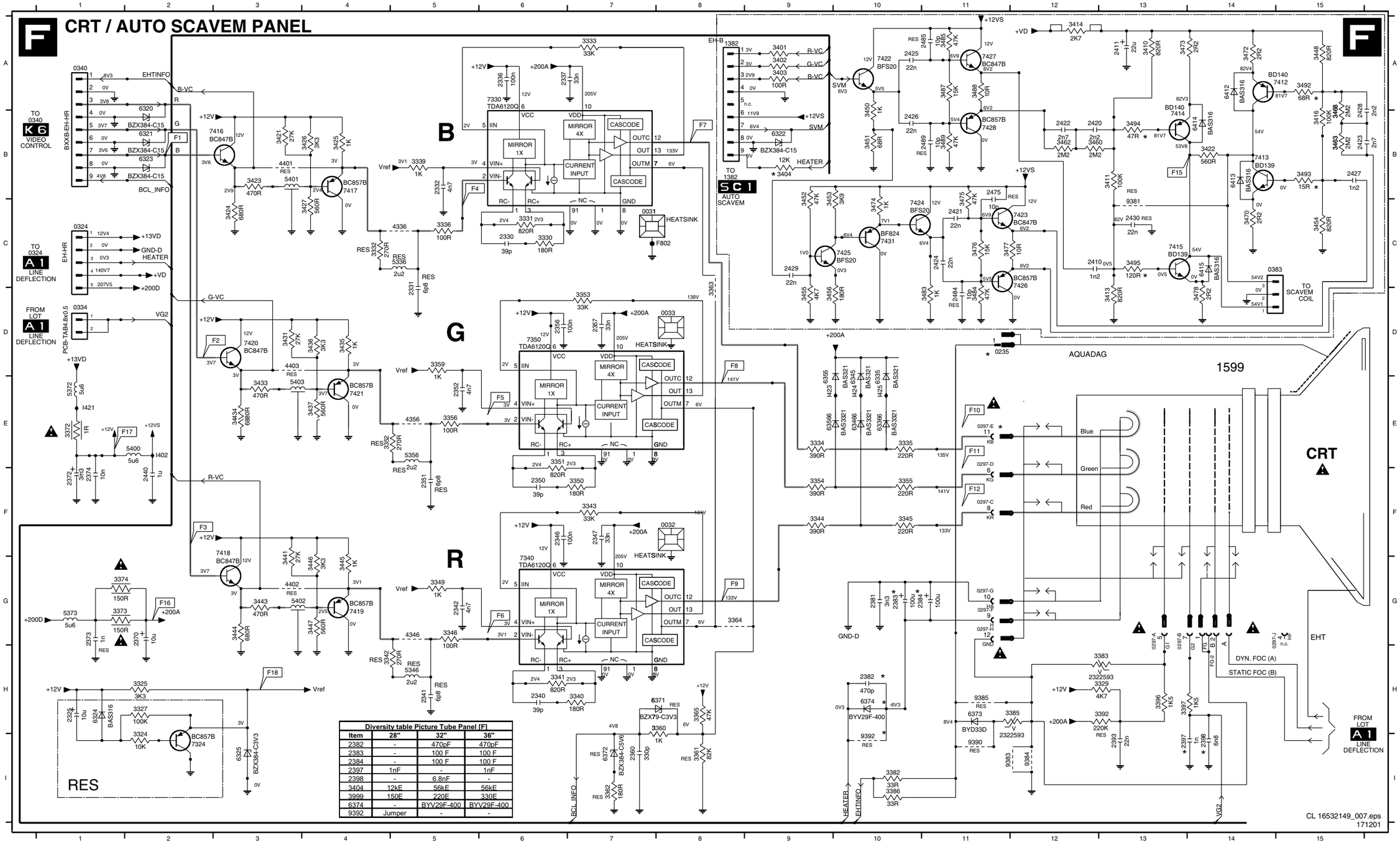

Diversity table Picture Tube Panel (F)			
Item	28"	32"	36"
2382	-	470pF	470pF
2383	-	100 F	100 F
2384	-	100 F	100 F
2397	1nF	-	1nF
2398	-	6.8nF	-
3404	12kE	56kE	56kE
3999	150E	220E	330E
6374	-	BYV29F-400	BYV29F-400
9392	Jumper	-	-

USE HEATSINK-GROUND AS MEASUREGROUND

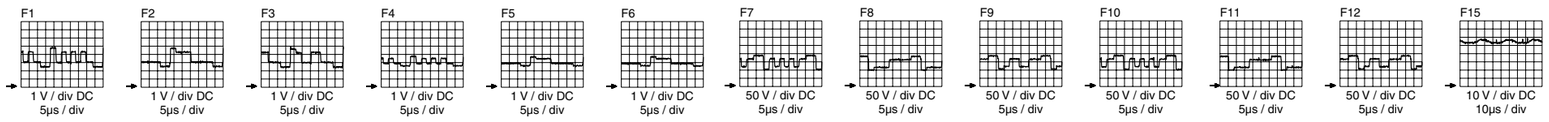

Layout CRT / Auto SCAVEM Panel (Top View)

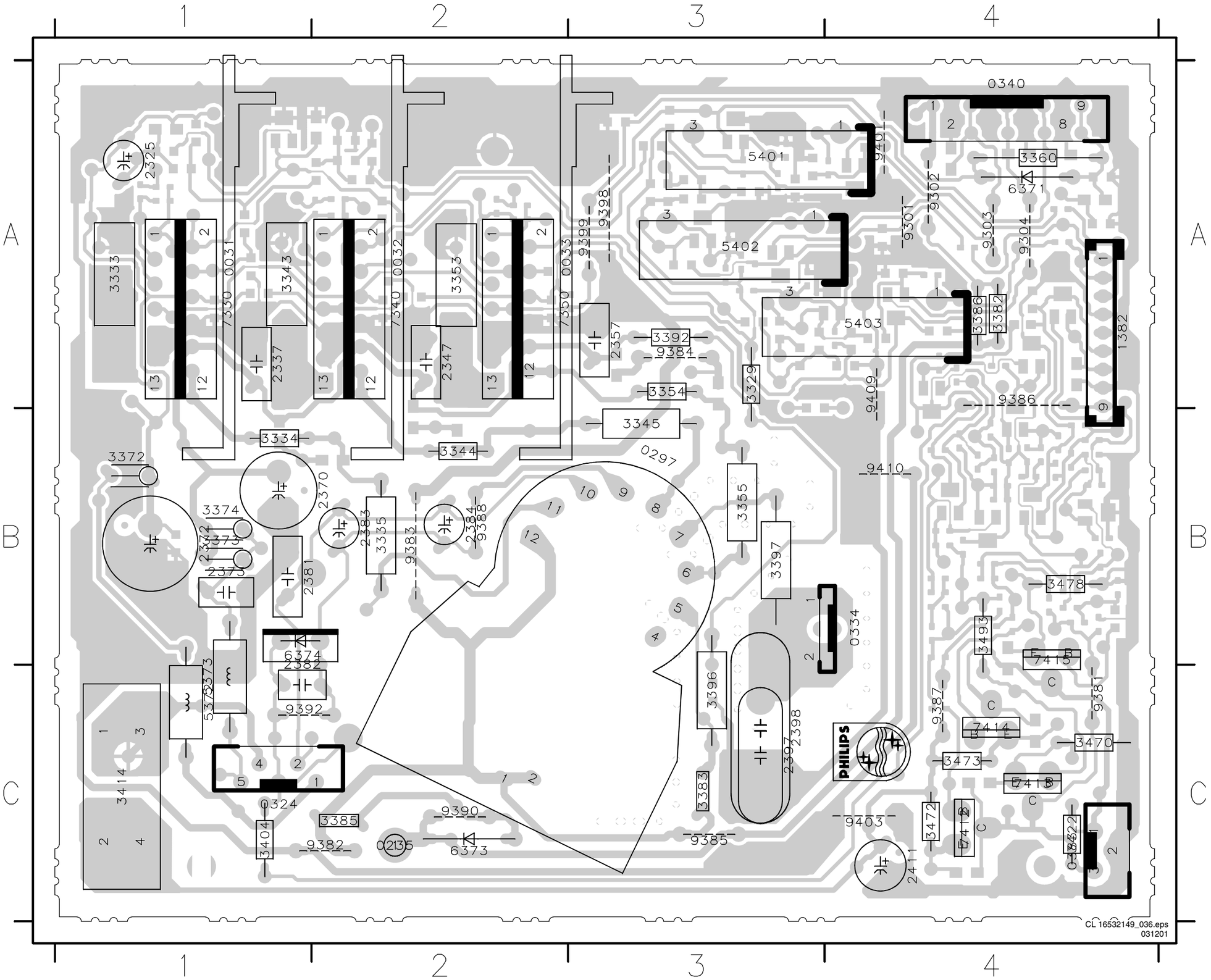

0031	A1	9302	A4
0032	A2	9303	A4
0033	A3	9304	A4
0235	C2	9381	C4
0297	B3	9382	C2
0324	C1	9383	B2
0334	B4	9384	A3
0340	A4	9385	C3
0383	C4	9386	A4
1382	A4	9387	C4
2325	A1	9388	B2
2337	A1	9390	C2
2347	A2	9392	C1
2357	A3	9398	A3
2370	B1	9399	A3
2372	B1	9401	A4
2373	B1	9403	C4
2381	B2	9409	A4
2382	C1	9410	B4
2383	B2		
2384	B2		
2397	C3		
2398	C3		
2411	C4		
3329	A3		
3333	A1		
3334	B2		
3335	B2		
3343	A1		
3344	B2		
3345	A3		
3353	A2		
3354	A3		
3355	B3		
3360	A4		
3372	B1		
3373	B1		
3374	B1		
3382	A4		
3383	C3		
3385	C2		
3386	A4		
3392	A3		
3396	C3		
3397	B3		
3404	C1		
3414	C1		
3422	C4		
3470	C4		
3472	C4		
3473	C4		
3478	B4		
3493	B4		
5372	C1		
5373	C1		
5401	A3		
5402	A3		
5403	A4		
6371	A4		
6373	C2		
6374	B1		
7330	A1		
7340	A2		
7350	A2		
7412	C4		
7413	C4		
7414	C4		
7415	B4		
9301	A4		

Layout CRT / Auto SCAVEM Panel (Bottom View)

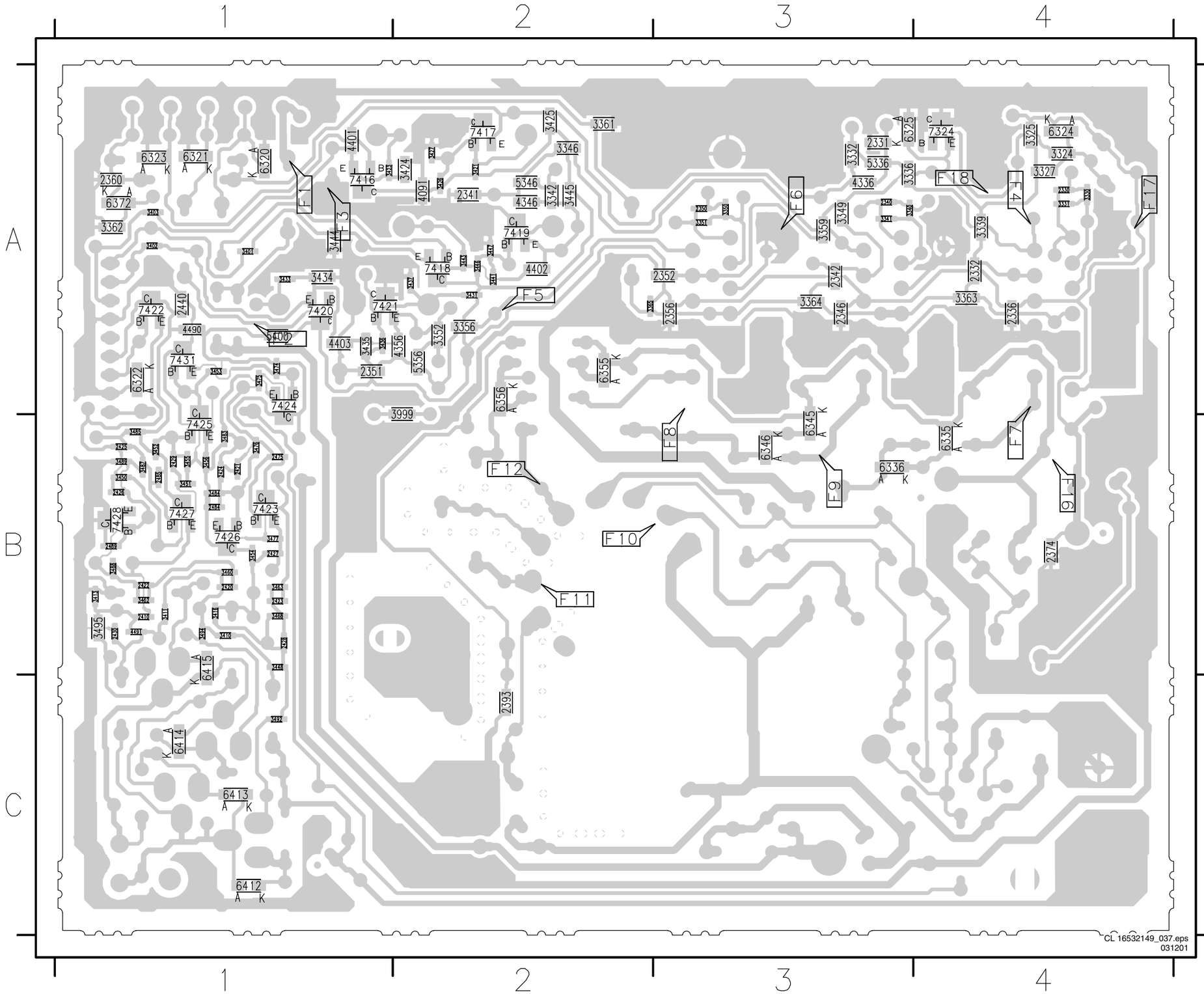

2330	A4	3433	A1	7417	A2
2331	A3	3434	A1	7418	A2
2332	A4	3435	A1	7419	A2
2336	A4	3436	A1	7420	A1
2340	A3	3437	A2	7421	A1
2341	A2	3441	A2	7422	A1
2342	A3	3443	A2	7423	B1
2346	A3	3444	A1	7424	B1
2350	A3	3445	A2	7425	B1
2351	A1	3446	A2	7426	B1
2352	A3	3447	A2	7427	B1
2356	A3	3448	B1	7428	B1
2360	A1	3450	B1	7431	A1
2374	B4	3451	B1		
2393	C2	3452	B1		
2410	B1	3453	A1		
2420	B1	3454	B1		
2421	B1	3455	B1		
2422	B1	3456	B1		
2423	B1	3460	B1		
2424	B1	3462	B1		
2425	B1	3463	B1		
2426	B1	3468	B1		
2427	B1	3474	A1		
2428	B1	3475	A1		
2429	B1	3476	B1		
2430	B1	3477	B1		
2440	A1	3483	B1		
2475	B1	3484	B1		
2484	B1	3485	B1		
2485	B1	3487	B1		
2489	B1	3488	B1		
3324	A4	3489	B1		
3325	A4	3492	C1		
3327	A4	3494	B1		
3330	A4	3495	B1		
3331	A4	3999	A2		
3332	A3	4091	A2		
3336	A3	4336	A3		
3339	A4	4346	A2		
3340	A3	4356	A2		
3341	A3	4401	A1		
3342	A2	4402	A2		
3346	A2	4403	A1		
3349	A3	4490	A1		
3350	A3	4491	B1		
3351	A3	5336	A3		
3352	A2	5346	A2		
3356	A2	5356	A2		
3359	A3	5400	A1		
3361	A2	6320	A1		
3362	A1	6321	A1		
3363	A4	6322	A1		
3364	A3	6323	A1		
3365	A2	6324	A4		
3401	A1	6325	A4		
3402	A1	6335	B4		
3403	A1	6336	B3		
3410	B1	6345	B3		
3411	B1	6346	B3		
3413	B1	6355	A2		
3416	B1	6356	A2		
3421	A2	6372	A1		
3423	A1	6412	C1		
3424	A2	6413	C1		
3425	A2	6414	C1		
3426	A2	6415	B1		
3427	A2	7324	A4		
3431	A2	7416	A1		

DC Shift Panel

0393 A1 2031 B3 2033 B2 3031 A3 3040 C4 6030 A2 9030 B3
2030 A2 2032 B3 3030 C4 3032 B3 5030 B4 6033 C2 9031 B3

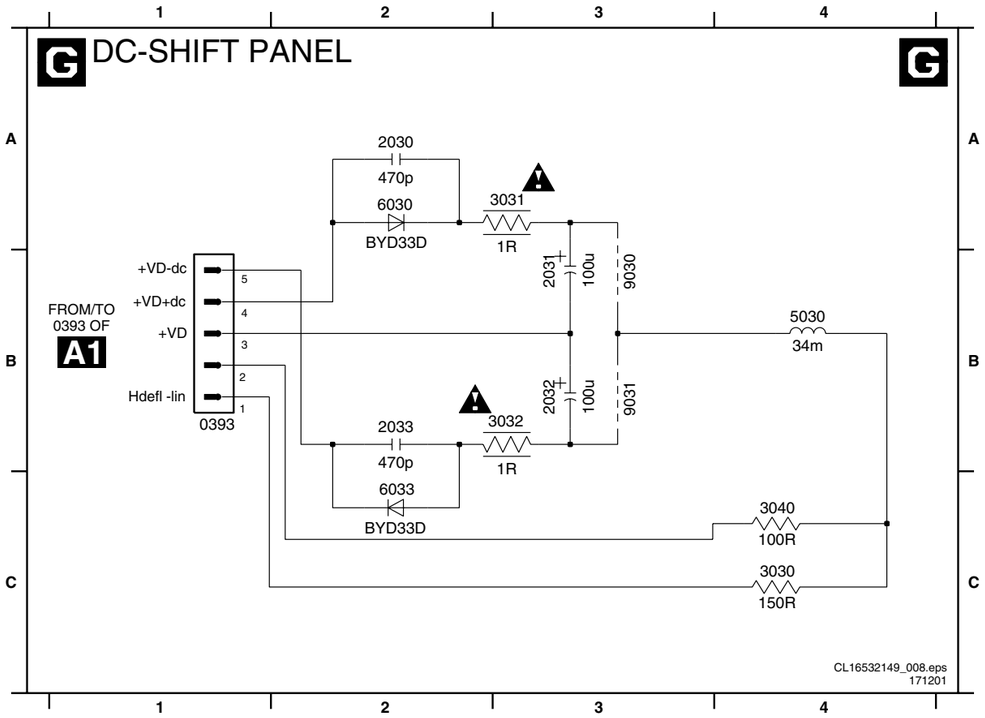

Layout DC Shift Panel

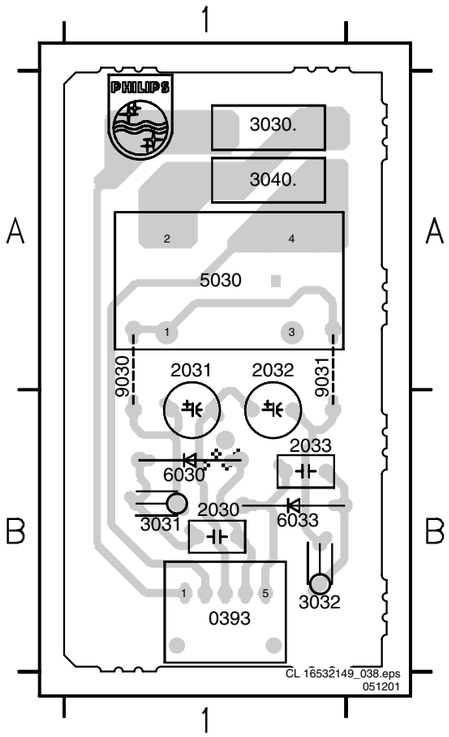

0393 B1
2030 B1
2031 B1
2032 B1
2033 B1
3030 A1
3031 B1
3032 B1
3040 A1
5030 A1
6030 B1
6033 B1
9030 B1
9031 B1

DAF Panel

0317 B1 0396 A1 2800 B2 2812 E2 2816 C2 3810 C3 3814 D4 3899 B4 6811 E1 9801 A4
0340 C4 0397 A4 2803 B3 2813 E3 2890 B3 3811 D3 3815 D3 3998 C3 6812 D3
0391 B4 0398 D1 2810 C1 2814 E4 2891 B3 3812 E4 3897 B1 5800 A2 7810 D4
0394 E1 1392 A4 2811 E1 2815 E3 3050 C1 3813 E2 3898 A4 6810 C2 9800 B4

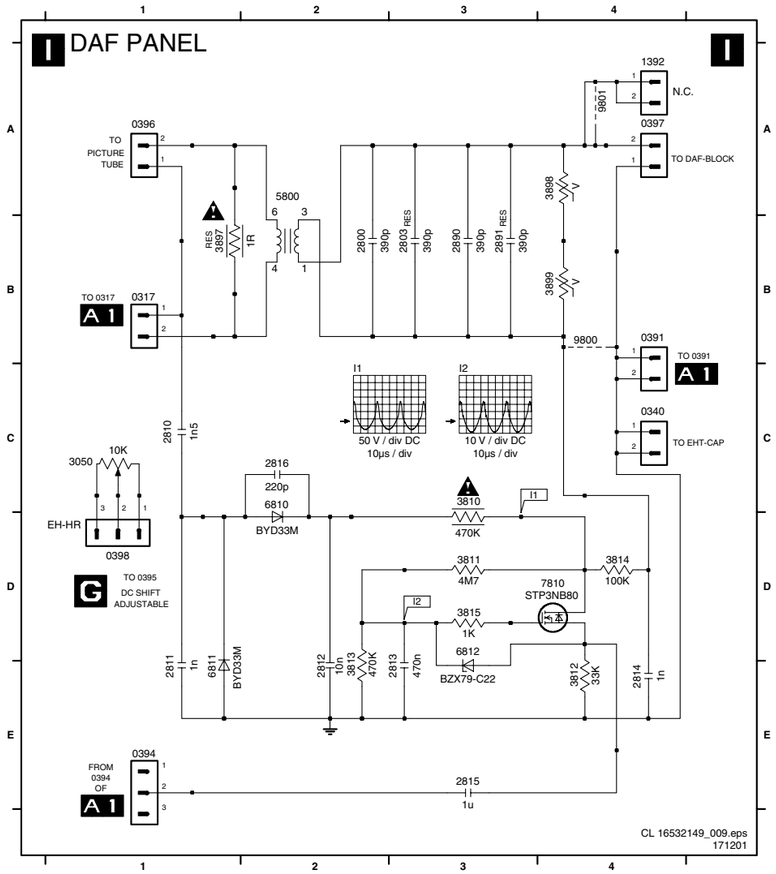

Layout DAF Panel

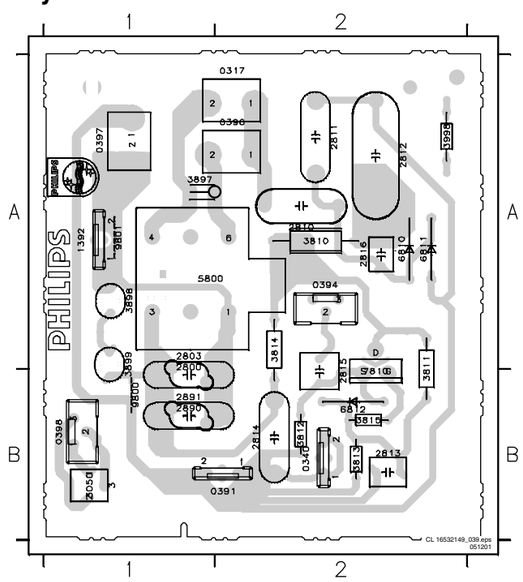

0317 A2
0340 B2
0391 B2
0394 A2
0396 A2
0397 A1
0398 B1
1392 A1
2800 A2
2803 A1
2810 A2
2811 A2
2812 A2
2813 B2
2814 B2
2815 A2
2816 A2
2890 B2
2891 B1
3050 B1
3810 A2
3811 A2
3812 B2
3813 B2
3814 A2
3815 B2
3897 A1
3898 A1
3899 A1
3998 A1
5800 A2
6810 A2
6811 A2
6812 B2
7810 A2
9800 B1
9801 A1

Small Signal Board: Tuner, IF, Source Selection and Video Processing

0310 H2	1109 B6	2105 B5	2116 B2	2127 A4	2511 C13	2528 E15	2539 A7	2554 F11	2562 I14	2788 H4	3111 F5	3119 D7	3136 D8	3145 F8	3521 E14	3552 G15	3566 G10	4102 E8	4111 G7	5102 B4	5502 A8	6103 F4	7104 G4	7113 A2
1101 D3	1525 E14	2106 C4	2117 D9	2501 F9	2512 C13	2532 A13	2540 B8	2555 G11	2563 I13	3102 A2	3112 G5	3121 G7	3137 D9	3146 A2	3530 B11	3553 G15	3567 E11	4103 B9	4112 B1	5103 D4	5540 G10	6104 F4	7105 G6	7501 D11
1102 B3	1526 E14	2107 C4	2118 D8	2502 F10	2520 E13	2533 B10	2541 B8	2556 H11	2564 I14	3103 B2	3113 G4	3122 G6	3138 E8	3148 E7	3531 B12	3554 F15	3568 F11	4104 B3	4113 F7	5104 D5	5553 H15	6105 C5	7106 G7	7502 E9
1104 E6	1527 E15	2108 D4	2119 A10	2503 F10	2521 F14	2534 A13	2545 F9	2557 G12	2565 F11	3104 B1	3114 G5	3123 G6	3139 E8	3149 F7	3532 A13	3556 H14	3569 F11	4105 G6	4114 A3	5105 E7	5559 I12	6106 A2	7107 F8	7555 G15
1105 F6	1528 E15	2109 C8	2120 A3	2504 F10	2522 E14	2535 B10	2550 G12	2558 I12	2566 F9	3106 C4	3115 G5	3124 B7	3140 B1	3152 B9	3538 A8	3557 G12	3571 D14	4107 G7	4803 I9	5106 E8	5560 F13	6107 A2	7108 F7	7560 F12
1106 E7	2101 A4	2110 C9	2121 A3	2505 F10	2525 E14	2536 B10	2551 H15	2559 I12	2567 G12	3107 D5	3116 F4	3133 B5	3141 B1	3153 B9	3545 F9	3558 H12	3590 G15	4108 G7	4804 H10	5108 C8	5562 I12	7101 D5	7109 E7	7561 F11
1107 E8	2102 B4	2111 C8	2122 D9	2506 F10	2526 E14	2537 B10	2552 H15	2560 F12	2569 H3	3109 E4	3117 F5	3134 D5	3142 B10	3154 A2	3546 G9	3560 F9	3999 A6	4109 G8	4809 G14	5109 C2	6101 B4	7102 E5	7111 D9	
1108 D6	2104 B4	2112 A10	2125 B2	2510 C13	2527 E15	2538 A7	2553 F15	2561 F12	2570 H11	3110 F4	3118 C9	3135 G8	3143 A10	3155 A2	3551 G14	3565 G10	4101 E4	4110 E7	5101 A4	5501 A8	6102 E4	7103 G5	7112 A9	

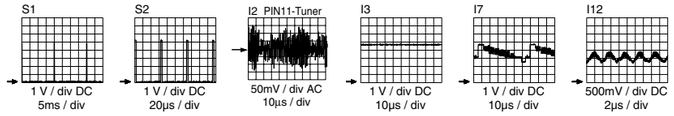

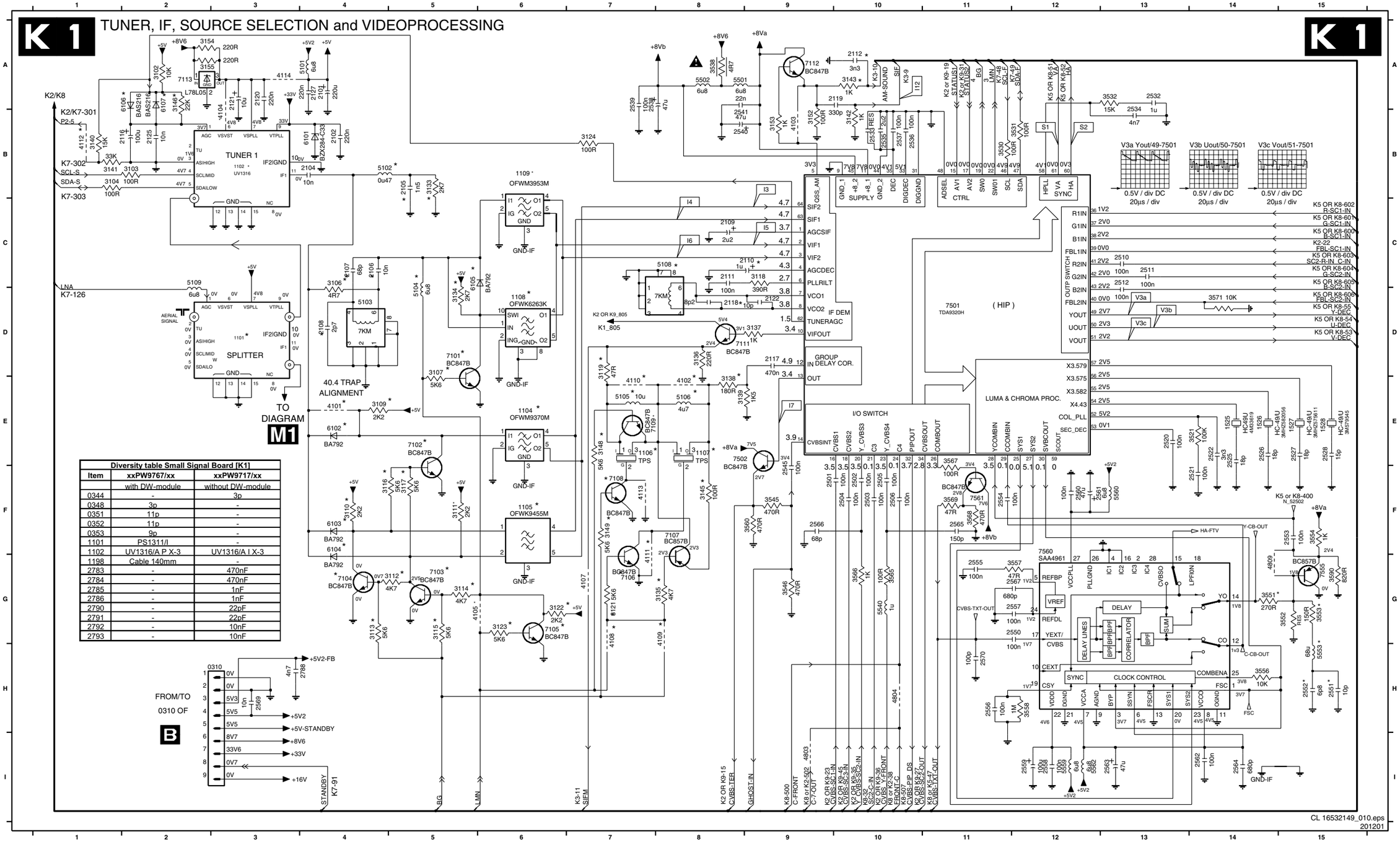

Diversity table Small Signal Board [K1]		
Item	xxPW9767/xx	xxPW9717/xx
	with DW-module	without DW-module
0344	-	3p
0348	3p	-
0351	11p	-
0352	11p	-
0353	9p	-
1101	PS1311/I	-
1102	UV1316/A P X-3	UV1316/A I X-3
1198	Cable 140mm	-
2783	-	470nF
2784	-	470nF
2785	-	1nF
2786	-	1nF
2790	-	22pF
2791	-	22pF
2792	-	10nF
2793	-	10nF

Small Signal Board: Input / Output

0333 F7	2126 H8	2215 B7	2228 H2	3204 C2	3215 C4	3227 G12	3241 C11	3252 F8	3270 E11	4228 G6	6206 B4	6216 B7	6226 D10	6236 G2	6261 F1
0376 H8	2202 B2	2216 B7	2229 H2	3205 D1	3216 C4	3228 E6	3242 C12	3253 F8	3271 F11	4229 B5	6207 C4	6217 C7	6227 D11	6237 H2	7200 D2
0381 C2	2203 B2	2217 B11	2235 F1	3206 D2	3218 C3	3229 F6	3243 F9	3254 E4	3272 G1	4230 B5	6208 B5	6218 C7	6228 E10	6239 C10	7201 E6
1200-A E1	2204 D2	2218 G6	2240 E11	3207 D2	3219 B4	3230 F6	3244 B11	3255 F4	3273 G11	4235 D12	6209 C5	6219 D7	6229 E4	6240 E12	7203 F9
1200-B E2	2205 D2	2219 C11	2241 F11	3208 E12	3220 B3	3231 H12	3245 C11	3256 H4	3274 G11	6200 B1	6210 C3	6220 B11	6230 E4	6241 E12	7204 F8
1200-C E2	2206 B4	2220 C11	3147 G9	3209 E3	3221 B6	3232 E7	3246 B11	3257 G2	3280 E2	6201 C1	6211 D3	6221 B11	6231 F4	6242 F11	
1201-A A3	2209 C4	2221 F7	3200 B1	3210 D4	3222 B6	3233 G1	3247 F8	3258 G2	3826 E1	6202 B2	6212 D3	6222 C11	6232 F4	6243 F11	
1201-B E3	2210 C4	2222 F9	3201 B1	3211 D4	3223 B7	3235 D11	3248 F8	3264 F4	4201 C6	6203 C2	6213 E3	6223 B12	6233 H3	6244 H11	
1202-A A10	2212 E6	2224 E4	3202 B2	3212 E12	3224 B7	3236 D11	3249 F8	3265 G4	4226 H6	6204 D2	6214 B6	6224 C12	6234 G1	6259 C2	
1202-B E10	2213 E6	2226 F4	3203 B2	3213 C3	3225 D6	3240 C11	3250 F7	3266 F8	4227 H6	6205 B4	6215 C6	6225 C10	6235 H1	6260 F1	

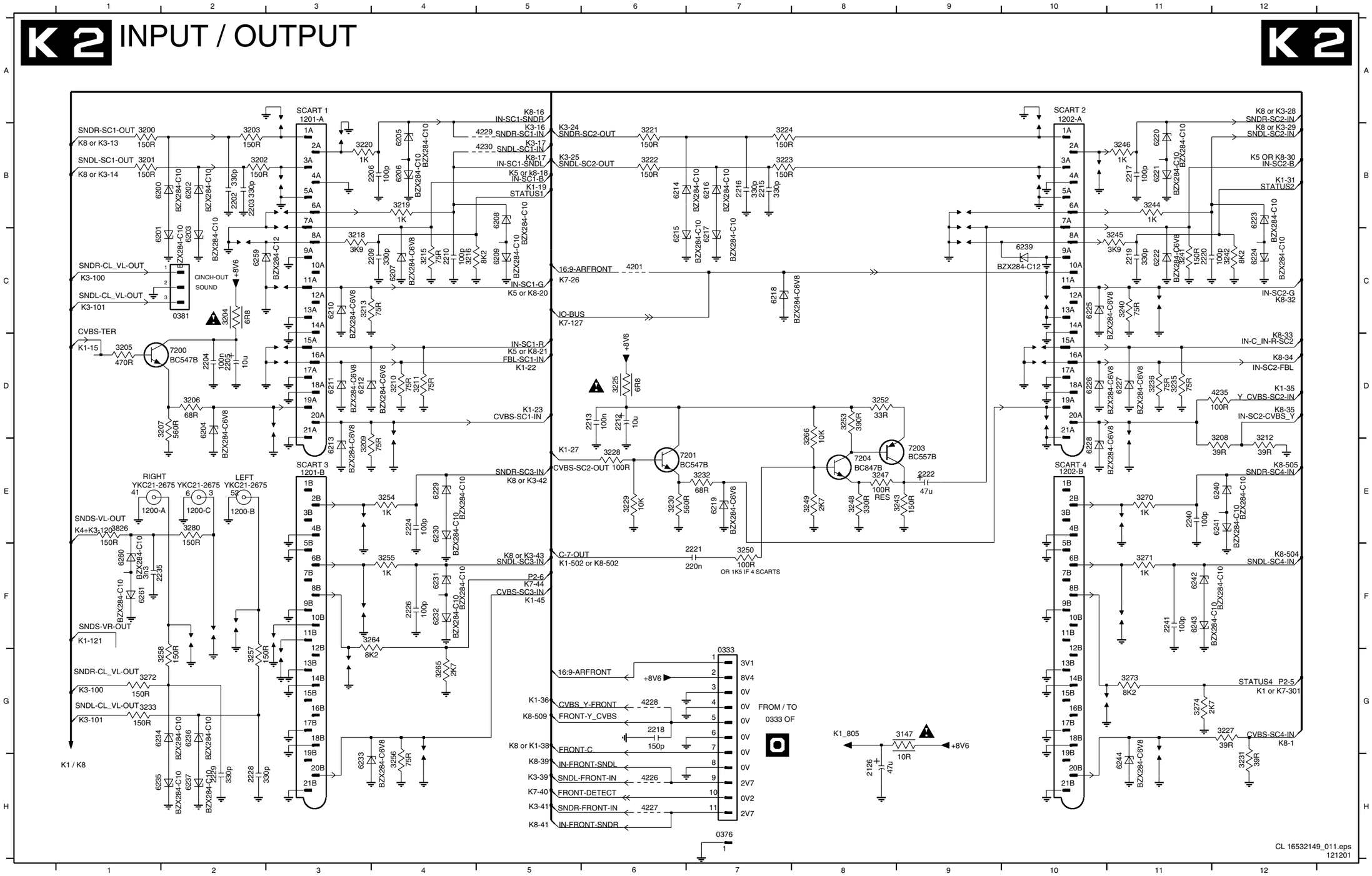

Small Signal Board: Sound Processing

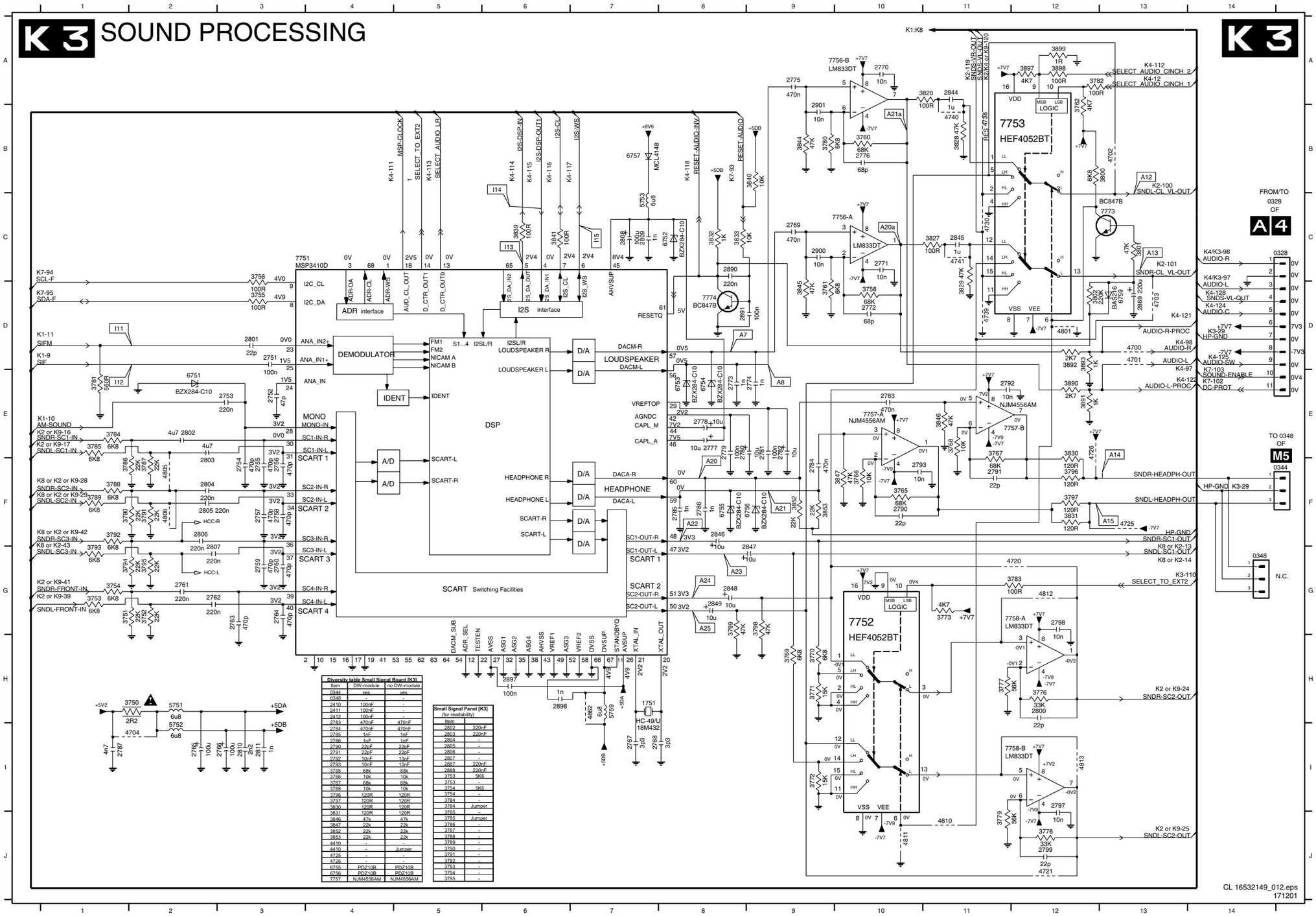

Diversity table Small Signal Board [K3]		
Item	DW-module	no DW-module
0344	yes	yes
0348	-	-
2410	100nF	-
2411	100nF	-
2412	100nF	-
2783	470nF	470nF
2784	470nF	470nF
2785	1nF	1nF
2786	1nF	1nF
2790	22pF	22pF
2791	22pF	22pF
2792	10nF	10nF
2793	10nF	10nF
3765	68k	68k
3766	10k	10k
3767	68k	68k
3768	10k	10k
3796	120R	120R
3797	120R	120R
3830	120R	120R
3831	120R	120R
3846	47k	47k
3847	22k	22k
3852	22k	22k
3853	22k	22k
4410	-	-
4410	-	Jumper
4725	-	-
4726	-	-
6755	PDZ10B	PDZ10B
6756	PDZ10B	PDZ10B
7757	NJM4556AM	NJM4556AM

Small Signal Panel [K3] (for readability)
Item
2802
2803
2804
2805
2806
2807
2887
2888
3753
3753
3754
3754
3784
3784
3785
3785
3786
3787
3788
3789
3790
3791
3792
3793
3794
3795

Small Signal Panel [K3+K4]		
Item	wired dolby	wireless dolby
2769	470nF	470nF
2770	10nF	-
2771	10nF	-
2772	22pF	-
2773	1nF	-
2774	1nF	-
2775	470nF	470nF
2776	22pF	-
2813	10nF	-
2814	10nF	-
2815	10nF	-
2816	100 F	-
2817	10nF	-
2818	100 F	-
2819	100 F	-
2820	1nF	-
2821	10nF	-
2822	1nF	-
2824	100 F	-
2825	10nF	-
2826	22pF	-
2827	1nF	-
2828	10nF	-
2829	1nF	-
2830	10nF	-
2831	100 F	-
2832	22nF	-
2833	22nF	-
2836	47pF	-
2837	10nF	-
2838	22pF	-
2839	10nF	-
2840	10nF	-
2841	470nF	-
2844	1 F	-
2845	1 F	-
2892	470nF	-
2895	10nF	-
3758	47k	-
3760	47k	-
3761	6k8	-
3762	4k7	-
3780	8k8	-
3782	100R	-
3811	100R	-
3812	100R	-
3813	100R	-
3814	100R	-
3817	100k	-
3818	100R	-
3819	100R	-
3820	100R	-
3821	3k3	-
3822	33k	-
3823	4k7	-
3824	100R	-
3825	56k	-
3827	100R	-
3828	47k	-
3829	47k	-
3837	56k	-
3838	100R	-
3839	100R	-
3841	100R	-
3842	47k	-
3844	47k	-
3845	47k	-
3848	100R	-
3849	100R	-
3890	2k7	-
3891	1k	-
3892	2k7	-
3892	Jumper	-
3893	1k	-
3894	47k	-
3897	4k7	-
3898	100R	-
4700	Jumper	-
4701	Jumper	-
4702	Jumper	Jumper
4703	Jumper	Jumper
4730	Jumper	-
4739	Jumper	-
5754	6,8 H	-
5755	6,8 H	-
5756	6,8 H	-
6753	PDZ10B	-
6754	PDZ10B	PDZ10B
7750	LF33CV	-
7753	HEF4052BT	-
7756	LM833DR2	-
7770	SAA7712H/N203	-
7772	LM833DR2	-
7775	HEF4052BT	-

0328 C14	3845 D9	7751 C3
0344 F14	3846 E11	7752 G10
0348 G14	3847 F10	7753 B11
1751 H7	3852 F9	7756-A C9
2751 D3	3853 F9	7756-B A9
2752 E3	3890 E12	7757-A E10
2753 E3	3891 E12	7757-B E12
2754 F3	3892 D12	7758-A G11
2755 F3	3893 D12	7758-B I11
2756 F3	3897 A12	7773 C13
2757 F3	3898 A12	7774 D8
2758 F3	3899 A12	
2759 G3	4700 D13	
2760 G3	4701 D13	
2761 G2	4702 B13	
2762 G2	4703 D13	
2763 G3	4704 I2	
2764 G3	4720 G11	
2765 I2	4721 J12	
2766 I3	4725 F13	
2767 I7	4726 E12	
2768 I7	4730 C11	
2769 C9	4738 B11	
2770 A10	4739 D11	
2771 C10	4740 B11	
2772 D10	4741 C11	
2773 E8	4801 D12	
2774 E9	4805 F2	
2775 A9	4806 F2	
2776 B10	4810 J11	
2777 E8	4811 J10	
2778 E8	4812 G12	
2779 E8	4813 I12	
2780 E8	4862 H7	
2781 E9	5751 H2	
2782 E9	5752 I2	
2783 E10	5753 C7	
2784 F9	5759 H7	
2785 F8	6751 E2	
2786 F8	6752 C8	
2787 I1	6753 E8	
2790 F10	6754 E8	
2791 F11	6755 F8	
2792 E11	6756 F9	
2793 F10	6757 B7	
2797 I12	6759 D13	
2798 G12		
2799 J12		
2800 H12		
2801 D3		
2802 E2		
2803 E2		
2804 F2		
2805 F2		
2806 F2		
2807 G2		
2808 C7		
2809 C7		
2810 I3		
2811 I3		
2844 A11		
2845 C11		
2846 F8		
2847 F9		
2848 G8		
2849 G8		
2869 D13		
2890 C8		
2891 D8		
2897 H6		
2898 H6		
2900 C9		
2901 B9		
3750 H2		
3751 G1		
3752 G2		
3753 G1		
3754 G1		
3755 D3		
3756 C3		
3758 D10		
3760 B10		
3761 D9		
3762 B12		
3765 F10		
3766 F10		
3767 E11		
3768 E11		
3769 H9		
3770 H9		
3771 H9		
3772 I9		
3773 G11		
3776 H12		
3777 H11		
3778 J12		
3779 J11		
3780 B9		
3781 E1		
3782 A12		
3783 G11		
3784 E1		
3785 E1		
3786 F1		
3787 F2		
3788 F1		
3789 F1		
3790 F1		
3791 F2		
3792 F1		
3793 G1		
3794 G1		
3795 G2		
3796 F12		
3797 F12		
3798 G9		
3799 G8		
3800 B13		
3801 C13		
3802 D12		
3820 A11		
3827 C11		
3828 B11		
3829 D11		
3830 E12		
3831 F12		
3832 C8		
3833 C8		
3839 C6		
3840 B9		
3841 C6		
3844 B9		

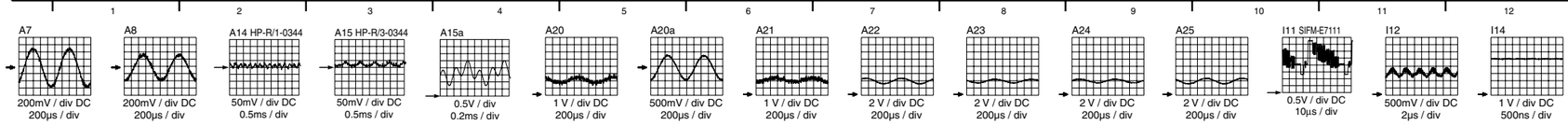

Small Signal Board: Sound Processing

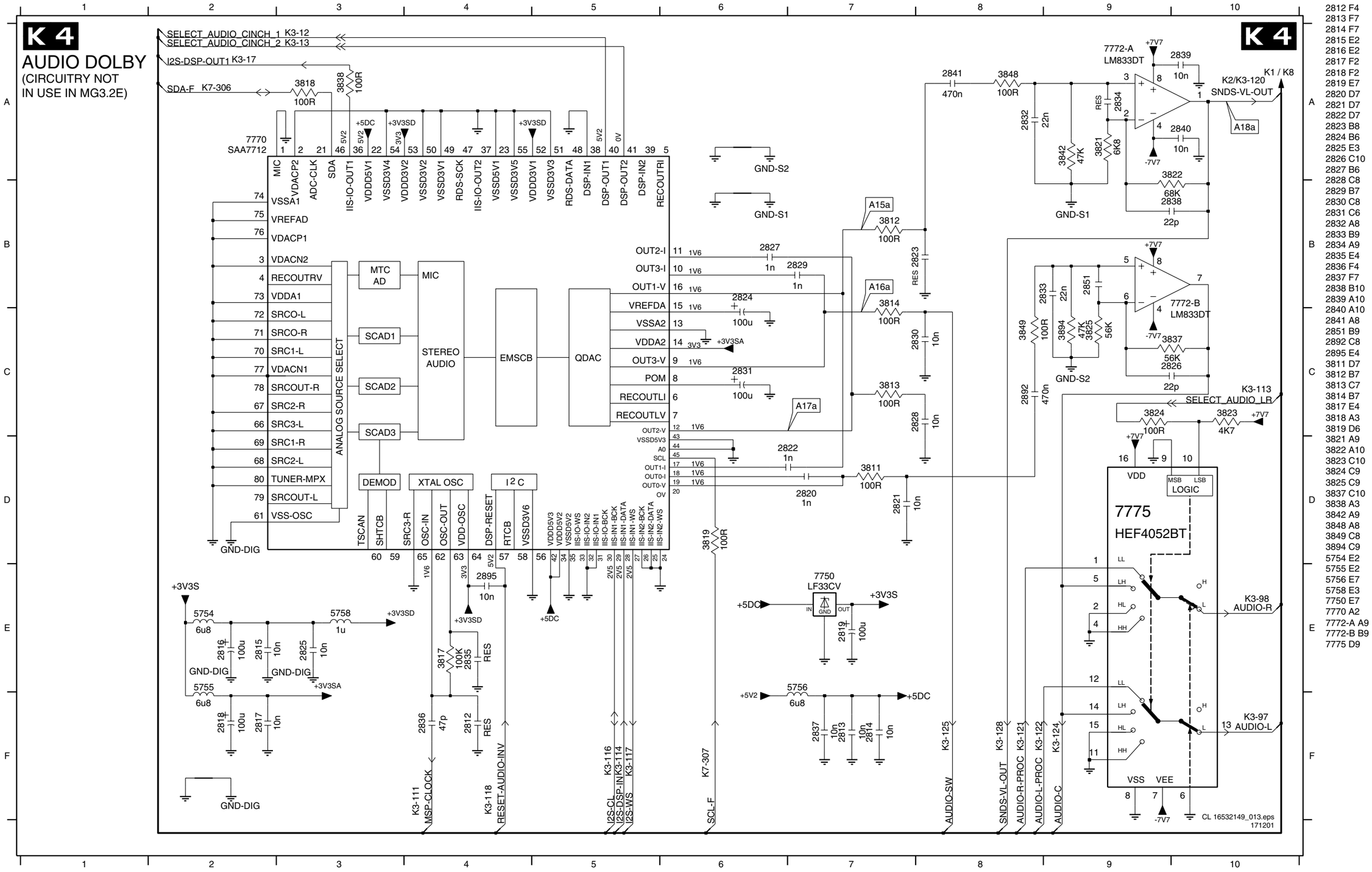

2812 F4
2813 F7
2814 F7
2815 E2
2816 E2
2817 F2
2818 F2
2819 E7
2820 D7
2821 D7
2822 D7
2823 B8
2824 B6
2825 E3
2826 C10
2827 B6
2828 C8
2829 B7
2830 C8
2831 C6
2832 A8
2833 B9
2834 A9
2835 E4
2836 F4
2837 F7
2838 B10
2839 A10
2840 A10
2841 A8
2851 B9
2892 C8
2895 E4
3811 D7
3812 B7
3813 C7
3814 B7
3817 E4
3818 A3
3819 D6
3821 A9
3822 A10
3823 C10
3824 C9
3825 C9
3837 C10
3838 A3
3842 A9
3848 A8
3849 C8
3894 C9
5754 E2
5755 E2
5756 E7
5758 E3
7750 E7
7770 A2
7772-A A9
7772-B B9
7775 D9

Small Signal Board: Video Control and Geometry

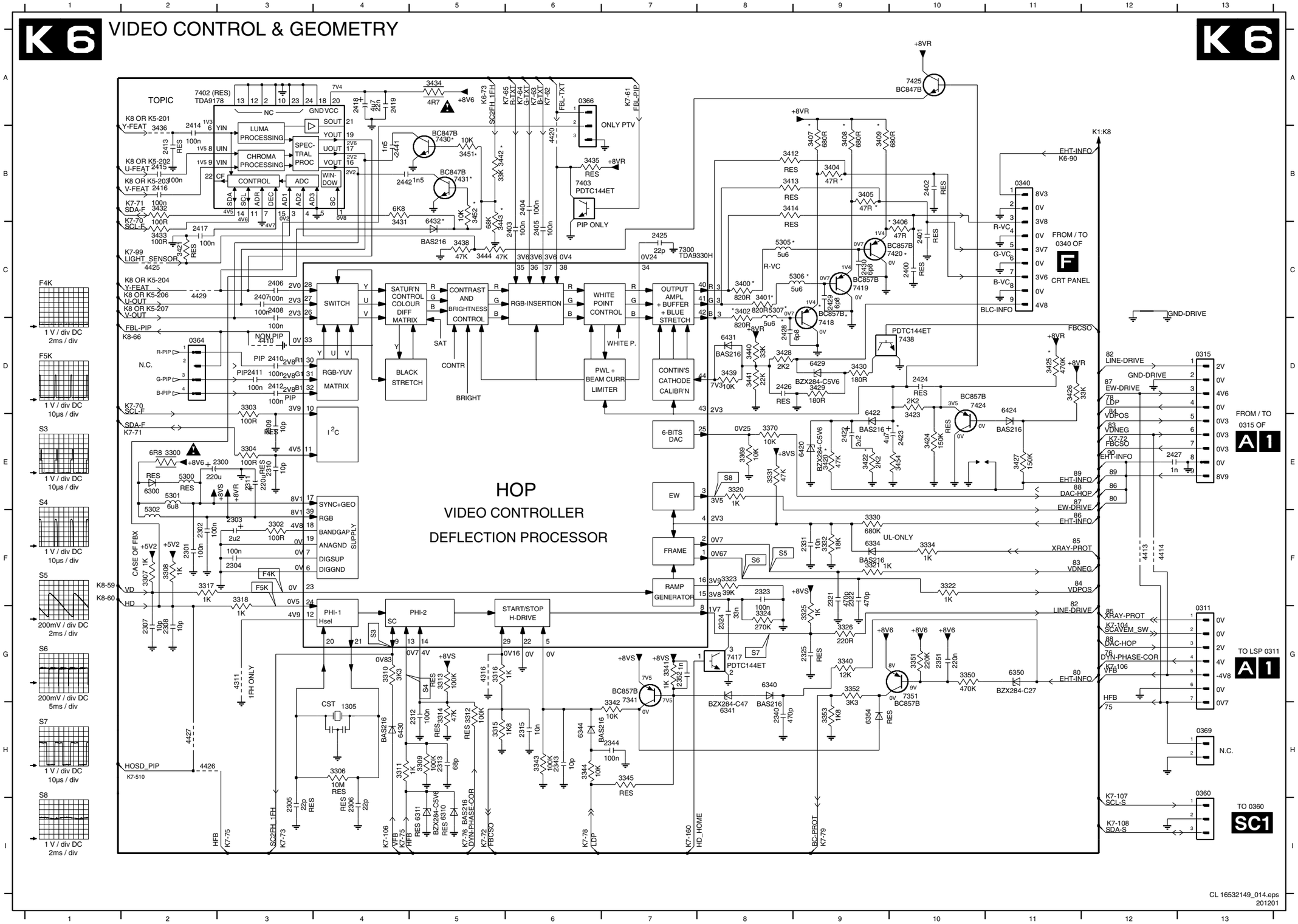

0311 G13 3407 B9
0315 D13 3408 B9
0340 B11 3409 B9
0360 H13 3412 B8
0364 D2 3413 B8
0366 A6 3414 B8
0369 H13 3420 E9
1305 H4 3421 C2
2300 E3 3422 E9
2301 F2 3423 D10
2302 F2 3424 E10
2303 F3 3425 D11
2304 F3 3426 D11
2305 I3 3427 E11
2306 I4 3428 D8
2307 G2 3429 D9
2308 G2 3430 D9
2309 E3 3431 B4
2310 E3 3432 B2
2311 E3 3433 C2
2312 H5 3434 A5
2313 H5 3435 B6
2315 H6 3436 B2
2321 F9 3438 C5
2322 F9 3439 D8
2323 F8 3440 D8
2324 G8 3441 D8
2325 G9 3442 B5
2331 F9 3443 C5
2340 H8 3444 C5
2343 H6 3451 B5
2344 H7 3452 B5
2351 G10 3454 E10
2352 G7 4311 G3
2400 C10 4316 G5
2401 C10 4410 D3
2402 B10 4413 F12
2403 C6 4414 F12
2404 B6 4420 B6
2405 C6 4425 C2
2406 C3 4426 H2
2407 C3 4427 H2
2408 C3 4429 C2
2410 D3 5300 E2
2411 D3 5301 E2
2412 D3 5302 F2
2413 B2 5305 C8
2414 B2 5306 C9
2415 B2 5307 C8
2416 B2 6300 E2
2417 C2 6310 I5
2418 A4 6311 I5
2419 A4 6334 F9
2422 E9 6340 G8
2423 E10 6341 H8
2424 D10 6344 H6
2425 C7 6350 G11
2426 D8 6354 H9
2427 E12 6420 E9
2428 D8 6422 E9
2429 C9 6424 D11
2430 C9 6429 D9
2441 B4 6430 H4
2442 B4 6431 D8
3300 E2 6432 C5
3302 F3 7300 C7
3303 D3 7341 G7
3304 E3 7351 G10
3306 H4 7402 A2
3307 F2 7403 B6
3308 F2 7417 G8
3309 H5 7418 D9
3310 G4 7419 C9
3311 H4 7420 C9
3312 H5 7424 D11
3313 G5 7425 A10
3314 H5 7430 B5
3315 H5 7431 B5
3316 G5 7438 D10
3317 F2
3318 F3
3320 E8
3321 F9
3322 F10
3323 F8
3324 G8
3325 G9
3326 G9
3330 F9
3331 E8
3332 F9
3334 F10
3340 G9
3341 G7
3342 H7
3343 H6
3344 H6
3345 H7
3350 G10
3351 G10
3352 G9
3353 H9
3369 E8
3370 E8
3400 C8
3401 C8
3402 C8
3404 B9
3405 B9
3406 C10

Small Signal Board: TXT and Control

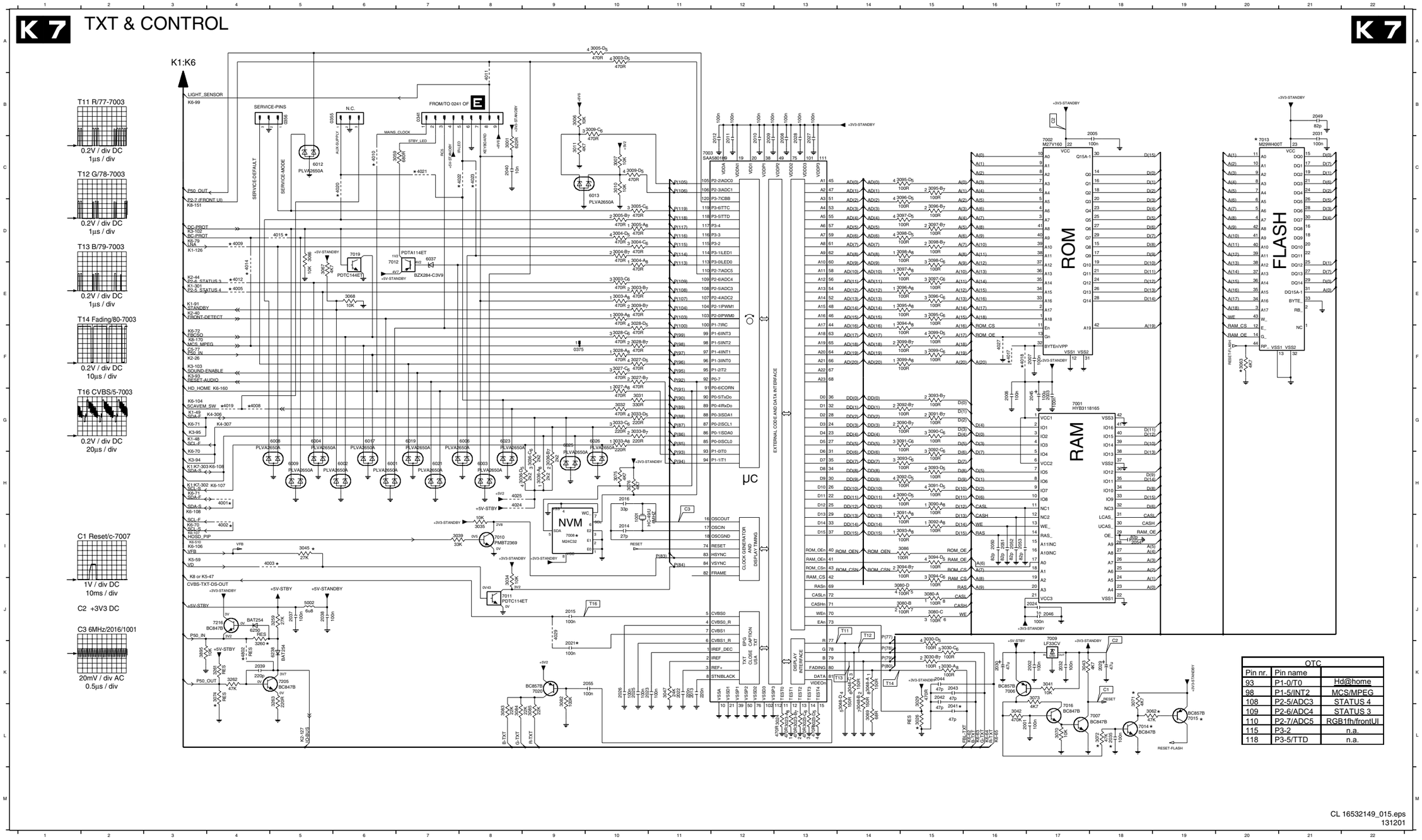

OTC		
Pin nr.	Pin name	
93	P1-0/T0	Hd@home
98	P1-5/INT2	MCS/MPEG
108	P2-5/ADC3	STATUS 4
109	P2-6/ADC4	STATUS 3
110	P2-7/ADC5	RGB1fh/frontUI
115	P3-2	n.a.
118	P3-5/TTD	n.a.

Small Signal Board: Source Selection (Additional to K1)

0312 K3	0372 I17	2249 J4	2258 G8	2437 I15	2853 F6	2862 E3	2873 E5	3239 B11	3279 J9	3289 J5	3298 I4	3570-B G9	3855 F6	3864 E2	3873 B4	3885 D3	4216 D11	4222-C I13	4412 E8	4424 C9	4612 K2	4627 K2	4742 K16	4858 K15	7209 A12
0351 A17	0373 J19	2250 I4	2259 D15	2440 A9	2854 C6	2863 D3	2880 F4	3251 C11	3281 J8	3290 G7	3299 I4	3570-C G9	3856 C6	3865 D2	3877 C5	3886 C3	4217 D12	4222-D J13	4415 B9	4430 C17	4613 K2	4728 D8	4743 K15	4859 K14	7426 F12
0352 B17	2242 G7	2251 J9	2260 K6	2507 G9	2855 G6	2864 E5	2893 G12	3267 C10	3282 K4	3291 J6	3448 G15	3570-D G9	3857 G6	3866 E7	3878 F5	3887 C3	4218 D12	4400 G16	4416 C9	4431 C17	4614 H2	4729 E8	4745 F17	5757 D5	7427 H15
0353 D18	2243 J4	2252 B12	2431 G12	2508 G9	2856 B6	2865 C4	3214 B15	3268 D10	3283 K4	3292 H7	3449 G15	3583 A15	3858 B6	3867 E8	3879 C6	3888 D3	4219-A E11	4401 G16	4417 D9	4432 C18	4615 H2	4732 F3	4750 D8	6039 E16	7575 A16
0361 F17	2244 K4	2253 B12	2432 H12	2509 G9	2857 G6	2867 D3	3217 C15	3269 J6	3284 H6	3293 I7	3450 H15	3584 A16	3859 G6	3868 E2	3880 G6	4006 E16	4219-B E11	4402 G16	4421-A J13	4433 D9	4616 I2	4733 F3	4751 F8	6040 E17	7701 C3
0362 G17	2245 J5	2254 C12	2433 F12	2568 G2	2858 B6	2868 E3	3226 C15	3275 I9	3285 I6	3294 J7	3453 H11	3585 A17	3860 B6	3869 D2	3881 B6	4202 J9	4219-C E11	4403 G16	4421-B J13	4434 K2	4617 I2	4734 F3	4807 C2	6750 A16	7776 D4
0368 K17	2246 K6	2255 B12	2434 G12	2842 D2	2859 H6	2870 C6	3234 I4	3276 I8	3286 J4	3295 K7	3460 E17	3850 B6	3861 H6	3870 F2	3882 G6	4203 I10	4219-D E11	4406 I2	4421-C J13	4435 K2	4618 J2	4735 F2	4853 G2	7206 J8	7777 D5
0370 G19	2247 H6	2256 B12	2435 G12	2843 C2	2860 D6	2871 F6	3237 I5	3277 J8	3287 K4	3296 I7	3461 E17	3851 H6	3862 E2	3871 E2	3883 D2	4212 F2	4222-A J13	4407 J2	4421-D K13	4436 F17	4619 J2	4736 E5	4856 K15	7207 J9	7801 C4
0371 I19	2248 I5	2257 C12	2436 I15	2852 C6	2861 F5	2872 E5	3238 K4	3278 J8	3288 I5	3297 J7	3570-A H9	3854 C6	3863 D2	3872 C4	3884 C3	4215 D11	4222-B I13	4411 D8	4423 B9	4500 F2	4626 K2	4737 K14	4857 K14	7208 I5	

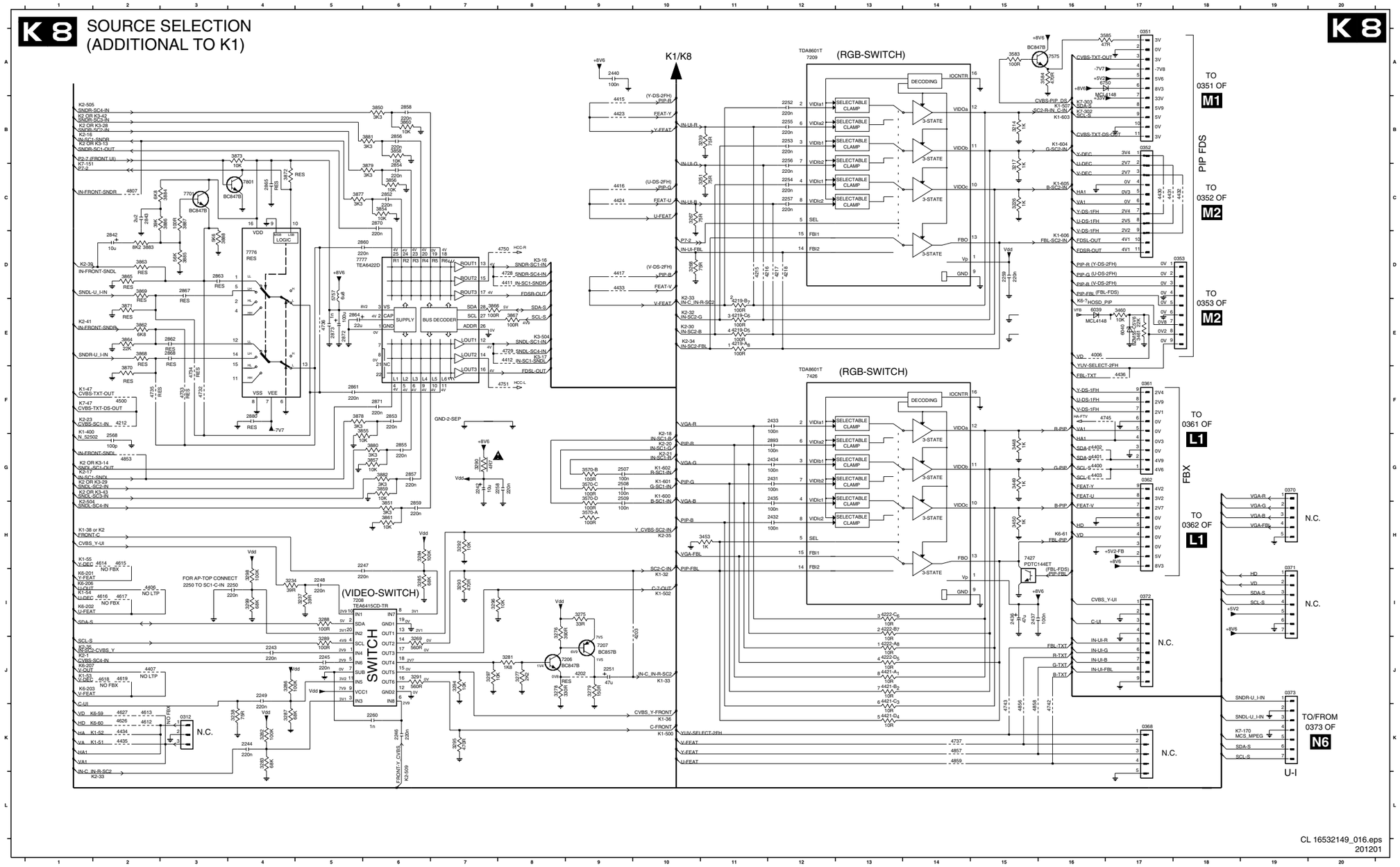

Diversity table Small Signal Board [K8]		
Item	no DW-module	DW-module
0351	-	X
0352	-	X
0353	-	X
0370	-	-
0371	-	-
2431	-	-
2432	-	-
2433	-	-
2434	-	-
2435	-	-
2437	-	-
2440	-	-
2893	-	-
3445	-	-
3446	-	-
3447	-	-
3448	-	-
3449	-	-
3450	-	-
3453	-	-
3583	-	100R
3584	-	470R
3585	-	47R
4222	-	-
4421	-	4x10R
4423	Jumper	Jumper
4424	Jumper	Jumper
4430	Jumper	-
4431	Jumper	-
4432	Jumper	-
4433	Jumper	Jumper
4436	-	Jumper
4500	Jumper	Jumper
7426	-	-
7427	-	-
7428	-	-
7429	-	-
7575	-	BC847B

Small Signal Panel [K8] (for readability)	
Item	
2842	10 F
2843	2.2 F
2852	220nF
2853	220nF
2854	220nF
2855	220nF
2856	220nF
2857	220nF
2858	220nF
2859	220nF
2860	220nF
2861	220nF
2864	22 F
2870	220nF
2871	220nF
2872	100 F
2873	1nF
3850	3k3
3851	3k3
3854	10k
3855	10k
3856	10k
3857	10k
3858	10k
3859	10k
3860	10k
3861	10k
3862	6k8
3864	22k
3866	100R
3867	100R
3877	3k3
3878	3k3
3879	3k3
3880	3k3
3881	3k3
3882	3k3
3883	8k2
3884	6k8
3885	56k
3886	39k
3887	100R
3888	5k6
4411	-
4412	-
4728	-
4729	-
4732	Jumper
4736	Jumper
5757	6.8 H
7701	BC847B
7777	TEA6422D

Layout Small Signal Board (Top Overview)

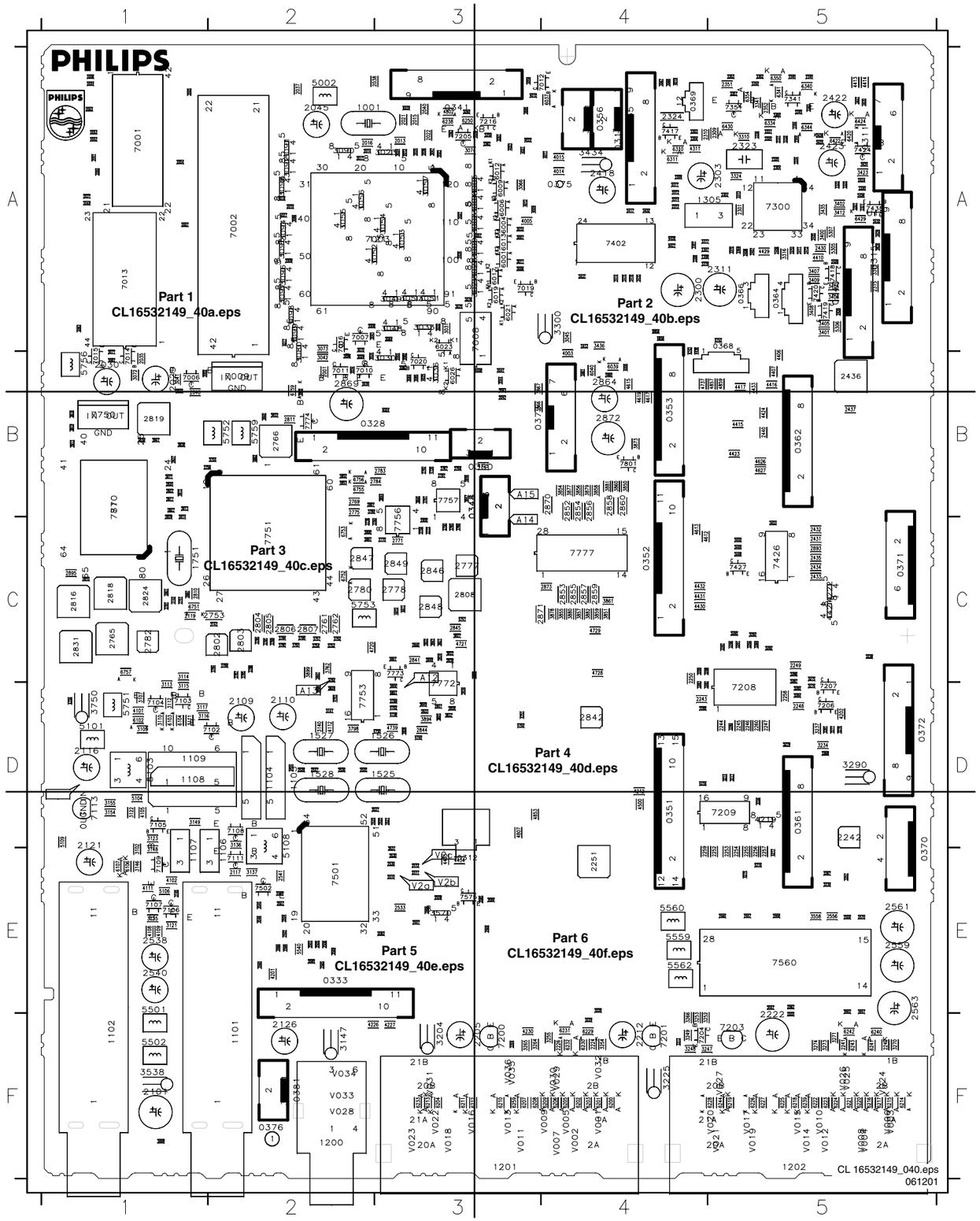

0310	A4	2037	A2	2407	A5	2772	C3	3006	A3	3121	E1	3299	C4	3551	E5	3852	B2	4421	C5	6009	A3	6755	B2
0311	A5	2038	A2	2408	A5	2775	B2	3007	A3	3122	D1	3300	A3	3552	E5	3853	B2	4423	B5	6012	A3	6756	B2
0312	D3	2039	A3	2410	A5	2776	C2	3009	A3	3123	D1	3302	A5	3557	E5	3854	B4	4424	B5	6013	A3	6757	C1
0315	A5	2040	A3	2411	A5	2777	C3	3010	A3	3124	D2	3303	A4	3558	E5	3855	C4	4426	A4	6017	A3	6759	B2
0328	B2	2041	B3	2412	A5	2778	C3	3011	A3	3135	E1	3304	A4	3560	E2	3856	B4	4427	A4	6019	A3	7001	A1
0333	E2	2042	B3	2413	A4	2780	C2	3023	A3	3136	D2	3307	A4	3565	E2	3857	C4	4429	A5	6021	A3	7002	A1
0340	A5	2043	B3	2414	A4	2782	C1	3024	A3	3137	E2	3308	A4	3566	E2	3858	B4	4430	C4	6023	A3	7003	A2
0341	A3	2044	B3	2415	A4	2783	B3	3026	B2	3140	D2	3309	A4	3569	E2	3859	C4	4431	C4	6026	B3	7006	B1
0344	C3	2045	A2	2416	A4	2784	B3	3027	A3	3141	D2	3310	A5	3570	E3	3860	B4	4432	C4	6037	A4	7007	A2
0348	B3	2046	B1	2417	A4	2790	C3	3028	A3	3142	C1	3311	A4	3583	E3	3861	C4	4433	B5	6039	B4	7008	A3
0351	D4	2049	A1	2418	A4	2791	B3	3029	B2	3143	C2	3312	A4	3584	E3	3866	B3	4434	E3	6040	B4	7009	B2
0352	C4	2050	A1	2422	A5	2792	B3	3030	A3	3145	E1	3313	A5	3585	E3	3867	B3	4435	E3	6102	D1	7010	B3
0353	B4	2051	A1	2423	A5	2801	C1	3031	A3	3146	E1	3314	A4	3750	C1	3873	B4	4436	A4	6103	D1	7011	B2
0355	A4	2052	A1	2424	A5	2802	C1	3032	A3	3147	F2	3315	A5	3751	C2	3877	B4	4500	D4	6104	D1	7012	A4
0356	A4	2053	A1	2425	A5	2803	C2	3033	A3	3148	E1	3316	A5	3752	C2	3878	C4	4612	C4	6106	D1	7013	A1
0360	B3	2054	A1	2426	A5	2804	C2	3034	B2	3149	D1	3317	A4	3753	C2	3879	B4	4613	C4	6107	D1	7014	B1
0361	D5	2055	B3	2428	A5	2805	C2	3035	B2	3154	D1	3318	A4	3754	C2	3880	C4	4615	B4	6200	F4	7015	B1
0362	B5	2101	F1	2429	A5	2806	C2	3036	B3	3155	D1	3320	A5	3755	B2	3881	B4	4617	B4	6201	F4	7016	A2
0364	A5	2109	D2	2430	A5	2807	C2	3039	B2	3204	F3	3321	A5	3756	B1	3882	C4	4619	B4	6202	F4	7019	A3
0366	A5	2110	D2	2431	C5	2808	C3	3041	B1	3214	D5	3322	A5	3758	C3	3890	C2	4626	B5	6203	F4	7020	B3
0368	B5	2116	D1	2432	C5	2810	C1	3042	B2	3217	D5	3324	A5	3760	C2	3891	C2	4627	B5	6204	F3	7102	D2
0369	A4	2117	E2	2433	C5	2811	B2	3043	A2	3225	F4	3325	A5	3761	B3	3894	D3	4702	D3	6205	F4	7103	D1
0370	E5	2119	C1	2434	C5	2813	B1	3045	A4	3226	D5	3326	A5	3762	C2	3895	A3	4703	D2	6206	F4	7104	D1
0371	C5	2121	D1	2435	C5	2815	C1	3047	A3	3228	E4	3330	A5	3765	C3	3897	C2	4704	D1	6207	F3	7105	D1
0372	D5	2126	F2	2436	B5	2816	C1	3048	A3	3229	F4	3331	A5	3766	C3	3898	D2	4720	C2	6208	F3	7106	E1
0373	B4	2204	F3	2437	B5	2817	B1	3049	A3	3234	D5	3332	A5	3767	B3	3899	C2	4721	C3	6209	F4	7107	E1
0375	A4	2205	F3	2440	B5	2818	C1	3050	A3	3237	D5	3334	A5	3768	B3	3999	F1	4725	B3	6210	F3	7108	D2
0376	F2	2212	F4	2501	E2	2819	B1	3051	A3	3238	C5	3340	A5	3780	B2	4003	B4	4726	B3	6211	F3	7109	E1
0381	F2	2213	F4	2502	E2	2820	B1	3052	A3	3239	E5	3341	A5	3781	C1	4005	A3	4728	C4	6212	F3	7111	E2
1001	A2	2222	F5	2503	E2	2822	B1	3053	A3	3247	F4	3342	A5	3782	C2	4006	B4	4729	C4	6213	F3	7113	D1
1101	F1	2224	F4	2504	E2	2824	C1	3054	A2	3248	F4	3344	A5	3784	C2	4008	B3	4730	D3	6214	F5	7200	F3
1102	F1	2226	F4	2505	E2	2826	D3	3055	A2	3249	F4	3345	A5	3785	C2	4009	A3	4737	B4	6215	F5	7201	F4
1104	D2	2240	F5	2506	E2	2827	B1	3056	A2	3251	E5	3350	A5	3786	C2	4010	A3	4738	D3	6216	F5	7203	F5
1105	D2	2241	F5	2507	E3	2829	C1	3057	A3	3252	F4	3351	A5	3787	C2	4011	A4	4739	D3	6217	F5	7204	F5
1106	D2	2242	D5	2508	E3	2831	C1	3059	A3	3253	F4	3352	A5	3788	C2	4012	A3	4740	D3	6218	F5	7205	A3
1107	D1	2243	D4	2509	E3	2832	C3	3062	B1	3254	F4	3353	A5	3789	C2	4014	A4	4741	C3	6219	F5	7206	D5
1108	D1	2244	D5	2510	E3	2833	D3	3063	A1	3255	F4	3369	A5	3790	C2	4015	A4	4742	A5	6220	F5	7207	C5
1109	D1	2245	D5	2511	E3	2834	C3	3066	A3	3259	A3	3370	A5	3791	C2	4017	A2	4743	A4	6221	F5	7208	C5
1200	F2	2246	D5	2512	E3	2837	B1	3067	A4	3260	A3	3400	A5	3792	C2	4018	A2	4750	D3	6222	F5	7209	D4
1201	F3	2247	D5	2520	D2	2838	C3	3068	A4	3261	A3	3401	A5	3793	C2	4019	A4	4751	D3	6223	F5	7216	A3
1202	F5	2248	D5	2521	D3	2839	D3	3069	A3	3262	A3	3402	A5	3794	C2	4021	A3	4801	D3	6224	F5	7300	A5
1305	A4	2249	C5	2522	D3	2840	C3	3070	A2	3263	A3	3404	A5	3795	C2	4022	A3	4802	A3	6225	F5	7341	A5
1525	D3	2250	C4	2525	D2	2841	C3	3071	B1	3264	F3	3405	A5	3798	D2	4023	A3	4807	D3	6226	F5	7351	A5
1526	D2	2251	D4	2526	D2	2842	D4	3072	B1	3265	F3	3406	A5	3799	D3	4024	B3	4810	C3	6227	F5	7402	A4
1527	D2	2252	E5	2527	D2	2844	D3	3073	A2	3266	F4	3407	A5	3800	D3	4025	B3	4811	C3	6228	F4	7417	A4
1528	D2	2253	E5	2528	D2	2845	C3	3074	A3	3267	E5	3408	A5	3801	C3	4027	A2	4853	D3	6229	F4	7418	A5
1751	C1	2254	E5	2533	E3	2846	C3	3075	A3	3268	D5	3409	A5	3802	B2	4029	A3	4856	A4	6230	F4	7419	A5
2001	B2	2255	E5	2538	E1	2847	C2	3076	A3	3269	C5	3412	A5	3811	B1	4101	D1	4857	B5	6231	F4	7420	A5
2002	B1	2256	E5	2539	E3	2848	C3	3080	B2	3270	F5	3420	A5	3812	B1	4102	E1	4858	A4	6232	F4	7424	A5
2003	A1	2257	E5	2540	E1	2849	C3	3082	B3	3271	F5	3423	A5	3813	B1	4105	D1	4859	B5	6233	F3	7426	C5
2005	A1	2258	D5	2541	E2	2851	D3	3083	B3	3273	F5	3424	A5	3814	C1	4108	E1	4862	B2	6238	A3	7427	C5
2006	A1	2259	E4	2545	E2	2852	C4	3084	B3	3274	F5	3425	A5	3818	B1	4109	E1	5002	A2	6239	F5	7438	A5
2007	A1	2260	D5	2550	E5	2853	C4	3085	B3	3275	C5	3426	A5	3819	B1	4111	E1	5101	D1	6240	F5	7501	D2
2008	A2	2300	A4	2555	F5	2854	C4	3086	A2	3276	D5	3427	A5	3820	C3	4112	D2	5103	D1	6241	F5	7502	E2
2009	A2	2301	A5	2556	E5	2855	C4	3090	A2	3277	D5	3428	A5	3821	C3	4201	E2	5104	D1	6242	F5	7560	E5
2010	A2	2303	A5	2557	E5	2856	B4	3091	A2	3278	D5	3429	A5	3822	C3	4202	D5	5106	E1	6243	F5	7575	E3
2011	A2	2304	A5	2558	E5	2857	C4	3092	A2	3279	D5	3430	A5	3825	D3	4212	D4	5108	D2	6244	F5	7750	B1
2012	A3	2307	A4	2559	E5	2858	B4	3093	A2	3281	D5	3431	A4	3827	C3	4215	E5	5109	D1	6250	A3	7751	B2
2013	A3	2308	A4	2560	E5	2859	C4	3094	A2	3282	D4	3432	A4	3828	D3	4216	E5	5305	A5	6259	F3	7753	C2
2014	A2	2309	A5	2561	E5	2860	B4	3095	A2	3283	D4	3433	A4	3829	D2	4217	E5	5306	A5	6310	A4	7756	B3
2015	A3	2310	A4	2562	E5	2864	B4	3096	A2	3284	D5	3434	A4	3833	B2	4218	D4	5307	A5	6311	A4	7757	B3
2016	A2	2311	A5	2563	E5	2869	B2	3097	A2	3285	D5	3435	A5	3837	D3	4219	D5	5501	E1	6334	A5	7770	B1
2021	A3	2312	A4	2565	E2	2870	B3	3098	A2	3286	C5	3436	A4	3838	B1	4222	C5	5502	F1	6340	A5	7772	D3
2022	A3	2315	A5	2566	E2	2871	C3	3099	A2	3287	C5	3448	C5	3839	B1	4226	F2	5540	E2	6341	A5	7773	C3
2023	A3	2321	A5	2568	E3	2872	B4	3102	E1	3288	D4	3449	C5	3840	B2	4227	F3	5559	E4	6344	A5	7774	B2
2024	A1	2322	A5	2570	E5	2873	C4	3107	D1	3289	D5	3450	C5	3841	B1	4230	F3	5560	E4	6350	A5	7777	C4
2025	A3	2323	A5	2751	C1	2893	C5	3109	D1	3290	D5	3453	C5	3842	C3	4311	A4	5562	E4	6354	A5	7801	B4
2026	A3	2324	A4	2753	C2	2895	C1	3110	D1	3291	C5	3460	B4	3844	B3	4406	B5	5751	D1	6420	A5		
2027	A3	2325	A5	2761	C2	2897	C1	3111	D1	3292	C5	3461	B4	3845	B3	4407	B5	5752	B1	6422	A5		
2028	A3	2331	A5	2762	C2	2900	C3	3112	D1	3293	C5	3521	D3	3846	B3	4410	A5	5753	C3	6424	A5		
2029	B1	2340	A5	2765	C1	2901	B2	3113	D1	3294	C5	3530	E3	3847	B3	4413	A5	5756	B1	6429	A5		
2030	B1	2344	A5	2766	B2	3001	A3	3114	C1	3295	C5	3531	E3	3848	C3	4414	A5	5759	B2	6430	A5		
2031	A1	2351	A5	2769	B2	3003	A3	3115	D1	3296	C5	3538	F1	3849	D3	4415	B5	6001	A3	6751	C1		
2032	B1	2352	A5	2770	C3	3004	A3	3116	D1	3297	C5	3545	E2	3850	B4	4416	B5	6004	A3	6752	C2		
2035	B1	2406	A5	2771	C3	3005	A3	3117	D1	3298	C4	3546	E2	3851	C4	4417	B5	6006	A3	6753	C2		

Layout Small Signal Board (Top View Part 1)

Part 1

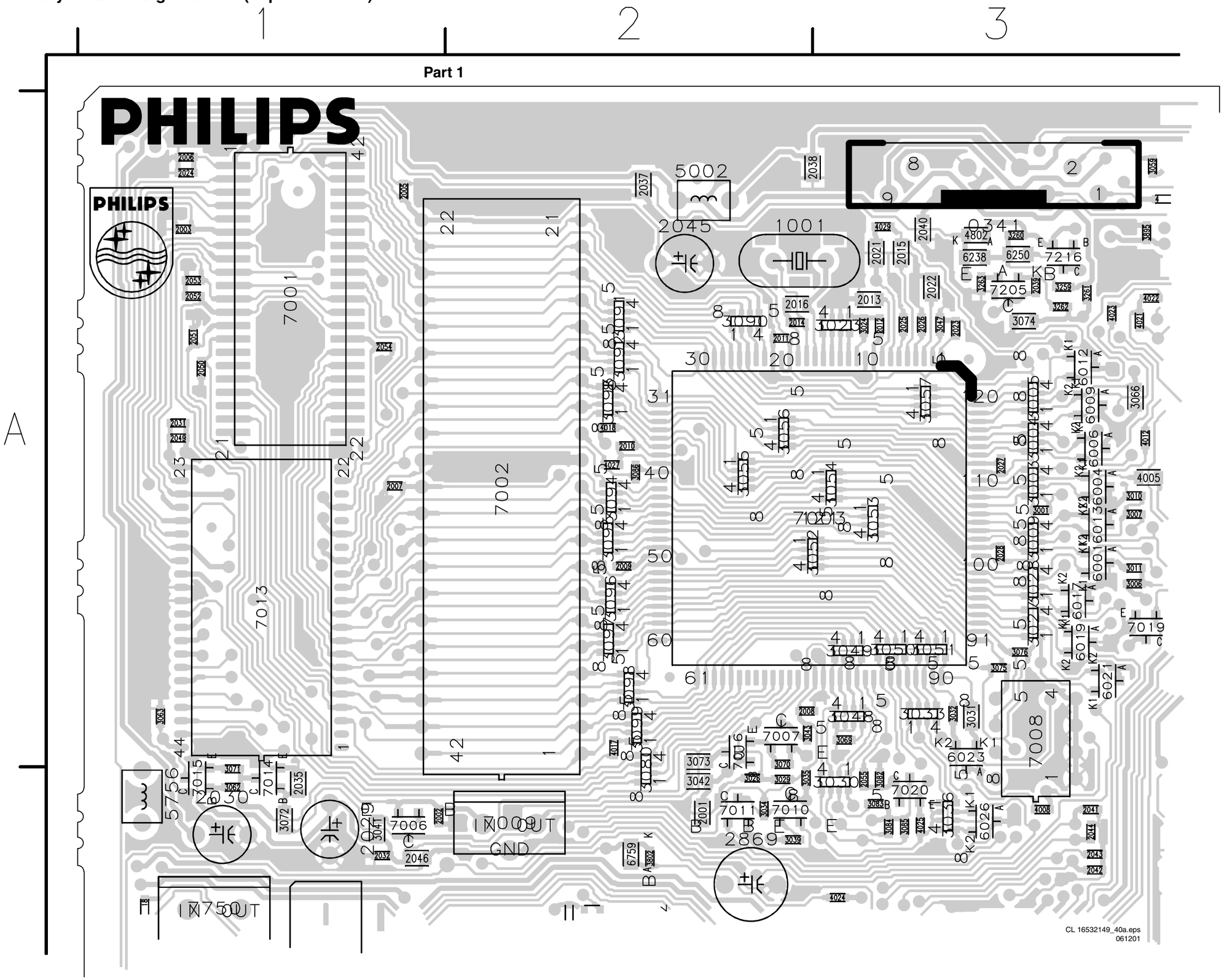

Layout Small Signal Board (Top View Part 2)

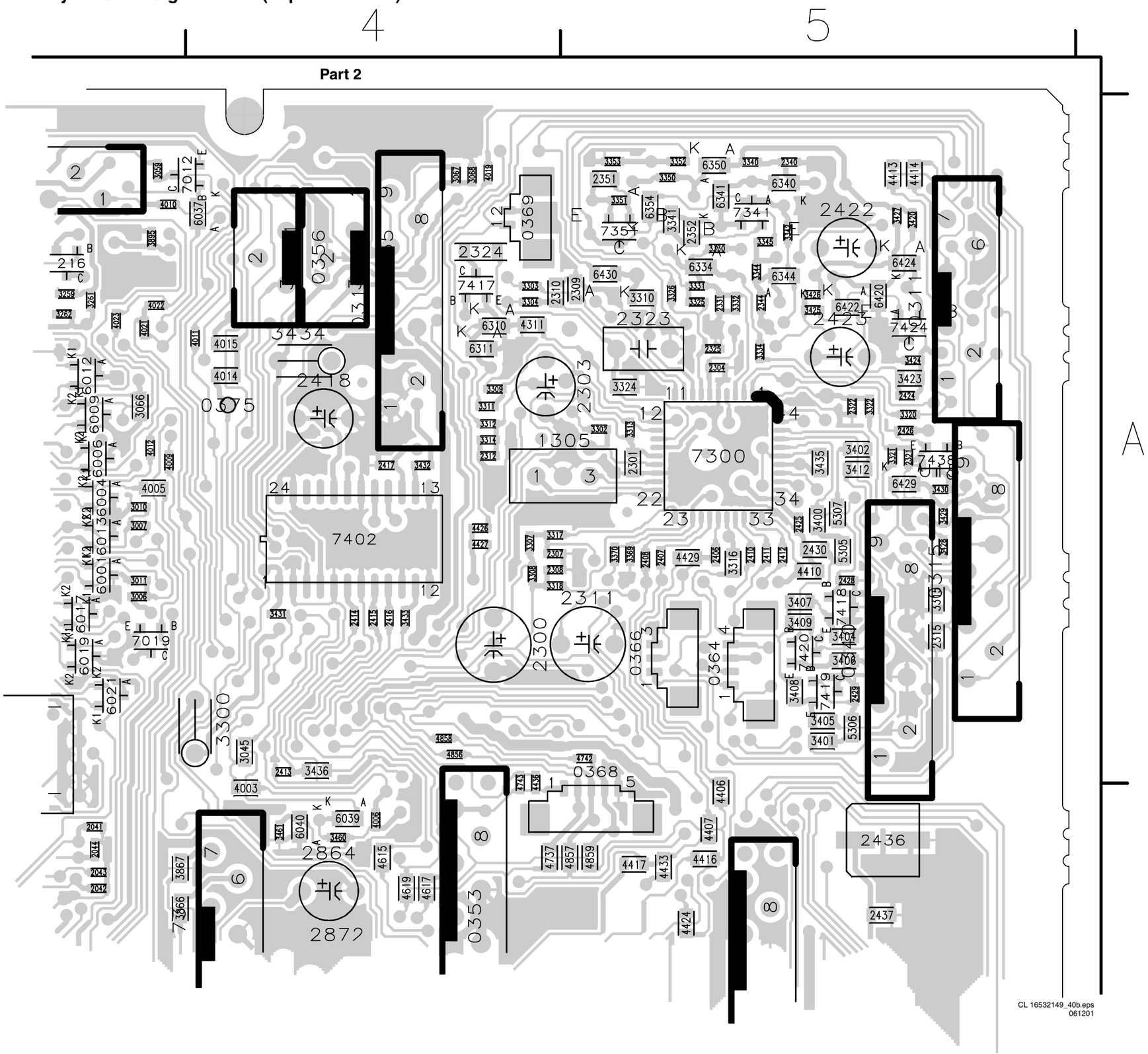

Layout Small Signal Board (Top View Part 3)

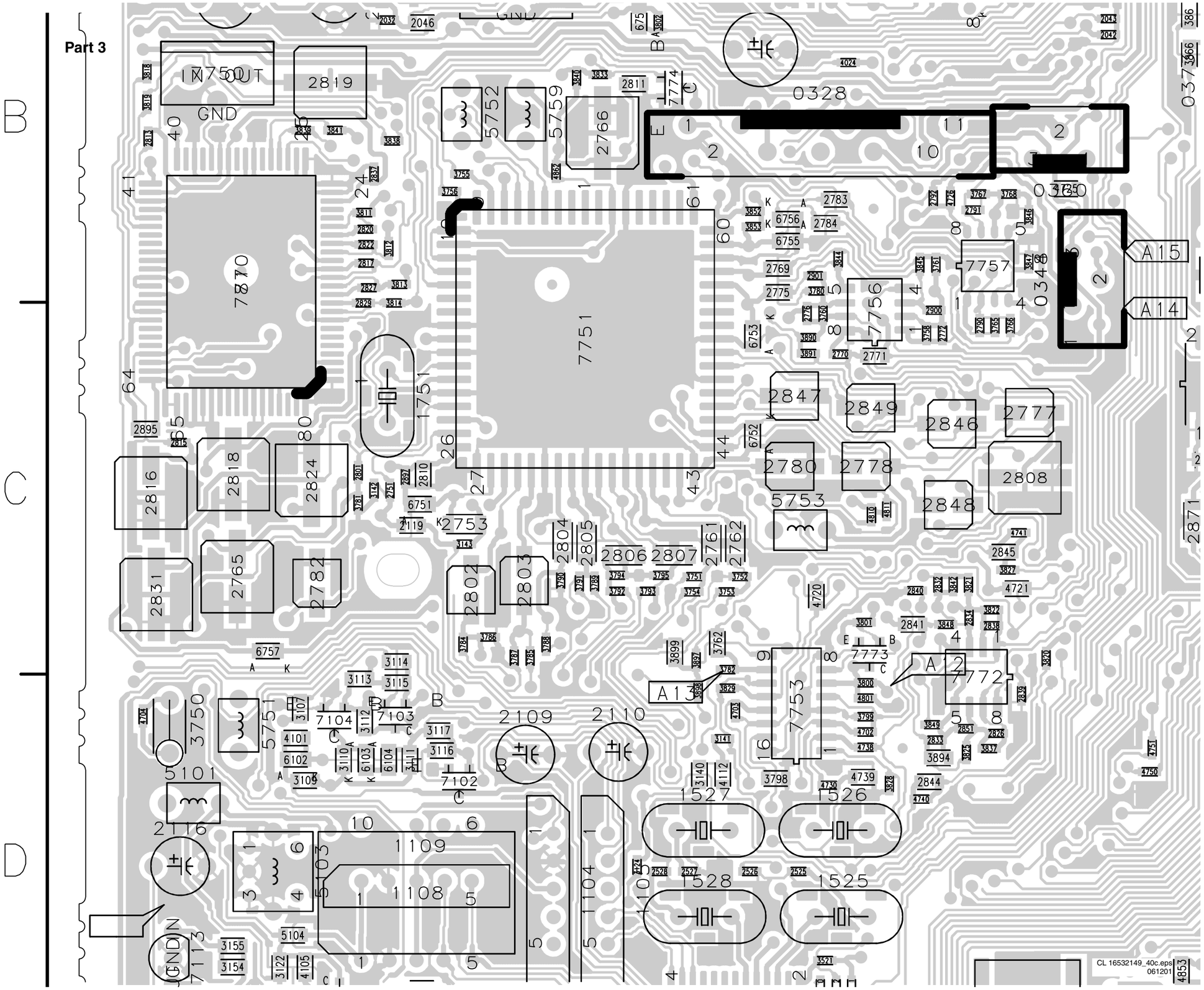

Layout Small Signal Board (Top View Part 4)

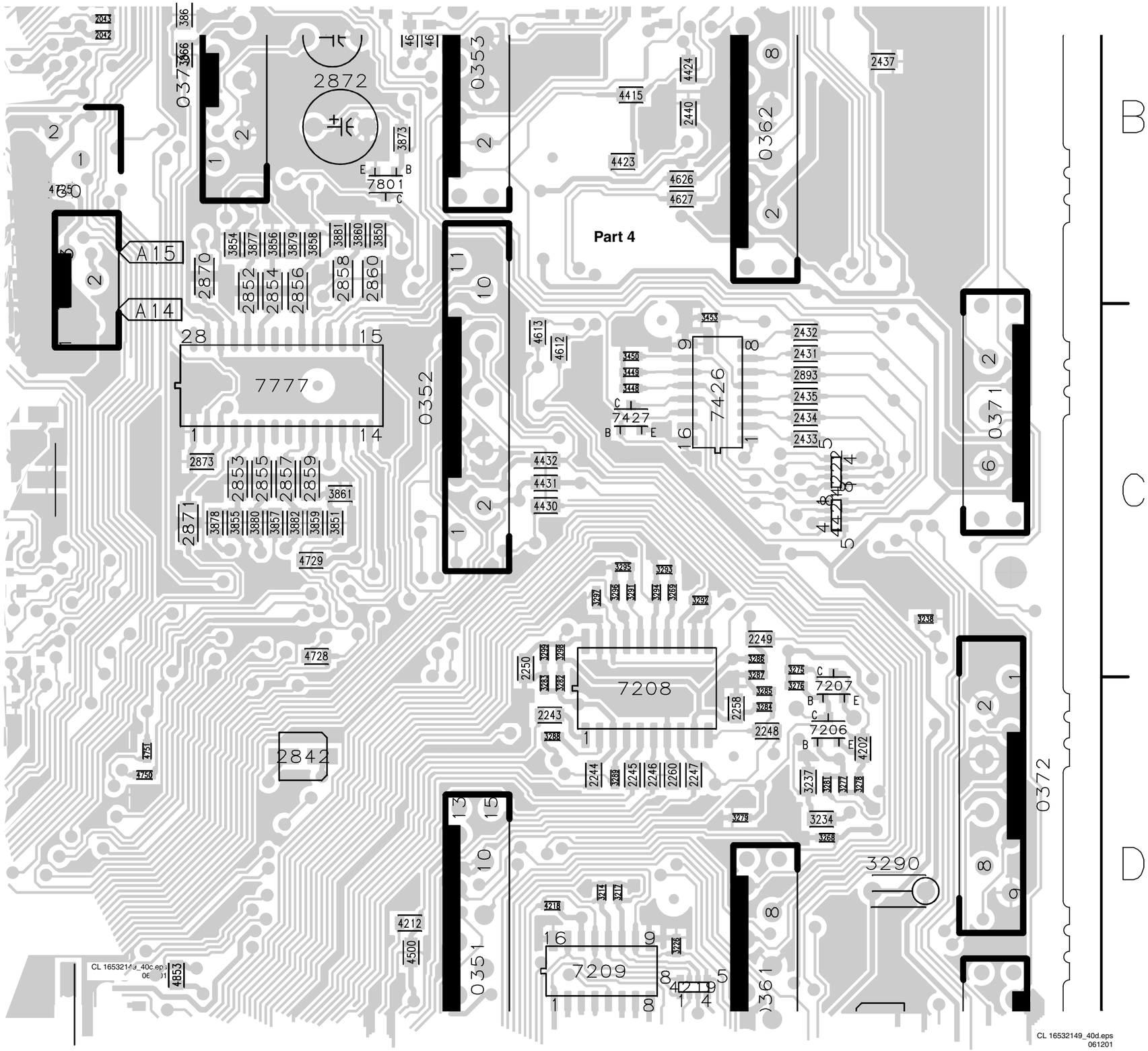

Layout Small Signal Board (Top View Part 5)

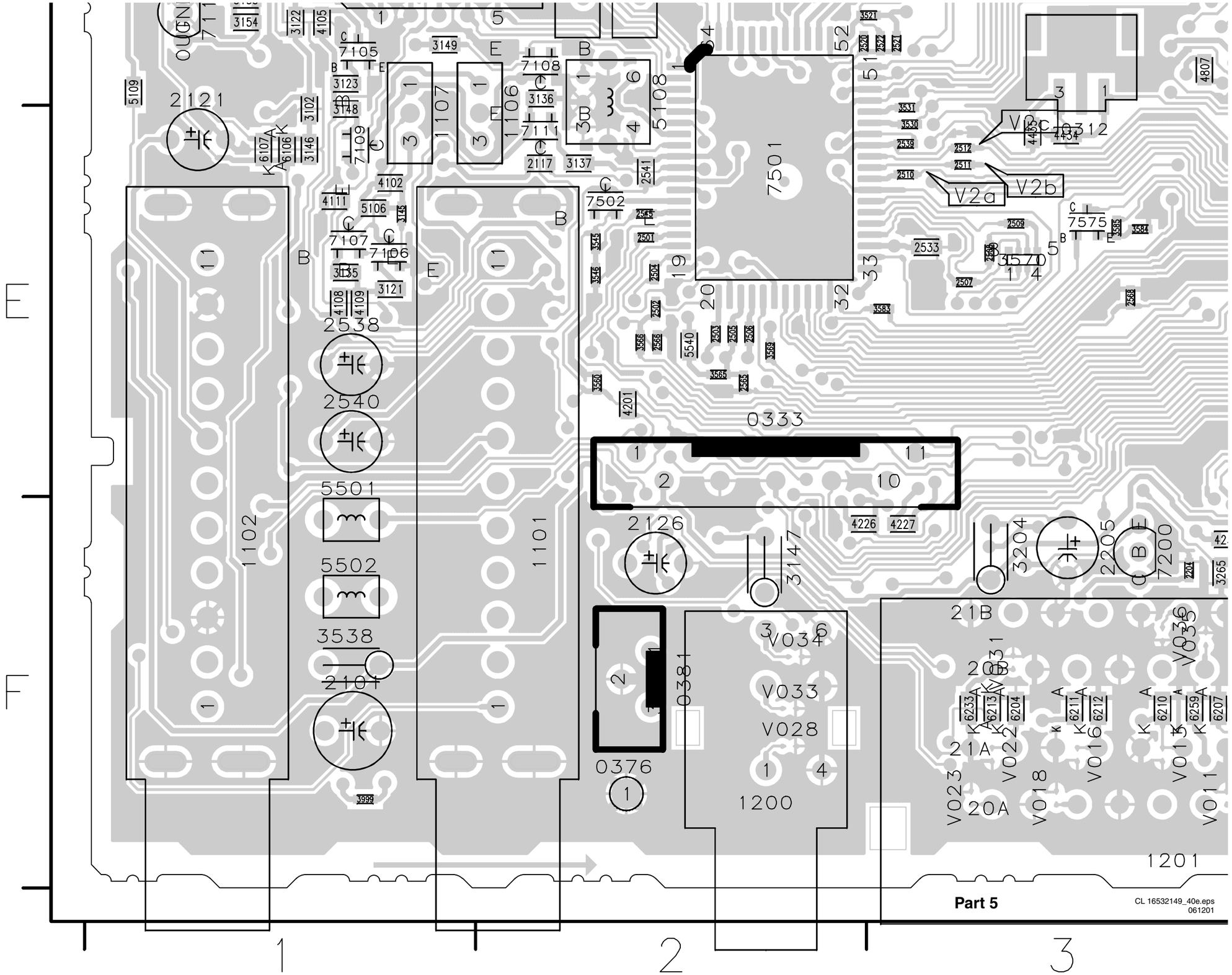

Layout Small Signal Board (Top View Part 6)

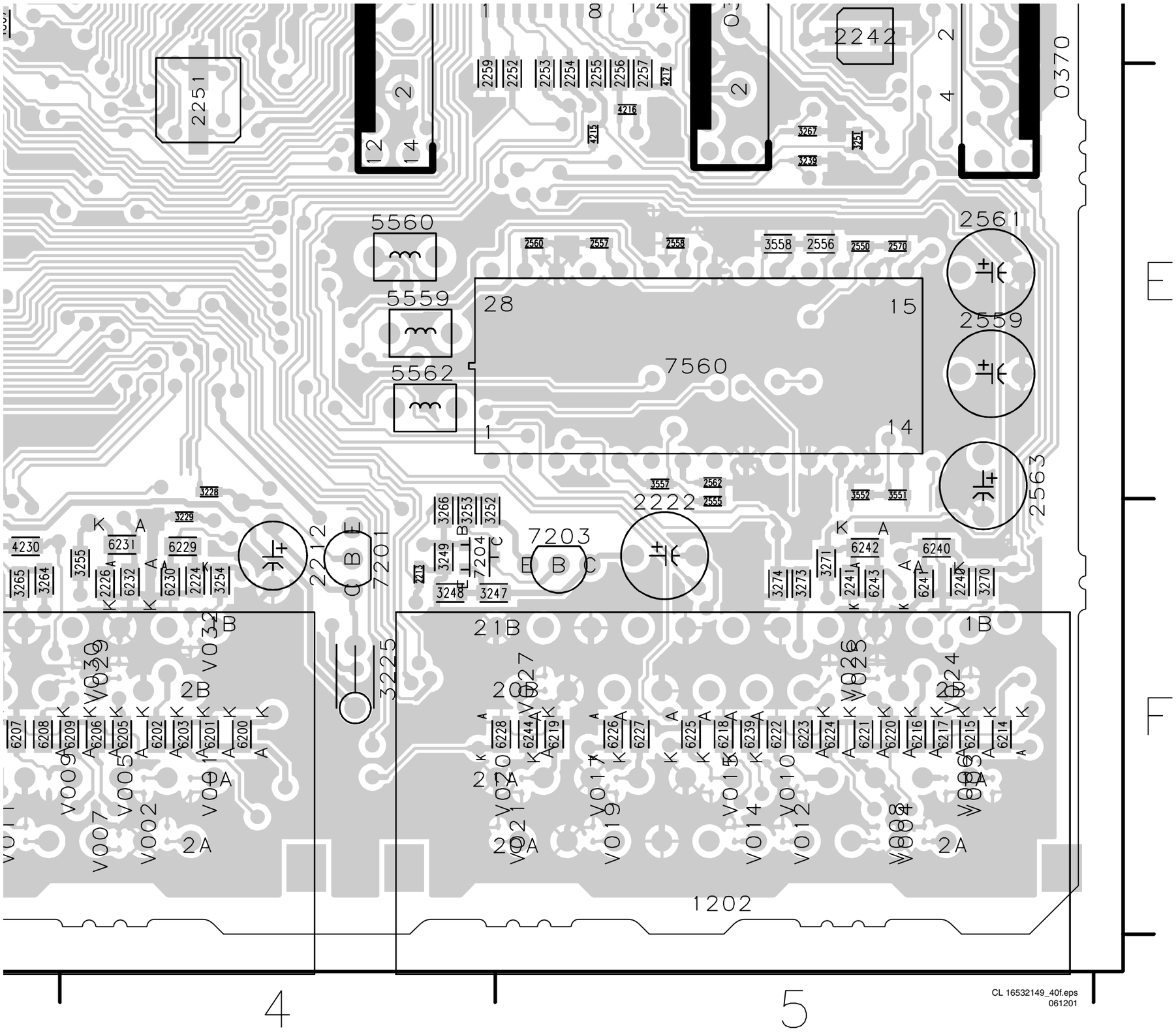

Layout Small Signal Board (Bottom Overview)

2102 E5	2787 D5	3244 F1	4103 D4	7752 C3
2104 E5	2788 A2	3245 F1	4104 E5	7758 C3
2105 E5	2793 B3	3246 F1	4107 E5	7775 B3
2106 D5	2797 C3	3250 F2	4110 E5	7776 C2
2107 D5	2798 C3	3256 F3	4113 D4	
2108 D5	2799 C3	3257 F4	4114 D5	
2111 E4	2800 C3	3258 F4	4203 D2	
2112 C5	2809 C4	3272 F4	4228 E4	
2118 D4	2812 C5	3280 F4	4229 F2	
2120 E5	2814 B5	3306 A1	4235 F2	
2122 D4	2821 B5	3323 A1	4316 A1	
2125 F5	2823 B5	3343 A1	4400 D1	
2127 E5	2825 B5	3413 A1	4401 D1	
2202 F2	2828 B5	3414 A1	4402 D1	
2203 F2	2830 C5	3421 A3	4403 D1	
2206 F2	2835 C5	3422 A1	4411 D2	
2209 F3	2836 C5	3438 A1	4412 D2	
2210 F3	2843 D2	3439 A1	4420 A1	
2215 F1	2861 C2	3440 A1	4425 A3	
2216 F1	2862 B2	3441 A1	4614 C2	
2217 F1	2863 C2	3442 A2	4616 C2	
2218 E4	2865 B2	3443 A2	4618 C2	
2219 F1	2867 C2	3444 A1	4700 B4	
2220 F1	2868 B2	3451 A2	4701 B4	
2221 F2	2880 C2	3452 A2	4732 C2	
2228 F4	2890 B4	3454 A1	4733 B2	
2229 F4	2891 B4	3532 D4	4734 C2	
2235 F4	2892 C4	3553 E1	4735 B2	
2302 A1	2898 B4	3554 E1	4736 C2	
2305 A1	3103 F5	3556 E1	4745 E1	
2306 A2	3104 F5	3567 E4	4803 E4	
2313 A1	3106 D5	3568 E4	4804 E4	
2343 A1	3118 E4	3571 E4	4805 C4	
2400 A1	3119 E5	3590 E1	4806 C4	
2401 A1	3133 E5	3769 C3	4809 E1	
2402 A1	3134 D5	3770 C3	4812 C3	
2403 A1	3138 E5	3771 C3	4813 C3	
2404 A1	3139 E5	3772 C3	5102 E5	
2405 A1	3152 E4	3773 C3	5105 E5	
2419 A2	3153 D4	3776 C3	5300 A2	
2427 A1	3200 F2	3777 C3	5301 A2	
2441 A2	3201 F2	3778 C3	5302 A2	
2442 A2	3202 F2	3779 C3	5553 E1	
2532 E4	3203 F2	3783 C4	5754 C5	
2534 D4	3205 F3	3796 B3	5755 C5	
2535 E3	3206 F3	3797 B3	5757 B2	
2536 E4	3207 F3	3817 C5	5758 B5	
2537 E3	3208 F2	3823 B3	6002 A3	
2551 E1	3209 F3	3824 B3	6003 A3	
2552 E1	3210 F3	3826 F4	6008 A3	
2553 E1	3211 F3	3830 B3	6025 A3	
2554 E1	3212 F2	3831 B3	6101 E5	
2564 E1	3213 F3	3832 B4	6105 D5	
2567 E1	3215 F3	3862 B2	6234 F3	
2569 A2	3216 F3	3863 C2	6235 F3	
2752 C4	3218 F3	3864 B2	6236 F4	
2754 C5	3219 F3	3865 C2	6237 F4	
2755 C4	3220 F2	3868 B2	6260 F4	
2756 C4	3221 F1	3869 C2	6261 F4	
2757 C4	3222 F1	3870 B2	6300 A2	
2758 C4	3223 F1	3871 C2	6431 A1	
2759 C4	3224 F1	3872 B2	6432 A2	
2760 C4	3227 F2	3883 D2	6750 D1	
2763 C4	3230 F1	3884 D2	6754 B4	
2764 C4	3231 F2	3885 D2	7101 D5	
2767 C4	3232 F1	3886 D2	7112 D4	
2768 C4	3233 F4	3887 D2	7403 A1	
2773 C4	3235 F1	3888 D2	7425 A1	
2774 B4	3236 F1	3892 B3	7430 A2	
2779 C4	3240 F1	3893 B3	7431 A2	
2781 C4	3241 F1	4001 B3	7555 E1	
2785 B4	3242 F1	4002 B3	7561 E4	
2786 B4	3243 F1	4020 A3	7701 D2	

Layout Small Signal Board (Bottom View Part 1)

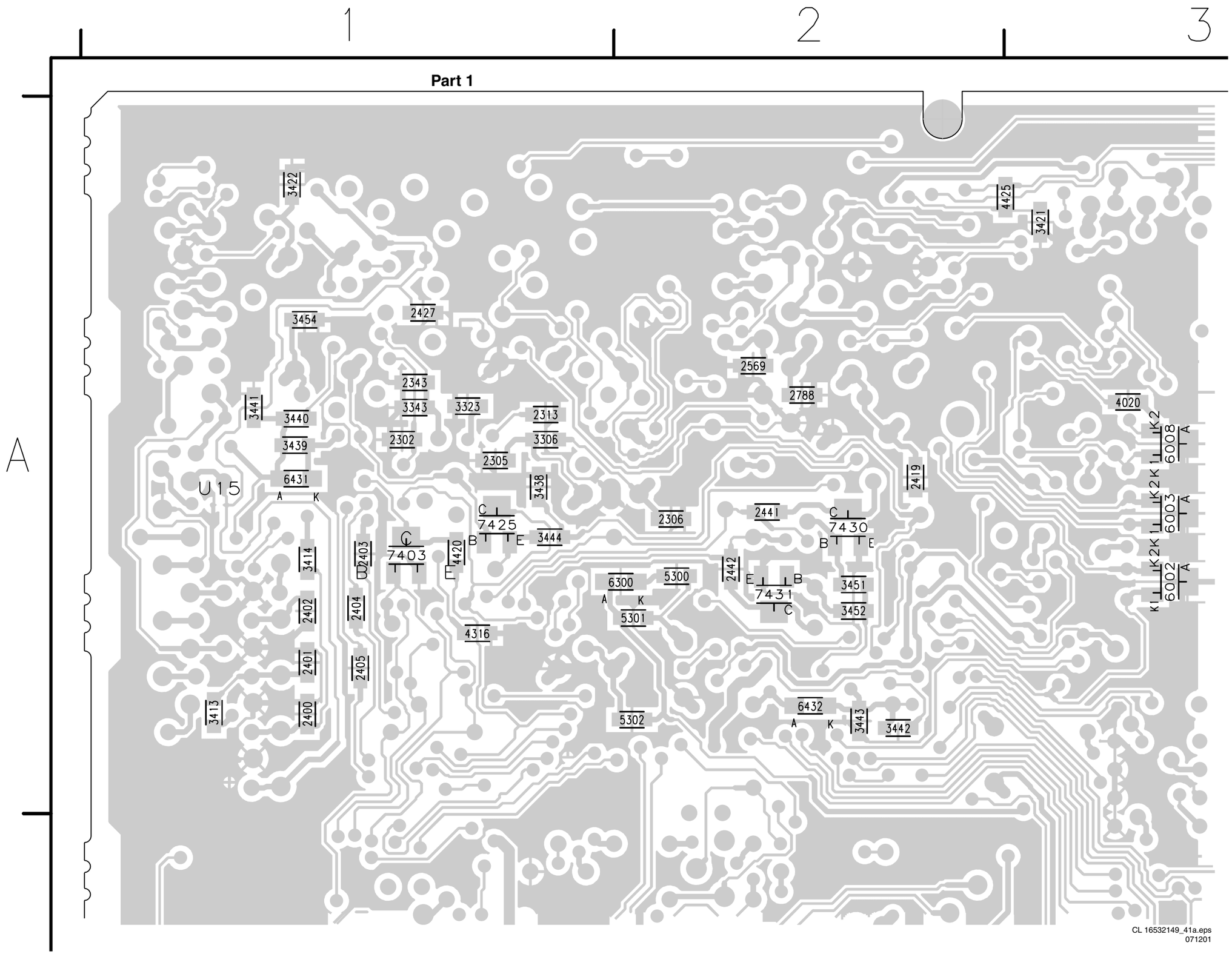

Layout Small Signal Board (Bottom View Part 2)

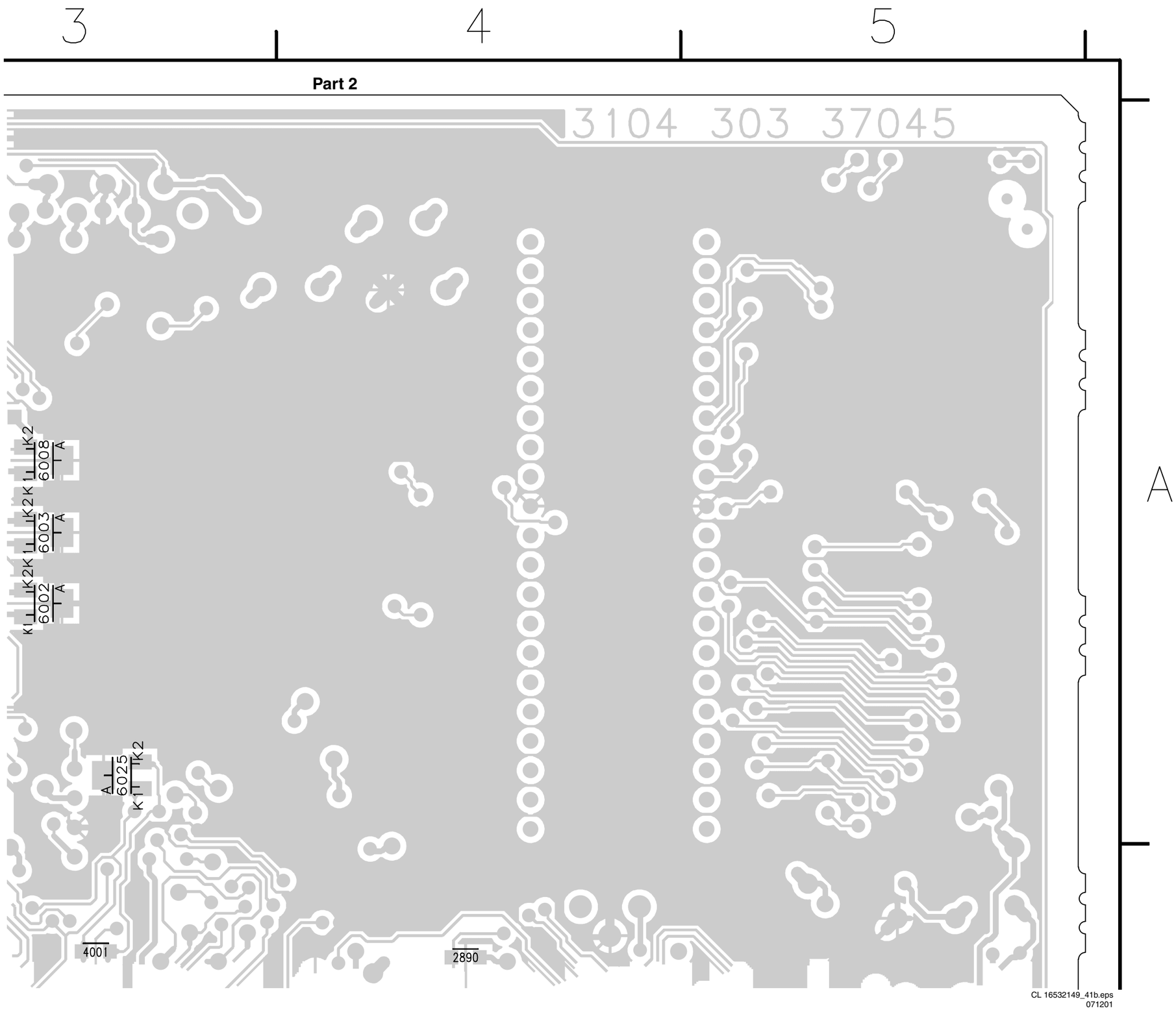

Layout Small Signal Board (Bottom View Part 3)

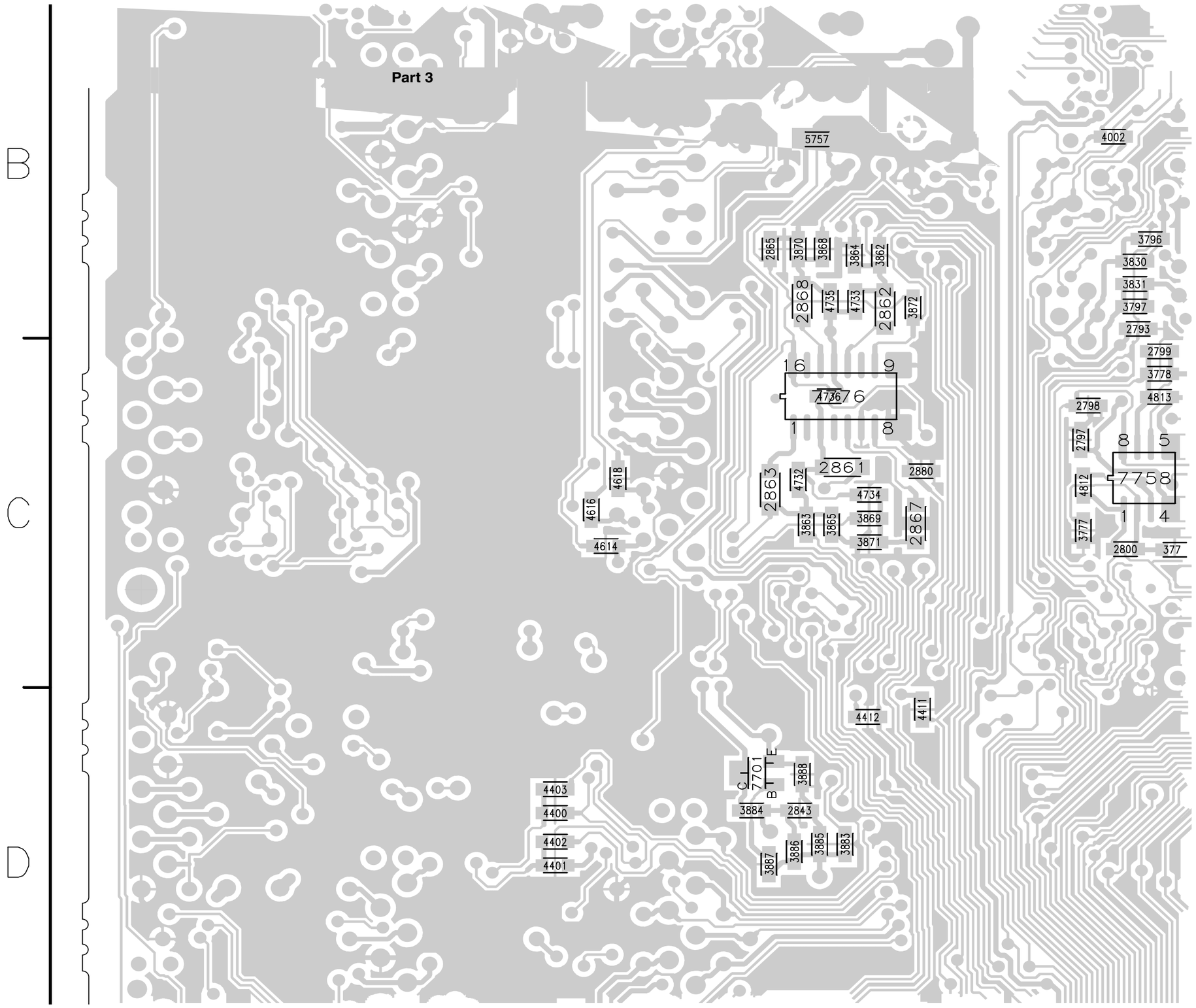

CL 16532149_41c.eps
201201

Layout Small Signal Board (Bottom View Part 4)

Layout Small Signal Board (Bottom View Part 5)

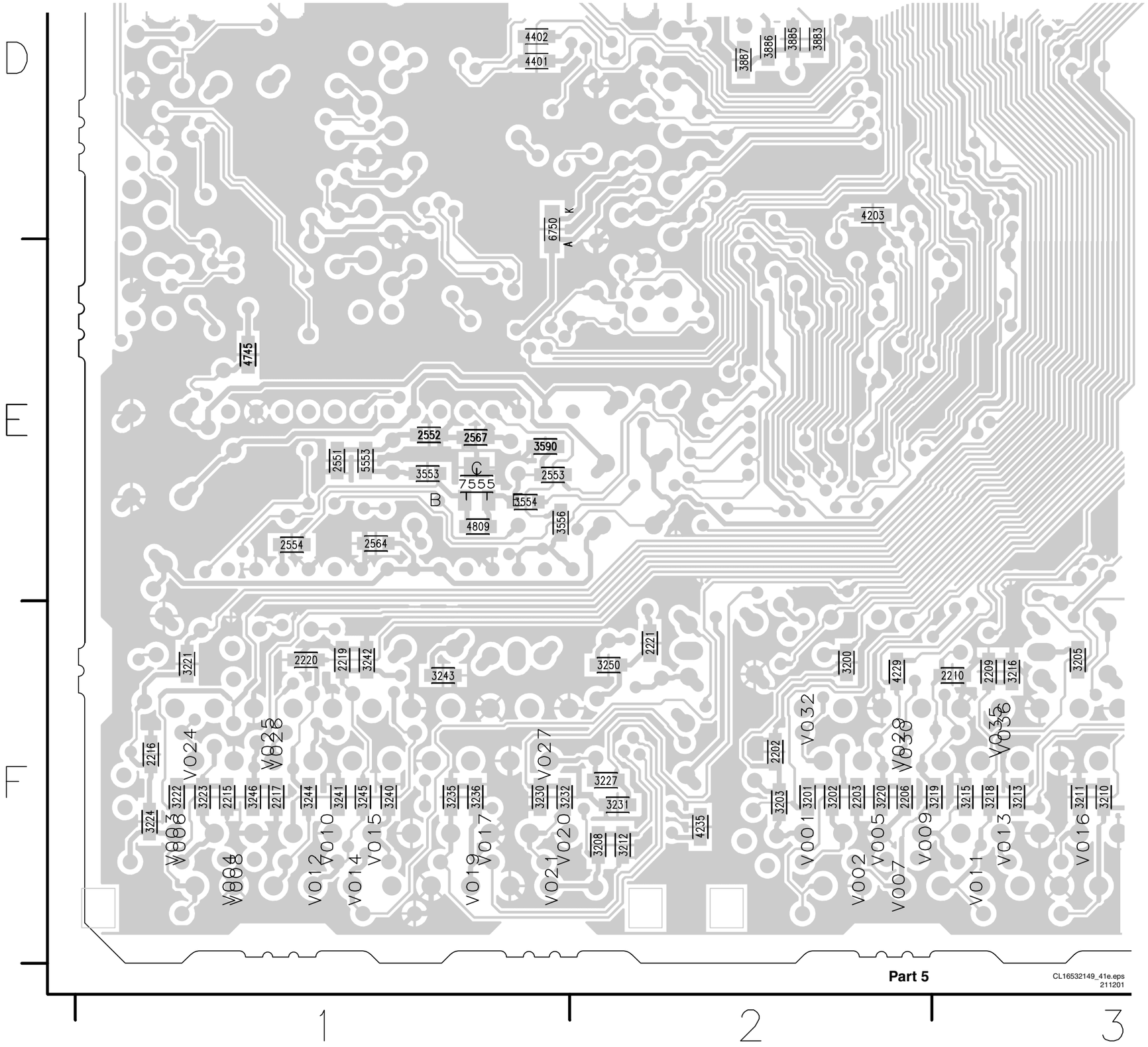

Layout Small Signal Board (Bottom View Part 6)

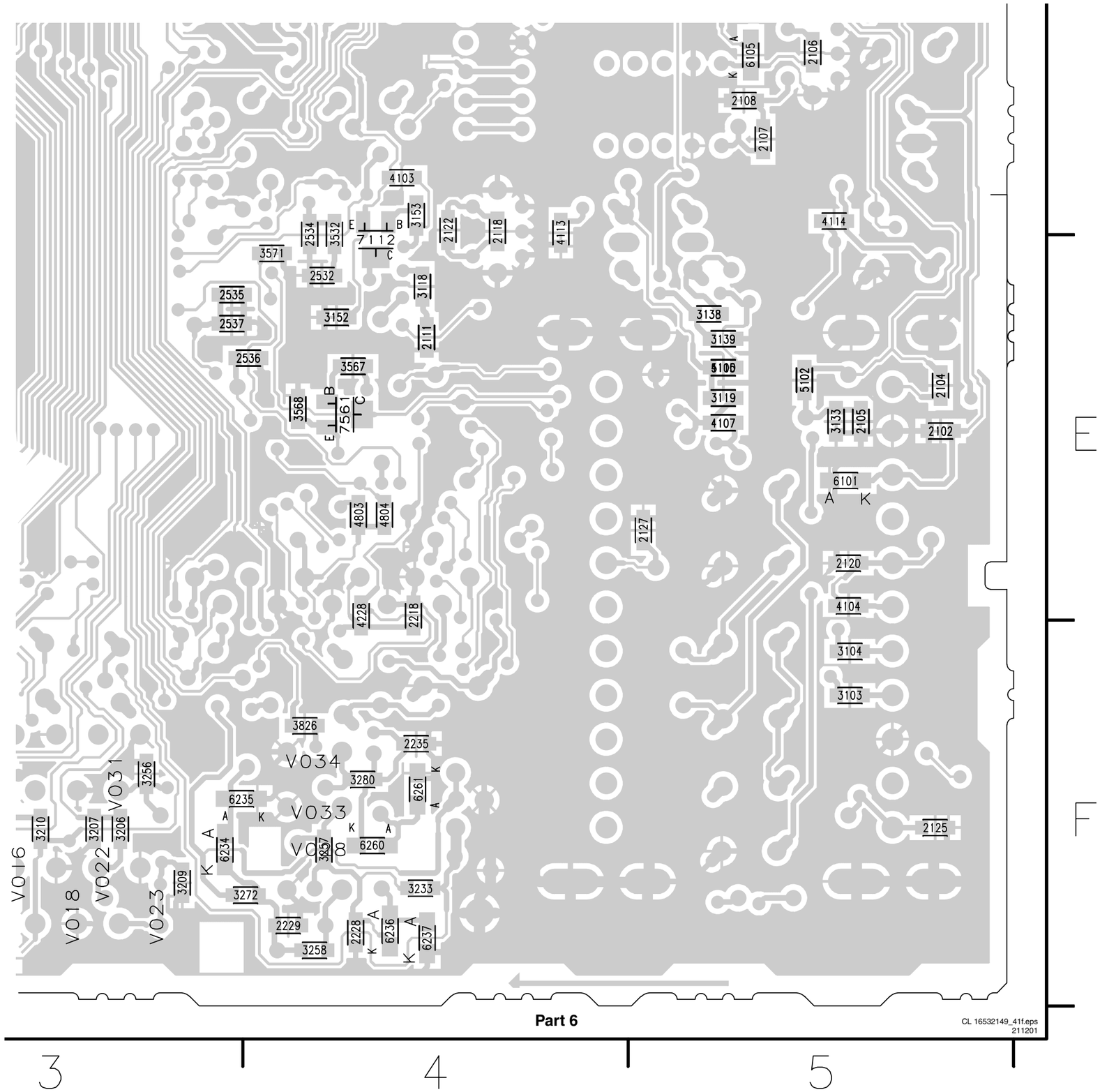

Feature Box 7 Panel: Feature Box

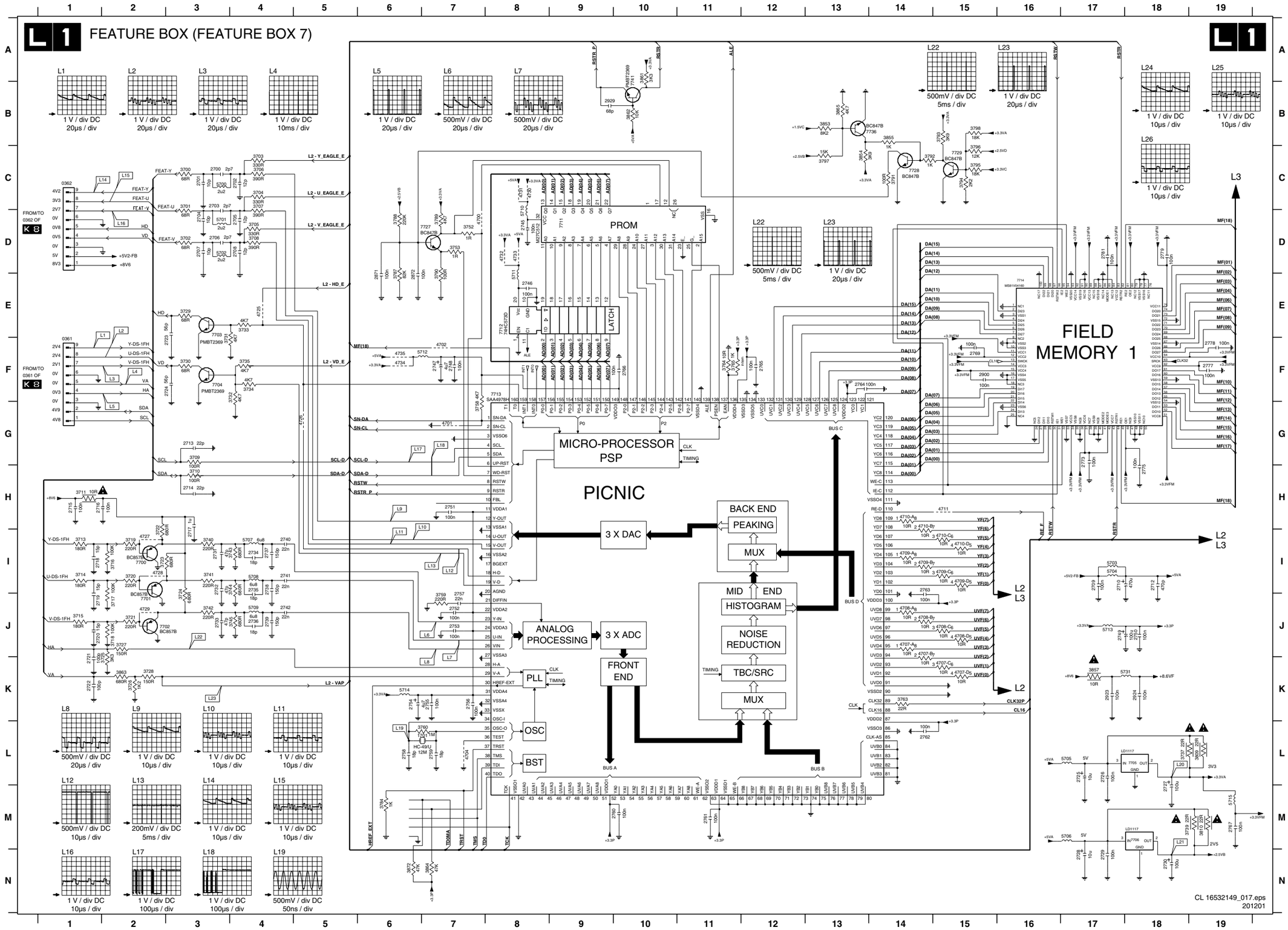

Feature Box 7 Panel: Eagle

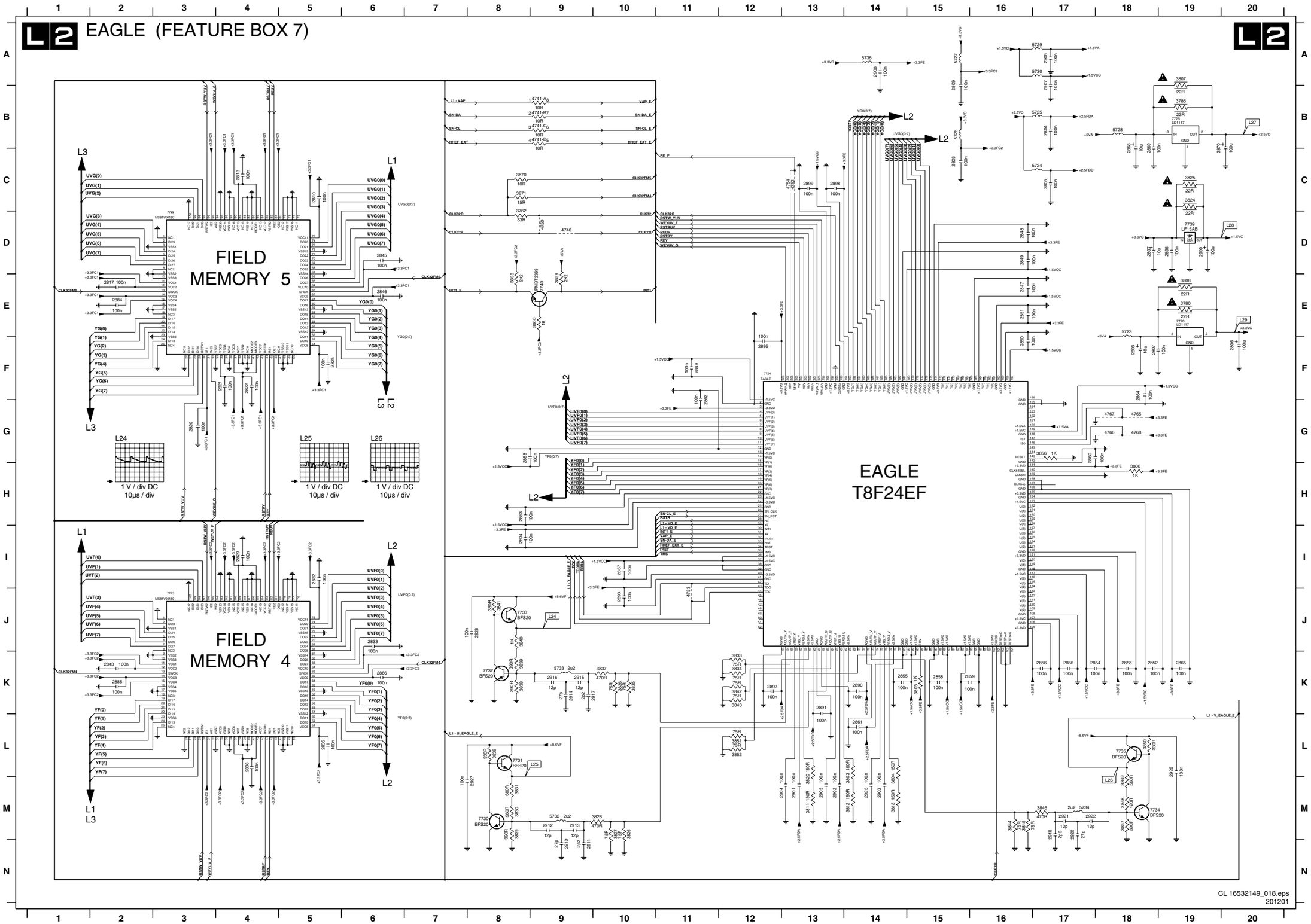

2804 B17
2805 C17
2806 F20
2807 F18
2808 F18
2809 A15
2810 C5
2813 C4
2817 E2
2820 G3
2821 F4
2822 F4
2825 F5
2826 C15
2829 I4
2832 I5
2833 J6
2835 L5
2838 L4
2843 K2
2845 D6
2846 E6
2847 E16
2848 D16
2849 D16
2850 F16
2851 E16
2852 K18
2853 K18
2854 K17
2855 K14
2856 K17
2858 K15
2859 K15
2860 G17
2861 L14
2862 F11
2863 H8
2864 F18
2865 K19
2866 K17
2867 I10
2868 B18
2869 B18
2870 B19
2884 E2
2885 K2
2886 K6
2888 G8
2889 F11
2890 K14
2891 K13
2892 K12
2893 J10
2894 I8
2895 F12
2896 D19
2897 D18
2898 C13
2899 C13
2901 M13
2902 M13
2903 M14
2904 M13
2905 M13
2906 A17
2907 A17
2908 A14
2909 D19
2910 N9
2911 N9
2912 M9
2913 M9
2914 K9
2915 K9
2916 K9
2917 K9
2918 M17
2920 M17
2921 M17
2922 M17
2925 M14
2926 L19
2927 M8
2928 J8
3762 D8
3780 E19
3786 B19
3803 M14
3804 M14
3805 K15
3806 H18
3807 A19
3808 E19
3811 M13
3812 M14
3813 M14
3820 M13
3824 C19
3825 C19
3826 M10
3827 M10
3828 M10
3829 M8
3830 M8
3831 M8
3832 L8
3833 K12
3834 K12
3835 K10
3836 K10
3837 K10
3838 K8
3839 K8
3840 J8
3841 J8
3842 K12
3843 K12
3844 M16
3845 M16
3846 M17
3847 M18
3848 M18
3849 M18
3850 L18
3851 L12
3852 L12
3856 G17
3858 E8
3859 E9
3860 E9
3870 C8
3871 C8
4740 D9
4741-A B9
4741-B B9
4741-C B9
4741-D B9
4750 D9
4752 C13
4753 J11
4754 C13
4765 G18
4766 G18
4767 G18
4768 G18
5723 E18
5724 C17
5725 B17
5726 B15
5727 A15
5728 B18
5729 A17
5730 A17
5732 M9
5733 K9
5734 M17
5736 A14
7720 E19
7722 D3
7723 J3
7724 F12
7725 B19
7730 M8
7731 L8
7732 K8
7733 J8
7734 M18
7735 L18
7739 D19
7740 E9

Feature Box 7 Panel: Falconic

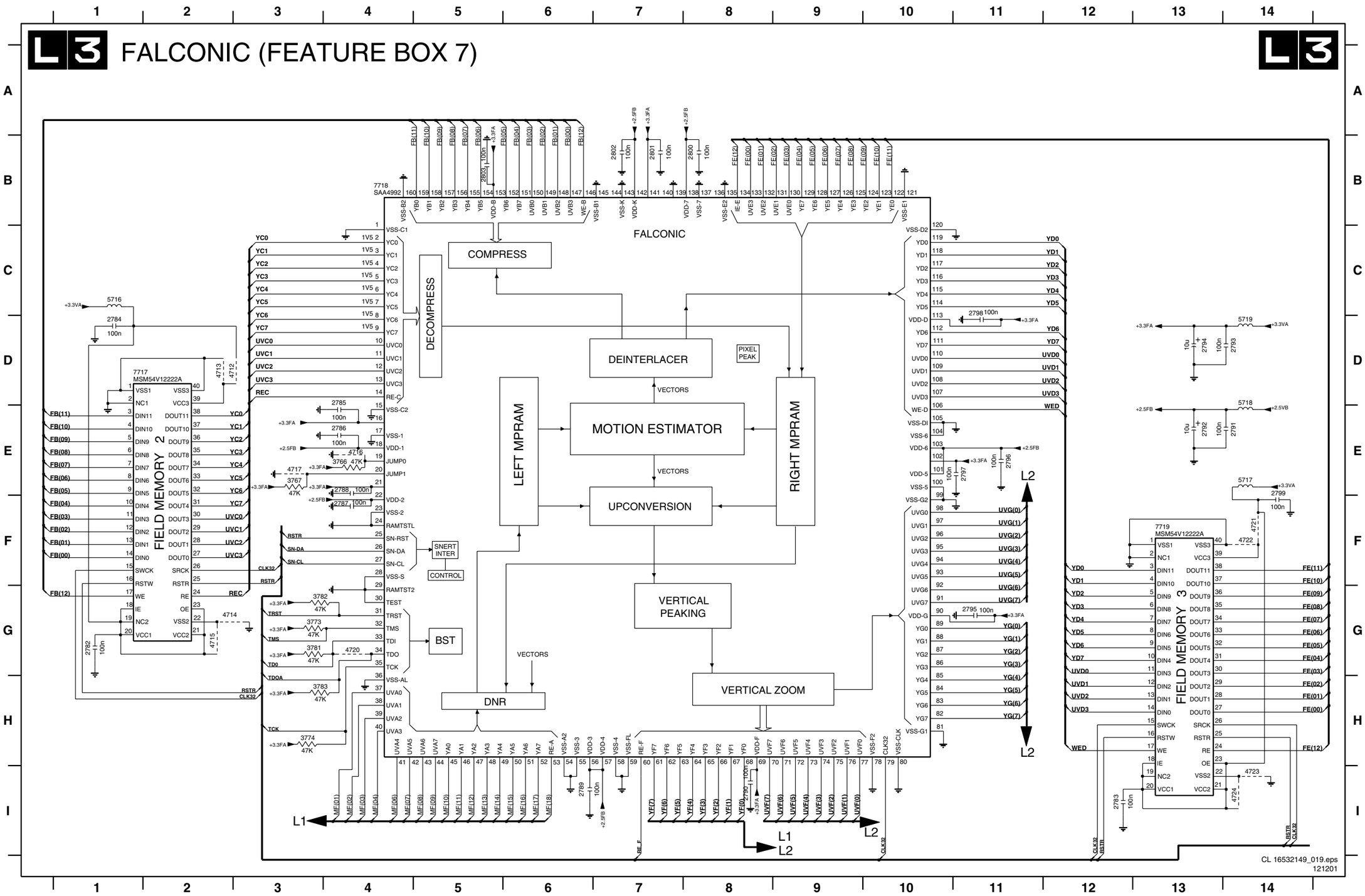

2782 G1
2783 I12
2784 D1
2785 D4
2786 E4
2787 F4
2788 E4
2789 I6
2790 I8
2791 E14
2792 E13
2793 D14
2794 D13
2795 G11
2796 E11
2797 E11
2798 C11
2799 E14
2800 B8
2801 B7
2802 B7
2803 B5
3766 E4
3767 E3
3773 G3
3774 H3
3781 G3
3782 G3
3783 H3
4712 D3
4713 D2
4714 G2
4715 G2
4716 E4
4717 E3
4720 G4
4721 F14
4722 F14
4723 I14
4724 I14
5716 C1
5717 E14
5718 D14
5719 D14
7717 D1
7718 B4
7719 F13

Layout Feature Box 7 Panel (Top View)

0361 C4	2705 C2	2714 C4	2724 C2	2734 C3	2748 C2	2760 B3	2773 B2	2792 A4	2808 A5	2825 B5	2849 B5	2860 B5	2871 C1	2893 C4	2908 B4	2916 C4	2926 C5	3705 C2	3715 C3	3728 C4	3737 A1	4724
0362 C2	2706 C2	2715 C2	2725 A1	2736 C3	2749 C1	2761 B3	2775 B3	2794 A3	2809 A5	2826 B4	2850 B5	2861 C5	2872 C1	2894 B4	2909 A5	2917 C4	2927 C5	3706 C2	3716 C3	3729 C2	3739 A1	4726
1701 C3	2707 C2	2716 C4	2726 A1	2737 C3	2750 C1	2762 B3	2783 A5	2796 A4	2810 A5	2829 B4	2851 B5	2864 B5	2884 A4	2895 B4	2910 C5	2918 C5	2928 C4	3707 C2	3718 C3	3730 C2	3740 C3	4727
2700 C2	2708 C2	2717 C4	2727 A2	2739 C3	2751 C2	2763 B2	2785 A3	2800 A3	2813 A4	2832 B4	2852 B5	2865 B5	2885 B4	2897 A5	2911 C5	2920 C5	3700 C2	3708 C2	3719 C3	3731 C2	3742 C3	4729
2701 C2	2709 B1	2718 C3	2728 A1	2740 C2	2752 C2	2764 B2	2786 A3	2802 A3	2817 A4	2835 B3	2855 C5	2866 C5	2889 B4	2899 B4	2912 C5	2921 C5	3701 C2	3709 C5	3721 C3	3732 C2	3743 C3	4730
2702 C2	2710 B1	2720 C3	2730 B1	2742 C3	2753 C3	2765 B2	2787 A3	2805 C4	2820 B4	2838 B3	2856 C5	2867 C4	2890 C5	2900 A2	2913 C5	2922 C5	3702 C2	3710 C4	3722 C4	3733 C2	3745 C3	4731
2703 C2	2712 B1	2722 C4	2731 C3	2745 B1	2754 B3	2767 A2	2788 A3	2806 A5	2821 B4	2843 B4	2858 C5	2868 C4	2891 C4	2906 B5	2914 C4	2923 C5	3703 C2	3711 C4	3723 C4	3734 C2	3752 C1	4732
2704 C2	2713 C5	2723 C2	2733 C3	2747 C2	2756 C3	2769 A2	2790 B4	2807 A5	2822 B4	2847 B5	2859 C5	2870 C4	2892 C4	2907 B5	2915 C4	2924 C5	3704 C2	3713 C3	3726 C4	3735 C2	3753 C2	4733
																					3758 C2	4734
																					3764 B2	4735
																					3767 A3	4741
																					3774 A3	4752
																					3780 A5	4753
																					3782 A3	4754
																					3783 A3	4765
																					3786 B4	4766
																					3787 C1	4767
																					3788 C1	4768
																					3789 C1	5700
																					3790 C1	5701
																					3791 C1	5702
																					3792 C1	5703
																					3793 C1	5704
																					3794 C1	5705
																					3795 C1	5706
																					3796 C1	5707
																					3797 C1	5709
																					3798 C1	5710
																					3806 B5	5712
																					3807 B4	5713
																					3808 A5	5714
																					3809 A1	5715
																					3810 A1	5716
																					3824 A5	5717
																					3825 A5	5718
																					3829 C5	5723
																					3830 C5	5726
																					3831 C5	5727
																					3832 C5	5728
																					3833 C4	5729
																					3834 C4	5730
																					3835 C4	5732
																					3836 C4	5733
																					3837 C4	5734
																					3838 C4	5736
																					3839 C4	7700
																					3840 C4	7702
																					3841 C4	7703
																					3844 C5	7704
																					3845 C5	7705
																					3846 C5	7706
																					3847 C5	7711
																					3848 C5	7713
																					3849 C5	7714
																					3850 C5	7717
																					3853 C1	7718
																					3854 C1	7719
																					3855 C1	7720
																					3857 B5	7722
																					3858 B3	7723
																					3859 B3	7724
																					3860 B3	7725
																					3863 C4	7727
																					3865 C1	7728
																					3999 B1	7729
																					4700 C1	7730
																					4701 C2	7731
																					4707 B3	7732
																					4708 B3	7733
																					4709 B3	7734
																					4710 B3	7735
																					4711 B2	7736
																					4715 A2	7739
																					4717 A3	7740
																					4723 A5	

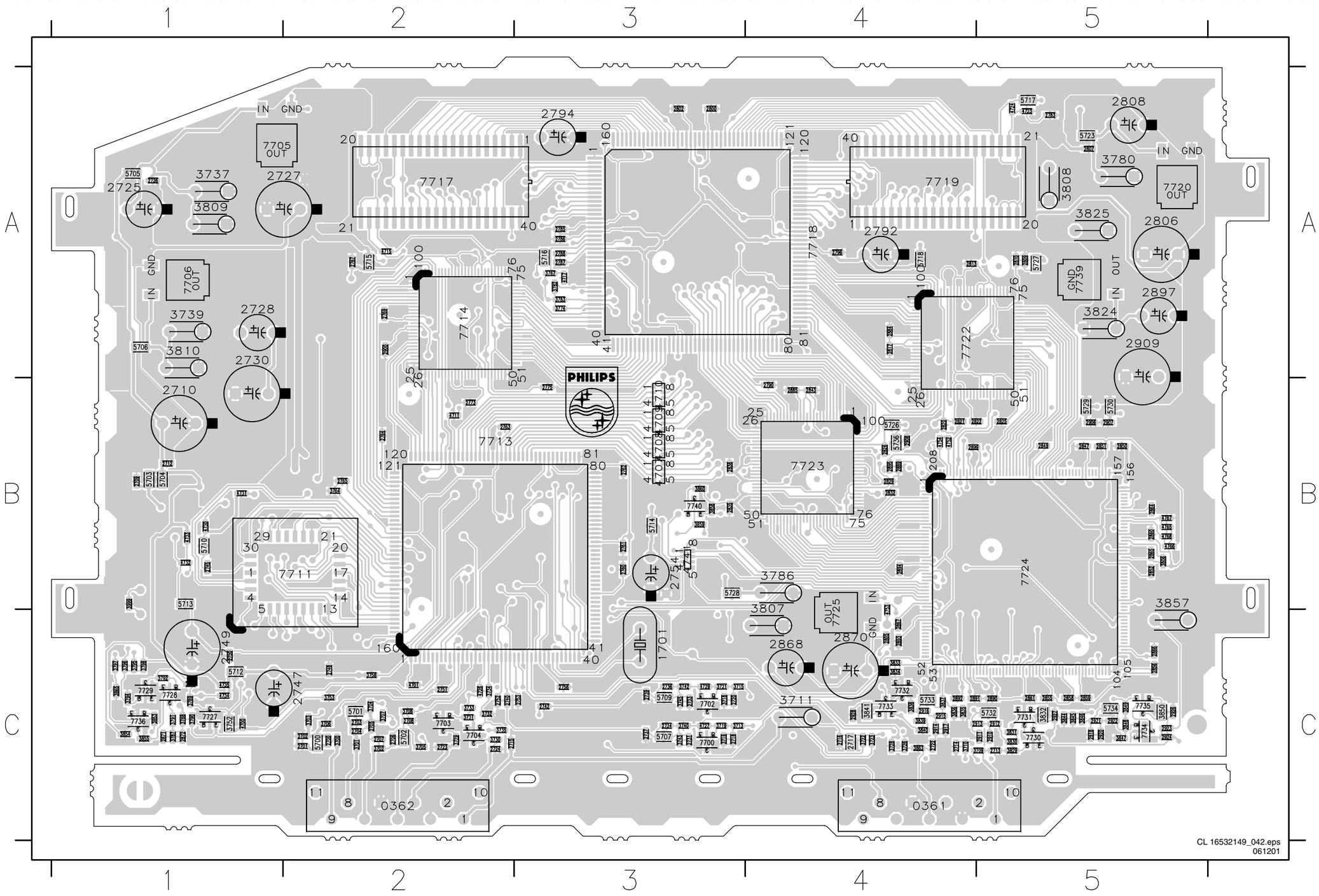

Layout Feature Box 7 Panel (Bottom View)

2719 C3
2721 C2
2729 A5
2732 C3
2735 C4
2738 C4
2741 C4
2746 B5
2755 B3
2757 C4
2758 C3
2759 C3
2766 B4
2777 A4
2778 A4
2779 A4
2781 A4
2782 A4
2784 A4
2789 A3
2791 A2
2793 A4
2795 A3
2797 A3
2798 A3
2799 A2
2801 A3
2803 A3
2804 C2
2833 B3
2845 A2
2846 A2
2848 B1
2853 B1
2854 C1
2862 B2
2863 B2
2869 C3
2886 B2
2888 B2
2896 A1
2898 B2
2901 C2
2902 C2
2903 C2
2904 C2
2905 C2
2925 C2
2929 B4
3714 C3
3717 C3
3720 C3
3724 C3
3725 C2
3727 C2
3741 C3
3744 C3
3759 C4
3760 C3
3762 B2
3763 B3
3765 B4
3766 A4
3773 A4
3781 A4
3784 C4
3803 C2
3804 C2
3805 C1
3811 C2
3812 C2
3813 B2
3820 C2
3826 C2
3827 C2
3828 C2
3842 C2
3843 B2
3851 B2
3852 C2
3856 B1
3861 B4
3862 B4
3864 B3
3870 B2
3871 B2
3872 B3
4702 C4
4704 C4
4712 A4
4713 A4
4714 A4
4716 A4
4720 A3
4721 A2
4722 A2
4725 C4
4728 C3
4740 B3
4750 B3
5708 C4
5711 B5
5719 A3
5724 C2
5725 C2
5731 C1
7701 C3
7712 C5
7741 B4

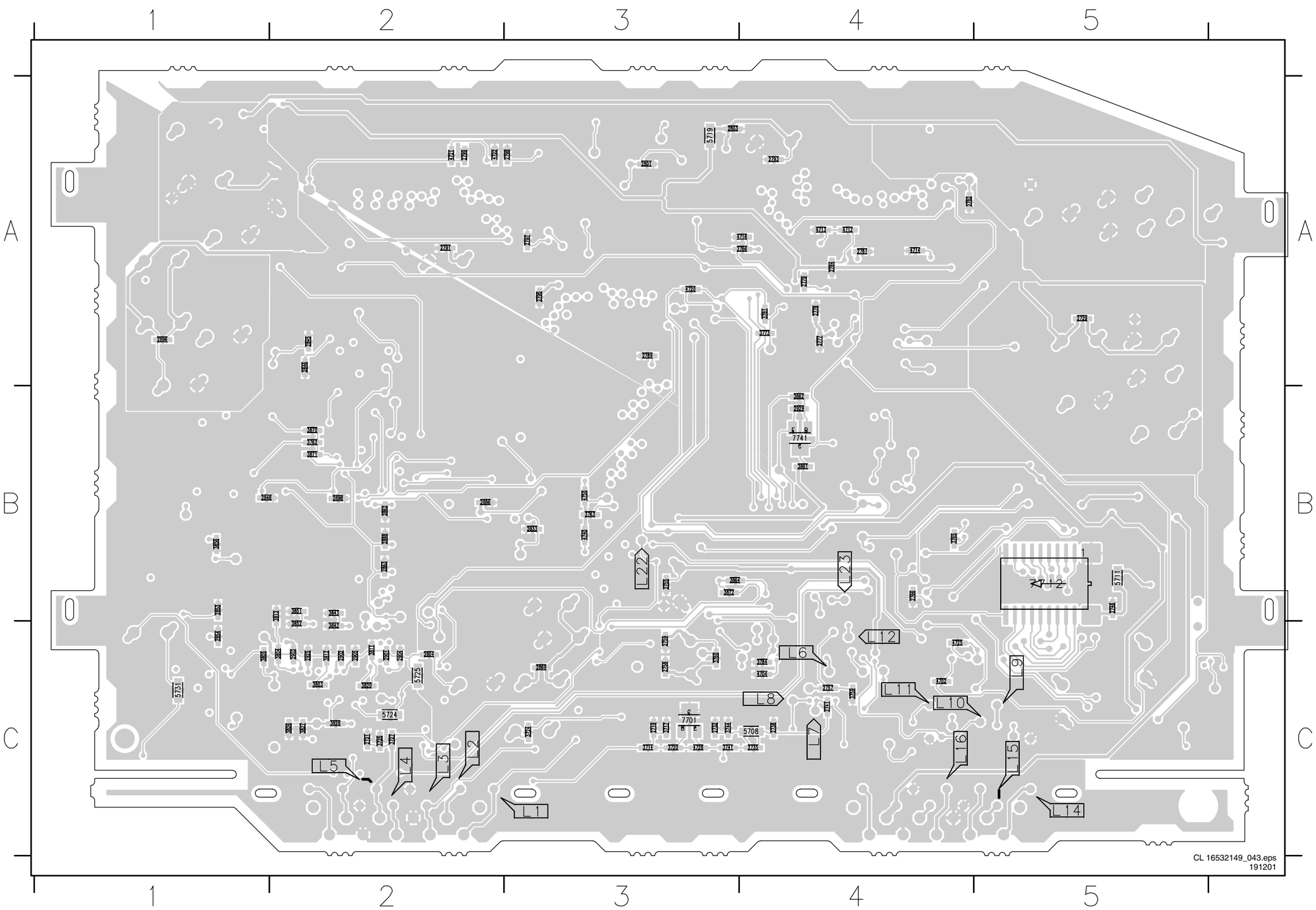

FDS Module: Tuner and IF (Full Dual Screen)

0351 D2	1109 C5	2104 C2	2111 C8	2122 B8	2506 F10	2520 F12	2532 B13	2541 A8	3103 C1	3112 F4	3119 E7	3135 G7	3143 A10	3152 F10	3531 B11	4101 E3	4110 E7	5103 D3	6102 E3	7102 E5	7109 E7
1102 C2	1525 E13	2105 C3	2112 A10	2140 B10	2507 C12	2521 F12	2534 B12	2545 F9	3104 C1	3113 G4	3121 G7	3136 E7	3144 B8	3153 G10	3532 B12	4102 E7	4111 G8	5104 C4	6103 F3	7103 G4	7111 E7
1104 E6	1526 E13	2106 C4	2116 A1	2501 F9	2508 C13	2522 F13	2536 B10	2553 F11	3106 C3	3114 G5	3122 G6	3137 D8	3145 H8	3154 G11	3538 A8	4104 B2	4113 F7	5105 E7	6104 F3	7104 F4	7112 G10
1105 F6	1527 E13	2107 C4	2117 D8	2502 F9	2509 C12	2525 F13	2537 B10	2554 F11	3107 D5	3115 G5	3123 G6	3138 D8	3146 A3	3501 F9	3545 F8	4105 G5	4115 H12	5106 E7	6105 D5	7105 G6	7501 B9
1106 F7	1528 E14	2108 D4	2118 D7	2503 F10	2510 C12	2526 F13	2538 A8	3100 C1	3109 D3	3116 E4	3124 A5	3139 E8	3147 G7	3504 G9	3546 F8	4106 B2	4116 A2	5108 D7	6106 A3	7106 G7	7502 E8
1107 F7	2101 B2	2109 C8	2119 A9	2504 F9	2511 C13	2527 F13	2539 A7	3101 C1	3110 E4	3117 E4	3133 C3	3140 A4	3148 D7	3521 E12	3550 A12	4108 H7	5101 B2	5501 A8	6107 A3	7107 G7	7991 F12
1108 D5	2102 B3	2110 C8	2120 B1	2505 F10	2512 C12	2528 F14	2540 B8	3102 A4	3111 F4	3118 C8	3134 D5	3142 A10	3151 A2	3530 A11	3880 G12	4109 H7	5102 C3	5502 A8	7101 D5	7108 F6	c001 F1

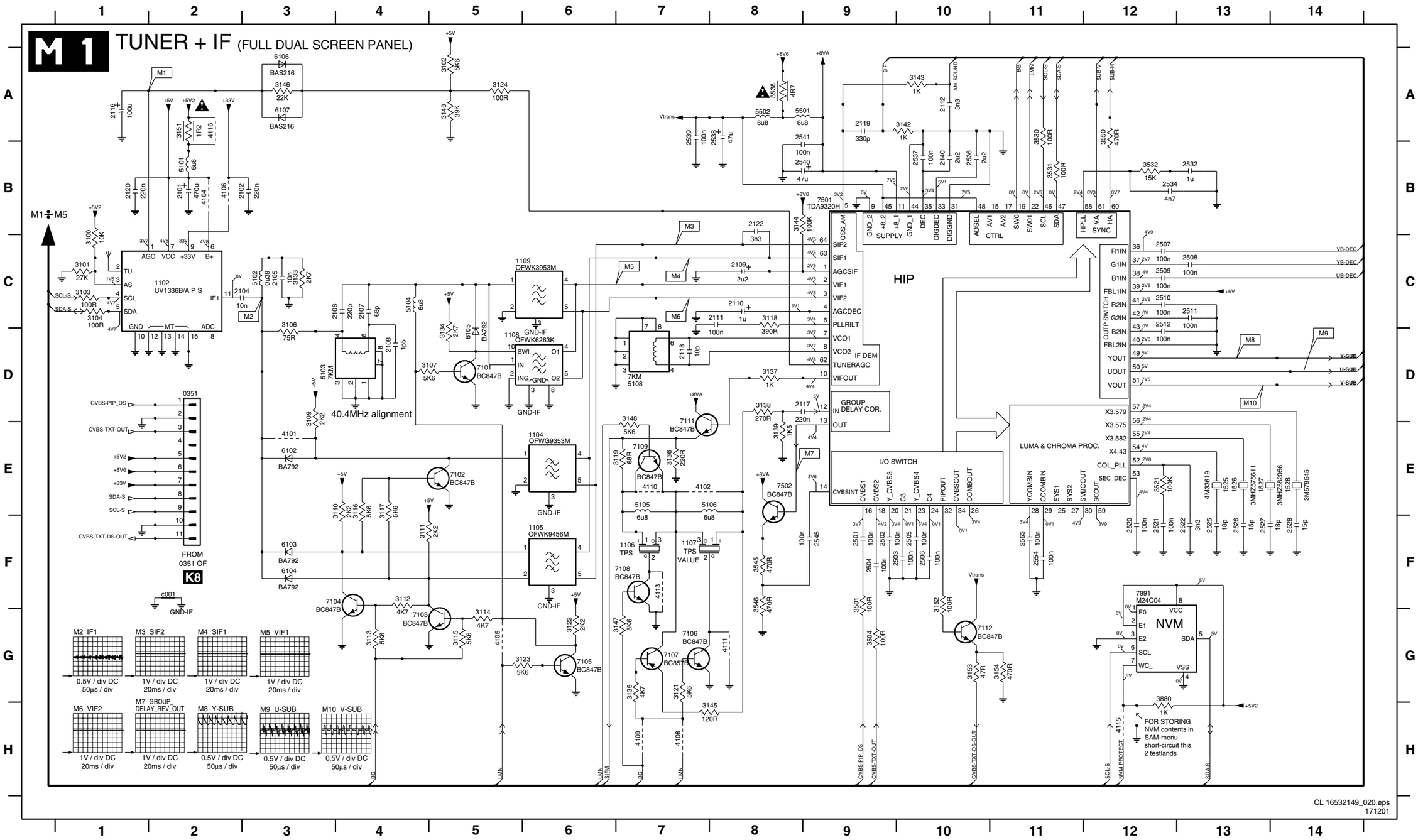

FDS Module: Selector Switches

0352 B3	2800 D6	2803 C6	2807 E10	2860 F12	2882 G2	2890 H2	3841 F4	3844 H12	3847 E4	4843 H8	5880 F1	6850 H12	6883 C11	7821 E6	7845 E4	7860 E12
0353 D3	2801 C6	2804 C6	2840 F8	2880 H4	2883 G1	2891 G2	3842 C4	3845 G12	3999 B2	4844 G8	5881 I2	6880 G4	6884 C11	7840-B G8	7850 H13	7880 G3
1800 G2	2802 C6	2805 B6	2845 G12	2881 G4	2884 I2	3840 E4	3843 C4	3846 E3	4842 G8	4845 H8	5882 F3	6881 G4	6883 C11	7800 B7	7851 G13	7881 F3

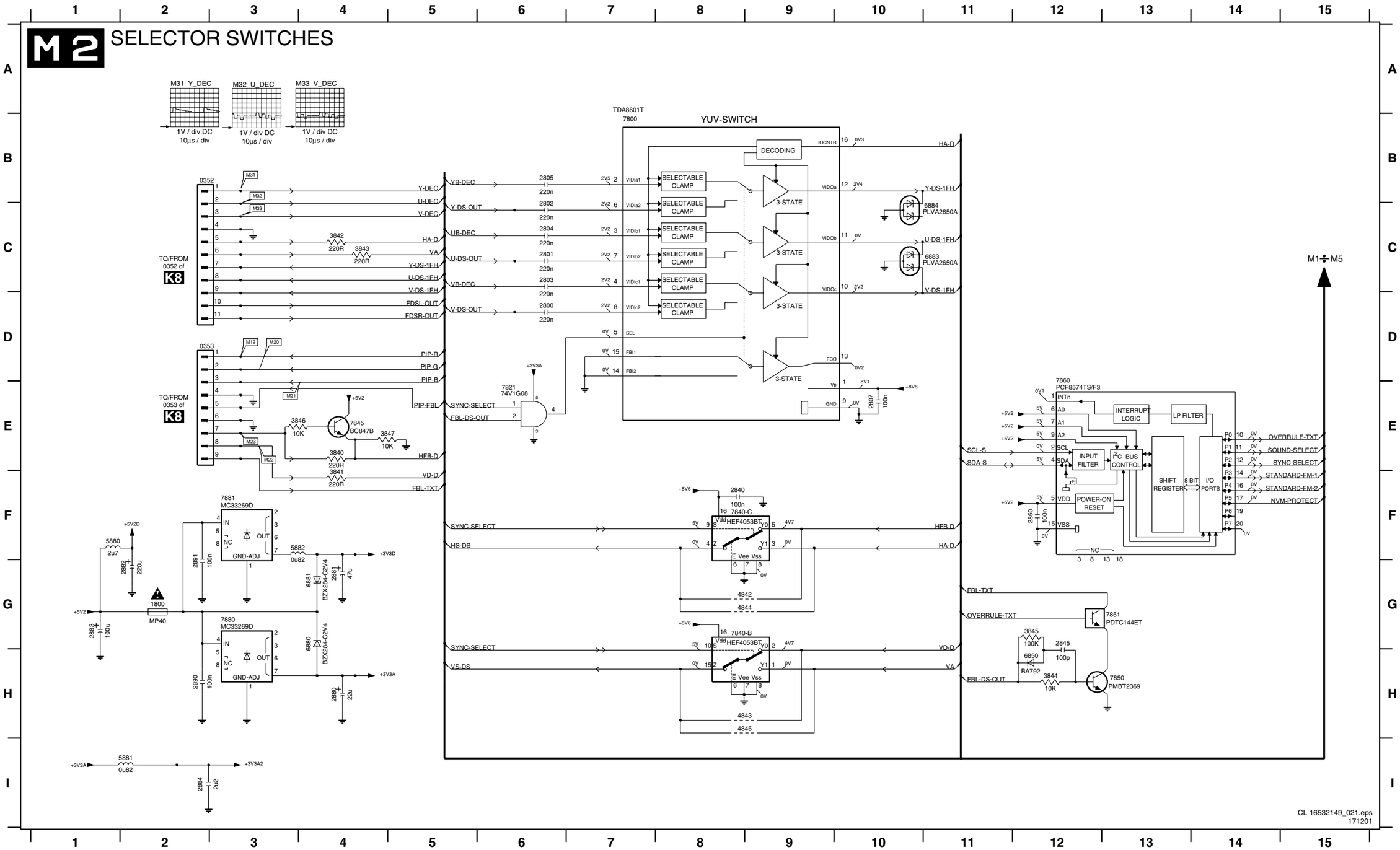

FDS Module: Filters and Buffers

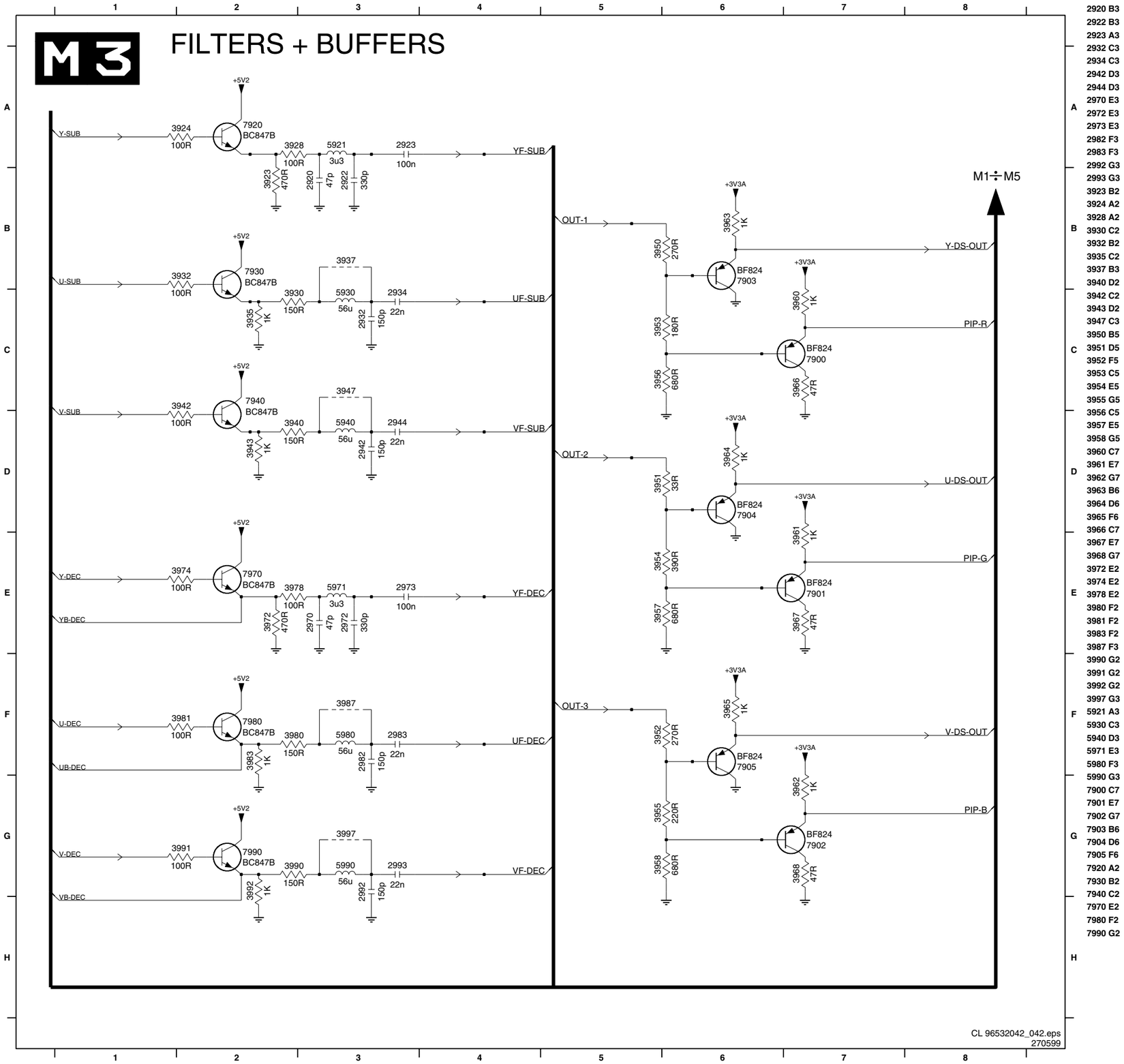

2920 B3
2922 B3
2923 A3
2932 C3
2934 C3
2942 D3
2944 D3
2970 E3
2972 E3
2973 E3
2982 F3
2983 F3
2992 G3
2993 G3
3923 B2
3924 A2
3928 A2
3930 C2
3932 B2
3935 C2
3937 B3
3940 D2
3942 C2
3943 D2
3947 C3
3950 B5
3951 D5
3952 F5
3953 C5
3954 E5
3955 G5
3956 C5
3957 E5
3958 G5
3960 C7
3961 E7
3962 G7
3963 B6
3964 D6
3965 F6
3966 C7
3967 E7
3968 G7
3972 E2
3974 E2
3978 E2
3980 F2
3981 F2
3983 F2
3987 F3
3990 G2
3991 G2
3992 G2
3997 G3
5921 A3
5930 C3
5940 D3
5971 E3
5980 F3
5990 G3
7900 C7
7901 E7
7902 G7
7903 B6
7904 D6
7905 F6
7920 A2
7930 B2
7940 C2
7970 E2
7980 F2
7990 G2

FDS Module: Dual Screen IC and Memory

2748 B2 2750 C9 2752 F9 2754 F9 2756 B2 2758 G5 2760 F2 2762 E3 2764 C11 2766 C1 2768 D3 2770 G4 2772 D9 2774 D9 2776 A12 2778 A13 2780 A11 2782 B2 2788 G2 2797 F1 3750 B2 3752 F5 3754 G10 3756 G5 4700 C2 6753 F11 7750 A11
2749 E2 2751 C9 2753 F9 2755 B1 2757 C2 2759 F2 2761 G4 2763 E2 2765 C2 2767 D2 2769 F3 2771 F8 2773 D9 2775 D9 2777 A13 2779 A13 2781 A11 2787 F2 2789 C1 2798 G11 3751 F2 3753 G10 3755 F11 3757 G5 5752 E1 7700 A3

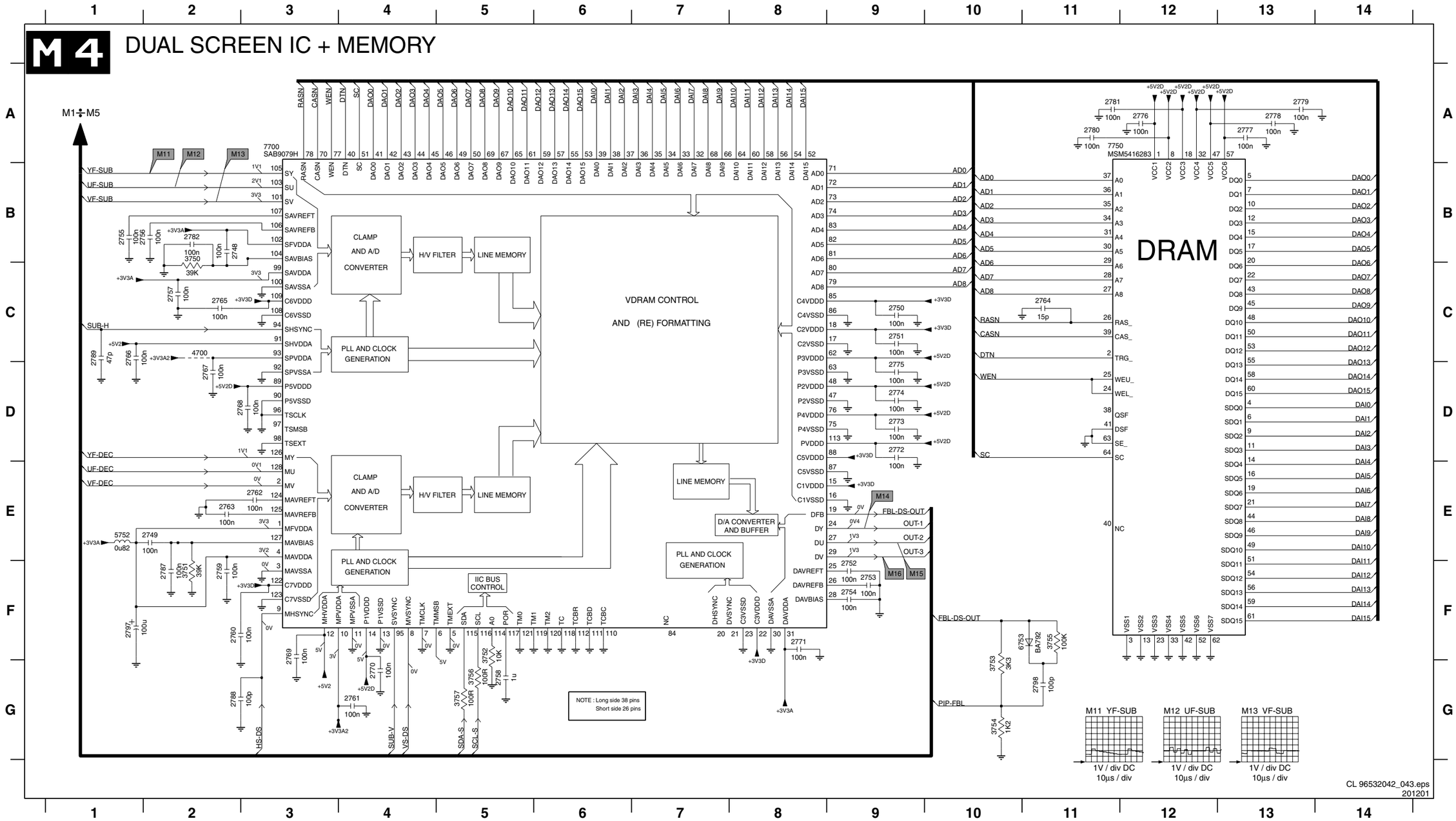

FDS Module: Audio

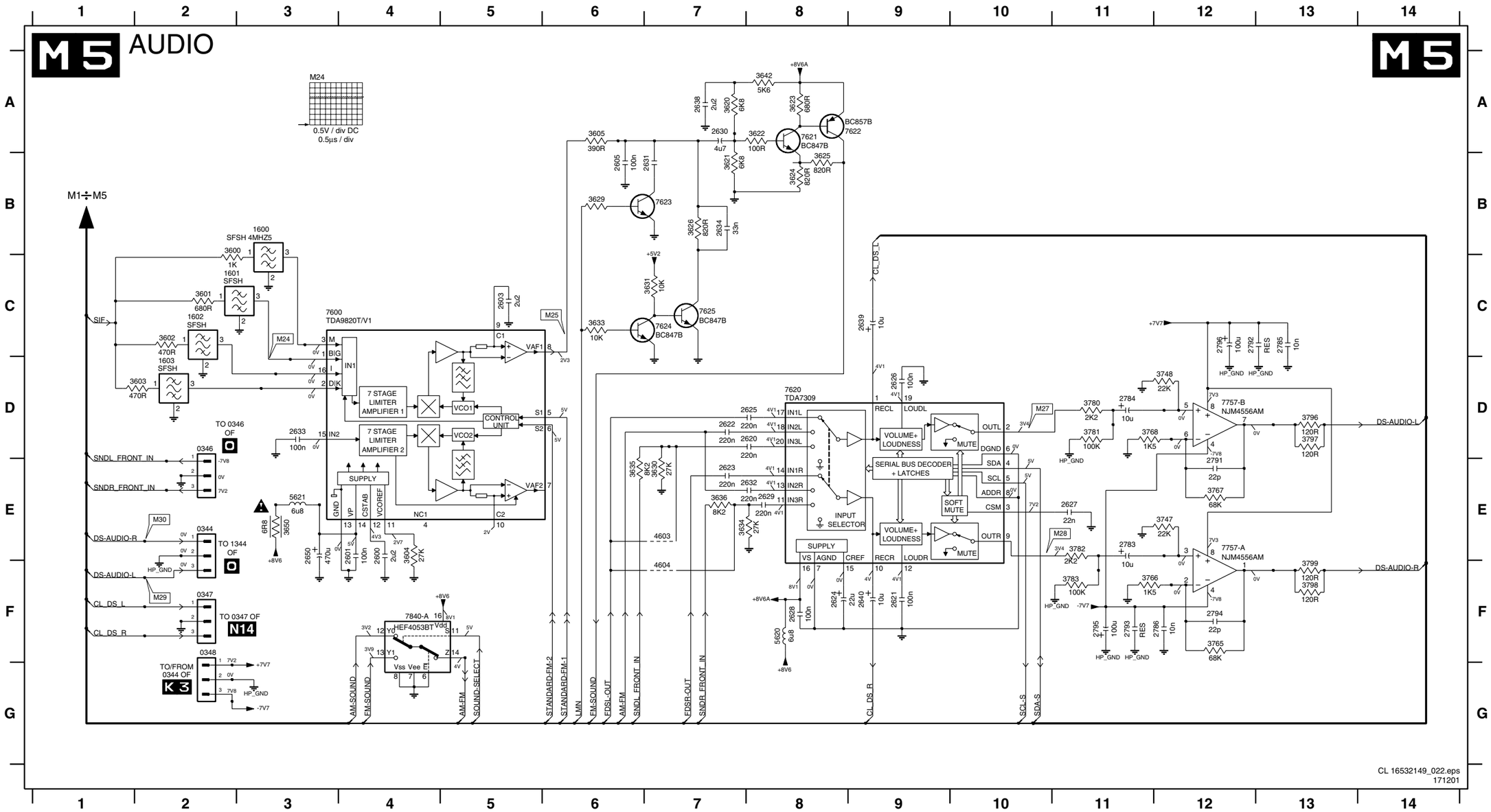

0344 E2
0346 D2
0347 F2
0348 F2
1600 B3
1601 C2
1602 C2
1603 D2
2600 E4
2601 E4
2603 C5
2605 B6
2620 D8
2621 F9
2622 D7
2623 E7
2624 F8
2625 D8
2626 D9
2627 E11
2628 F8
2629 E8
2630 A7
2631 B7
2632 E8
2633 D3
2634 B7
2638 A7
2639 C9
2640 F9
2650 E3
2783 E11
2784 D11
2785 C13
2786 F12
2791 E12
2792 C12
2793 F11
2794 F12
2795 F11
2796 C12
3600 B2
3601 C2
3602 C2
3603 D2
3604 E4
3605 A6
3620 A7
3621 B7
3622 A8
3623 A8
3624 B8
3625 B8
3626 B7
3629 B6
3630 E7
3631 C7
3633 C6
3634 E7
3635 E6
3636 E7
3642 A8
3650 E3
3747 E12
3748 D12
3765 F12
3766 F11
3767 E12
3768 D11
3780 D11
3781 D11
3782 E11
3783 F11
3796 D13
3797 D13
3798 F13
3799 F13
4603 E7
4604 F7
5620 F8
5621 E3
7600 C3
7620 D8
7621 A8
7622 A8
7623 B7
7624 C7
7625 C7
7757-A E12
7757-B D12
7840-A F4

Layout FDS Module (Top View)

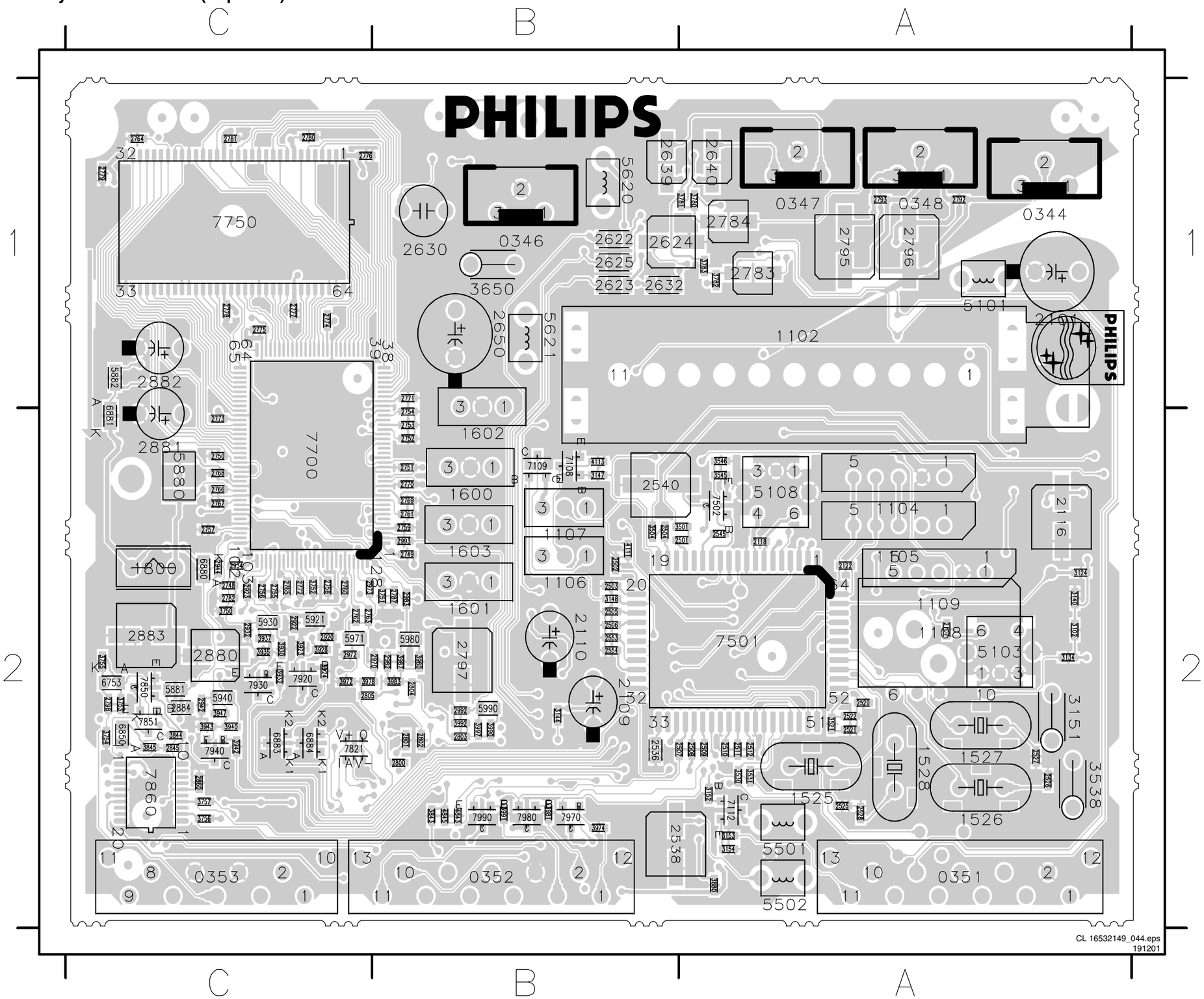

0344	A1	2757	C2	3501	A2	7108	B2
0346	B1	2758	C2	3504	B2	7109	B2
0347	A1	2759	B2	3521	A2	7112	A2
0348	A1	2760	C2	3530	A2	7501	B2
0351	A2	2761	B2	3531	A2	7502	A2
0352	B2	2762	C2	3538	A2	7700	C1
0353	C2	2763	C2	3545	A2	7750	C1
1102	A1	2764	C1	3546	A2	7821	C2
1104	A2	2765	C2	3650	B1	7850	C2
1105	A2	2766	C2	3750	C2	7851	C2
1106	B2	2767	C2	3751	B2	7860	C2
1107	B2	2768	C2	3752	C2	7920	C2
1108	A2	2769	B2	3753	C2	7930	C2
1109	A2	2770	B2	3754	C2	7940	C2
1525	A2	2771	B1	3755	C2	7970	B2
1526	A2	2772	C2	3756	C2	7980	B2
1527	A2	2773	C2	3757	C2	7990	B2
1528	A2	2774	C1	3780	A1		
1600	B2	2775	C1	3781	A1		
1601	B2	2776	C1	3782	A1		
1602	B2	2777	C1	3783	A1		
1603	B2	2778	C1	3843	B2		
1800	C2	2779	C1	3844	C2		
2101	A1	2780	C1	3845	C2		
2107	A2	2781	C1	3880	A2		
2109	B2	2782	C2	3923	C2		
2110	B2	2783	A1	3924	C2		
2116	A2	2784	A1	3928	C2		
2118	A2	2787	B2	3930	C2		
2122	A2	2792	A1	3932	C2		
2501	A2	2793	A1	3935	C2		
2502	B2	2795	A1	3937	C2		
2503	B2	2796	A1	3940	C2		
2504	B2	2797	B2	3942	C2		
2505	B2	2798	C2	3943	C2		
2506	B2	2800	B2	3947	C2		
2507	A2	2801	B2	3972	C2		
2508	A2	2802	B2	3974	B2		
2509	A2	2803	B2	3978	C2		
2510	A2	2804	B2	3980	B2		
2511	A2	2805	C2	3981	B2		
2512	A2	2845	C2	3983	B2		
2520	A2	2860	C2	3987	B2		
2521	A2	2880	C2	3990	B2		
2522	A2	2881	C1	3991	B2		
2525	A2	2882	C1	3992	B2		
2526	A2	2883	C2	3997	B2		
2527	A2	2884	C2	4111	B2		
2528	A2	2920	C2	4113	B2		
2536	B2	2922	C2	4843	B2		
2538	B2	2923	C2	4845	B2		
2540	B2	2932	C2	5101	A1		
2545	A2	2934	C2	5103	A2		
2553	B2	2942	C2	5108	A2		
2554	B2	2944	C2	5501	A2		
2622	B1	2970	B2	5502	A2		
2623	B1	2972	C2	5620	B1		
2624	B1	2973	C2	5621	B1		
2625	B1	2982	B2	5880	C2		
2630	B1	2983	B2	5881	C2		
2632	B1	2992	B2	5882	C1		
2639	A1	2993	B2	5921	C2		
2640	A1	3102	A2	5930	C2		
2650	B1	3124	A2	5940	C2		
2748	C2	3134	A2	5971	C2		
2749	B2	3140	A2	5980	B2		
2750	C2	3144	B2	5990	B2		
2751	B2	3147	B2	6753	C2		
2752	B2	3148	B2	6850	C2		
2753	B2	3151	A2	6880	C2		
2754	B2	3152	A2	6881	C2		
2755	C2	3153	A2	6883	C2		
2756	C2	3154	A2	6884	C2		

Layout FDS Module (Bottom View)

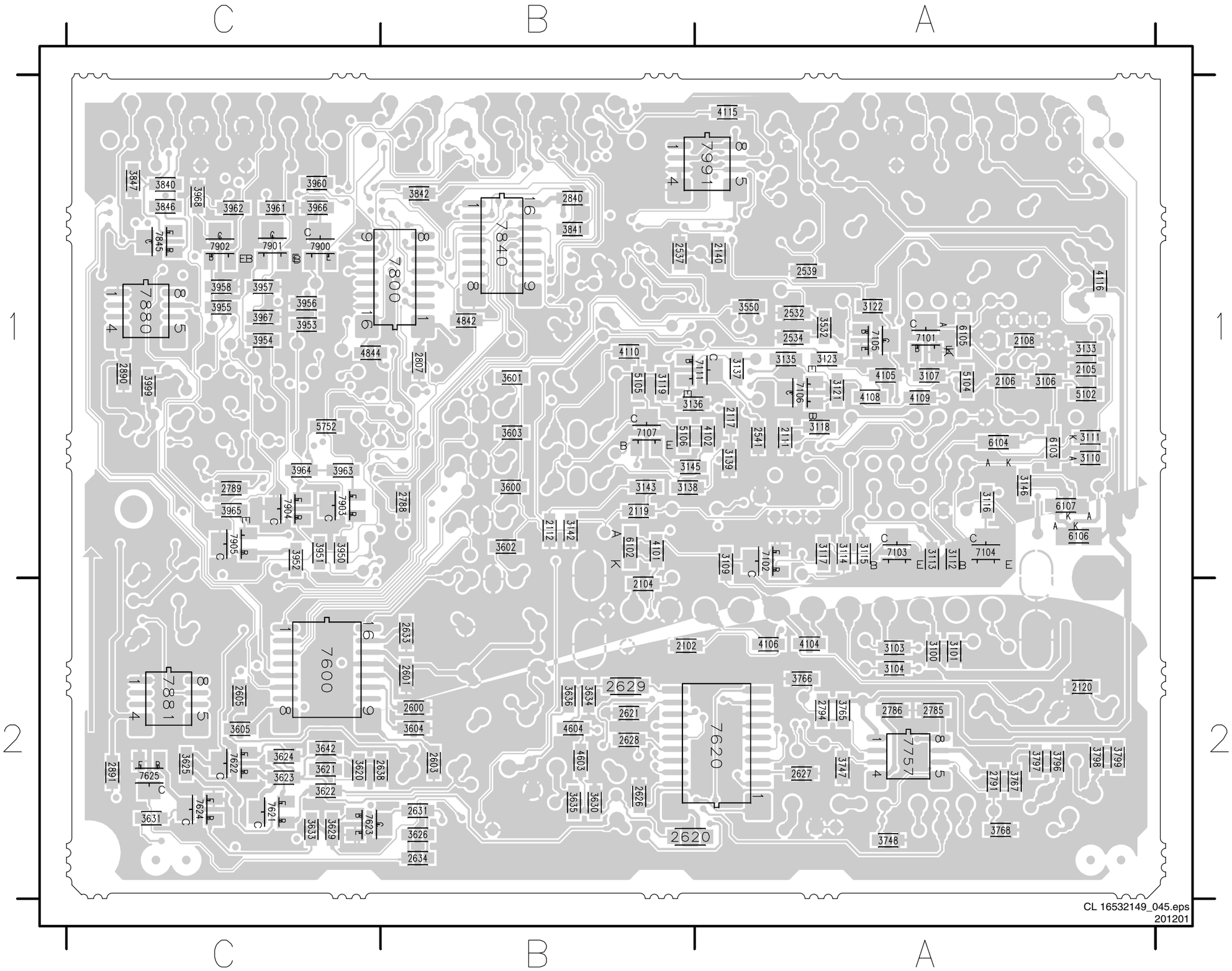

2102	B2	3602	B1	6104	A1
2104	B2	3603	B1	6105	A1
2105	A1	3604	B2	6106	A1
2106	A1	3605	C2	6107	A1
2108	A1	3620	C2	7101	A1
2111	A1	3621	C2	7102	A1
2112	B1	3622	C2	7103	A2
2117	A1	3623	C2	7104	A2
2119	B1	3624	C2	7105	A1
2120	A2	3625	C2	7106	A1
2140	A1	3626	B2	7107	B1
2532	A1	3629	C2	7111	A1
2534	A1	3630	B2	7600	C2
2537	B1	3631	C2	7620	A2
2539	A1	3633	C2	7621	C2
2541	A1	3634	B2	7622	C2
2600	B2	3635	B2	7623	C2
2601	B2	3636	B2	7624	C2
2603	B2	3642	C2	7625	C2
2605	C2	3747	A2	7757	A2
2620	B2	3748	A2	7800	B1
2621	B2	3765	A2	7840	B1
2626	B2	3766	A2	7845	C1
2627	A2	3767	A2	7880	C1
2628	B2	3768	A2	7881	C2
2629	B2	3796	A2	7900	C1
2631	B2	3797	A2	7901	C1
2633	B2	3798	A2	7902	C1
2634	B2	3799	A2	7903	C1
2638	B2	3840	C1	7904	C1
2785	A2	3841	B1	7905	C1
2786	A2	3842	B1	7991	A1
2788	B1	3846	C1		
2789	C1	3847	C1		
2791	A2	3950	C1		
2794	A2	3951	C1		
2807	B1	3952	C1		
2840	B1	3953	C1		
2890	C1	3954	C1		
2891	C2	3955	C1		
3100	A2	3956	C1		
3101	A2	3957	C1		
3103	A2	3958	C1		
3104	A2	3960	C1		
3106	A1	3961	C1		
3107	A1	3962	C1		
3109	A1	3963	C1		
3110	A1	3964	C1		
3111	A1	3965	C1		
3112	A1	3966	C1		
3113	A1	3967	C1		
3114	A1	3968	C1		
3115	A1	3999	C1		
3116	A1	4101	B1		
3117	A1	4102	A1		
3118	A1	4104	A2		
3119	B1	4105	A1		
3121	A1	4106	A2		
3122	A1	4108	A1		
3123	A1	4109	A1		
3133	A1	4110	B1		
3135	A1	4115	A1		
3136	B1	4116	A1		
3137	A1	4603	B2		
3138	B1	4604	B2		
3139	A1	4842	B1		
3142	B1	4844	C1		
3143	B1	5102	A1		
3145	B1	5104	A1		
3146	A1	5105	B1		
3532	A1	5106	B1		
3550	A1	5752	C1		
3600	B1	6102	B1		
3601	B1	6103	A1		

Multi-Channel Sound Module: Core Top Level

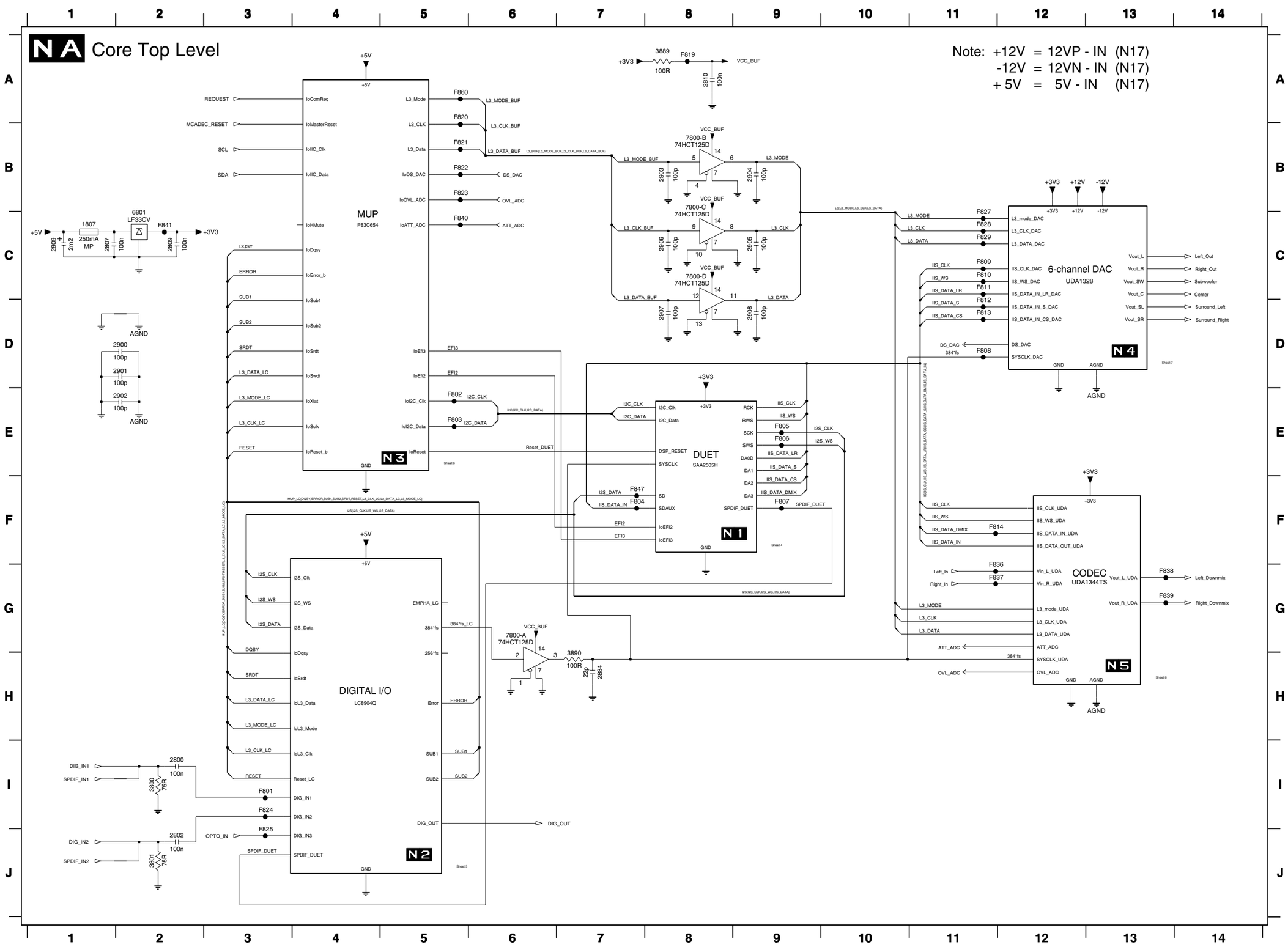

2800 I2
2802 J2
2807 C1
2809 C2
2810 A8
2884 H7
2900 D2
2901 D2
2902 E2
2903 B8
2904 B9
2905 C9
2906 C8
2907 D8
2908 D9
2909 C1
3800 I2
3801 J2
3889 A8
3890 H7
6801 C2
7800-A G6
7800-B B8
7800-C B8
7800-D C8
F801 I3
F802 E5
F803 E5
F804 F7
F805 E9
F806 E9
F807 F9
F808 D11
F809 C11
F810 C11
F811 C11
F812 D11
F813 D11
F814 F11
F819 A8
F820 A5
F821 B5
F822 B5
F823 B5
F824 I3
F825 J3
F827 C11
F828 C11
F829 C11
F836 G11
F837 G11
F838 G13
F839 G13
F840 C5
F841 A2
F847 F7
F860 A5

CL 96532042_029
200599

Multi-Channel Sound Module: Top Level

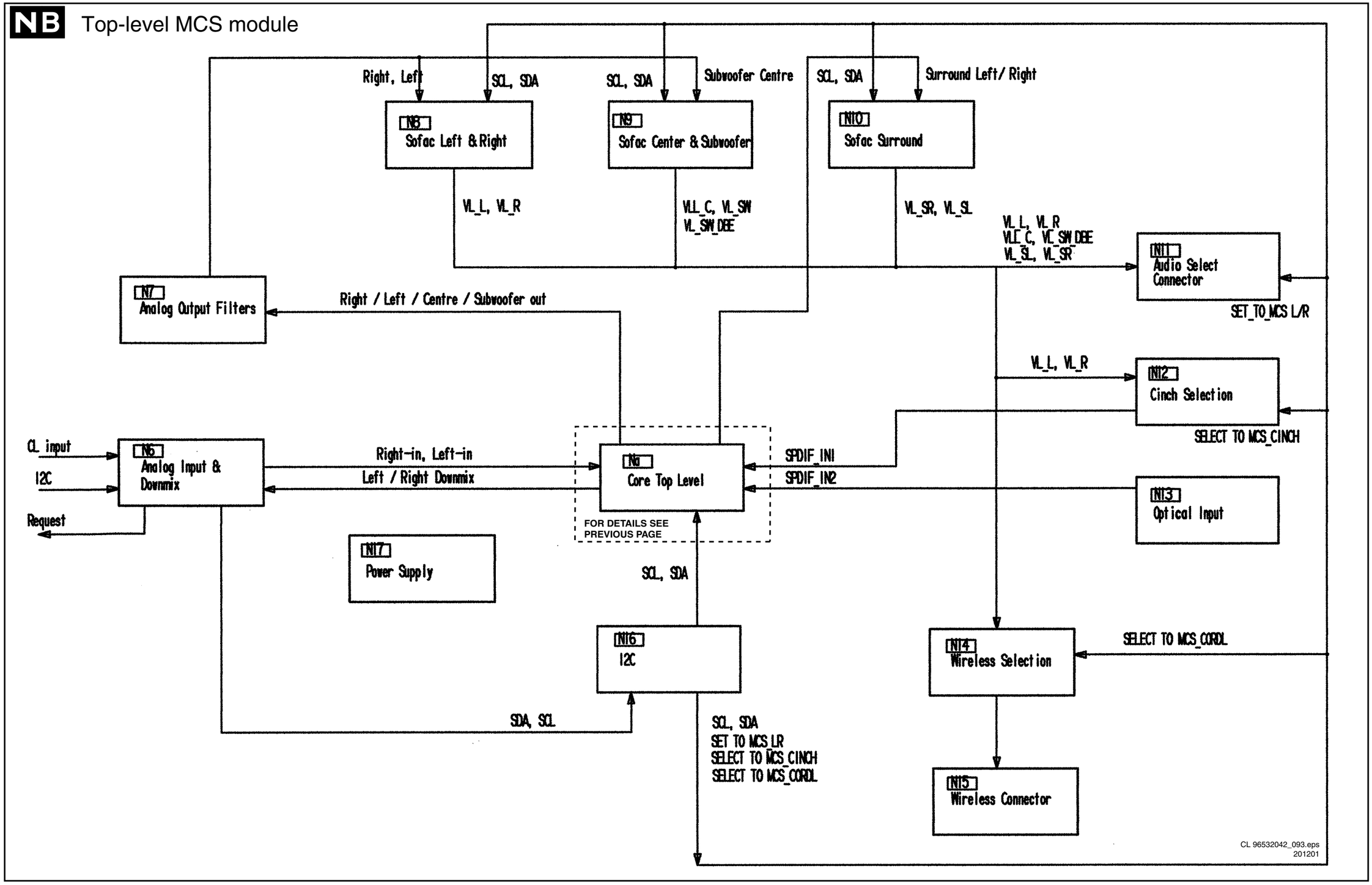

Multi-Channel Sound Module: Duet SAA2505H

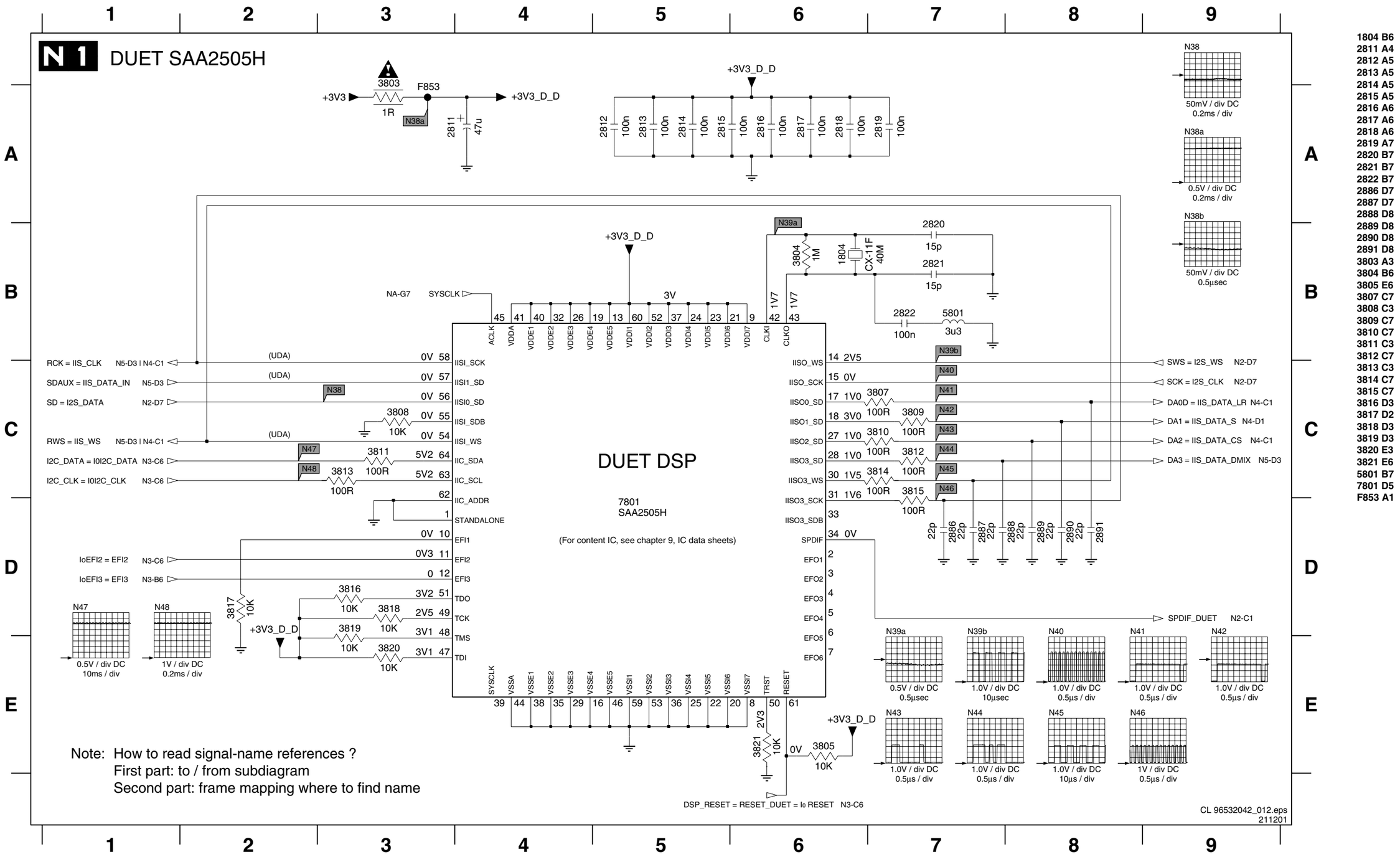

1804 B6
2811 A4
2812 A5
2813 A5
2814 A5
2815 A5
2816 A6
2817 A6
2818 A6
2819 A7
2820 B7
2821 B7
2822 B7
2886 D7
2887 D7
2888 D8
2889 D8
2890 D8
2891 D8
3803 A3
3804 B6
3805 E6
3807 C7
3808 C3
3809 C7
3810 C7
3811 C3
3812 C7
3813 C3
3814 C7
3815 C7
3816 D3
3817 D2
3818 D3
3819 D3
3820 E3
3821 E6
5801 B7
7801 D5
F853 A1

Multi-Channel Sound Module: Digital I/O LC8904Q

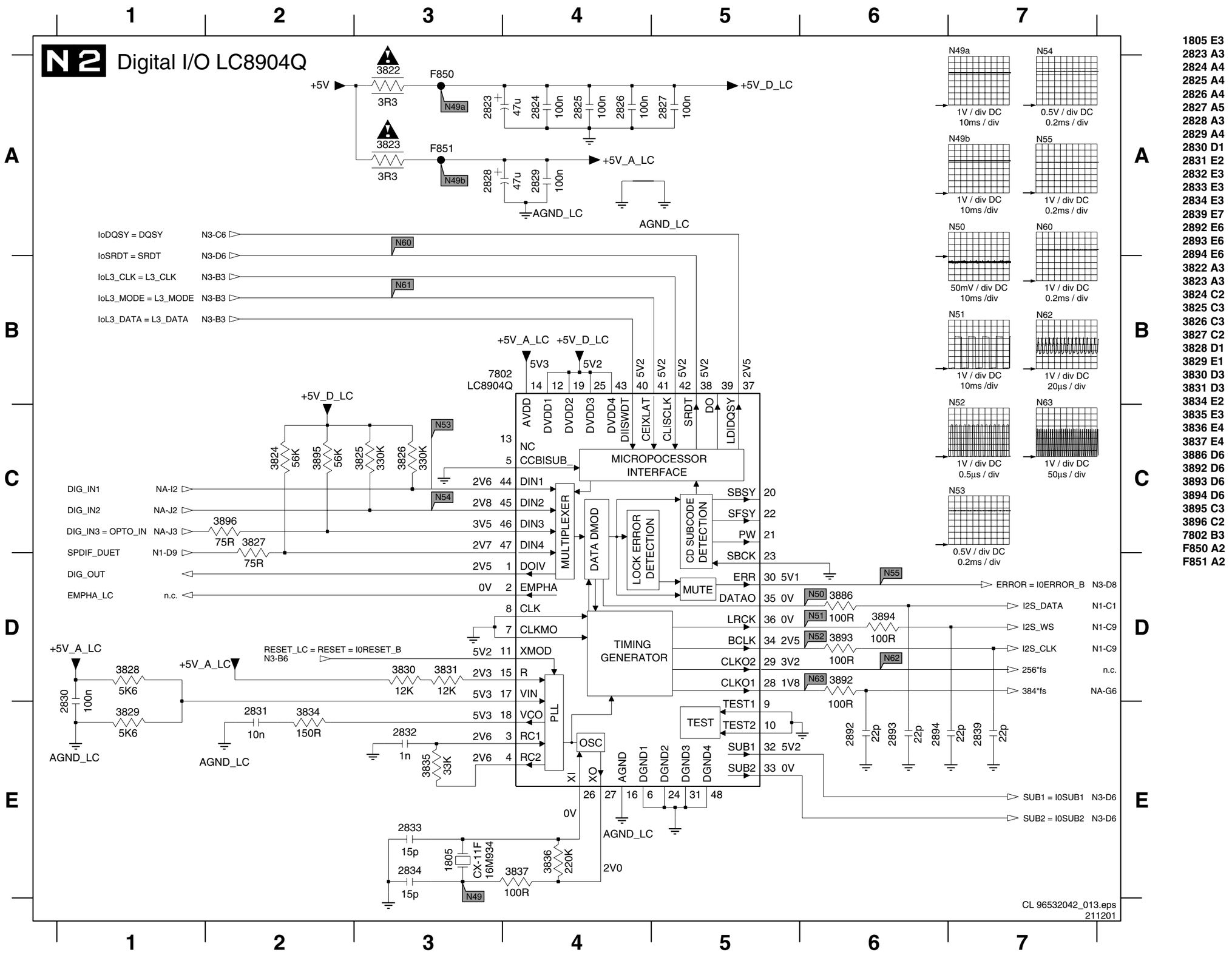

1805 E3
2823 A3
2824 A4
2825 A4
2826 A4
2827 A5
2828 A3
2829 A4
2830 D1
2831 E2
2832 E3
2833 E3
2834 E3
2839 E7
2892 E6
2893 E6
2894 E6
3822 A3
3823 A3
3824 C2
3825 C3
3826 C3
3827 C2
3828 D1
3829 E1
3830 D3
3831 D3
3834 E2
3835 E3
3836 E4
3837 E4
3886 D6
3892 D6
3893 D6
3894 D6
3895 C3
3896 C2
7802 B3
F850 A2
F851 A2

Multi-Channel Sound Module: Micro Controller P83C654

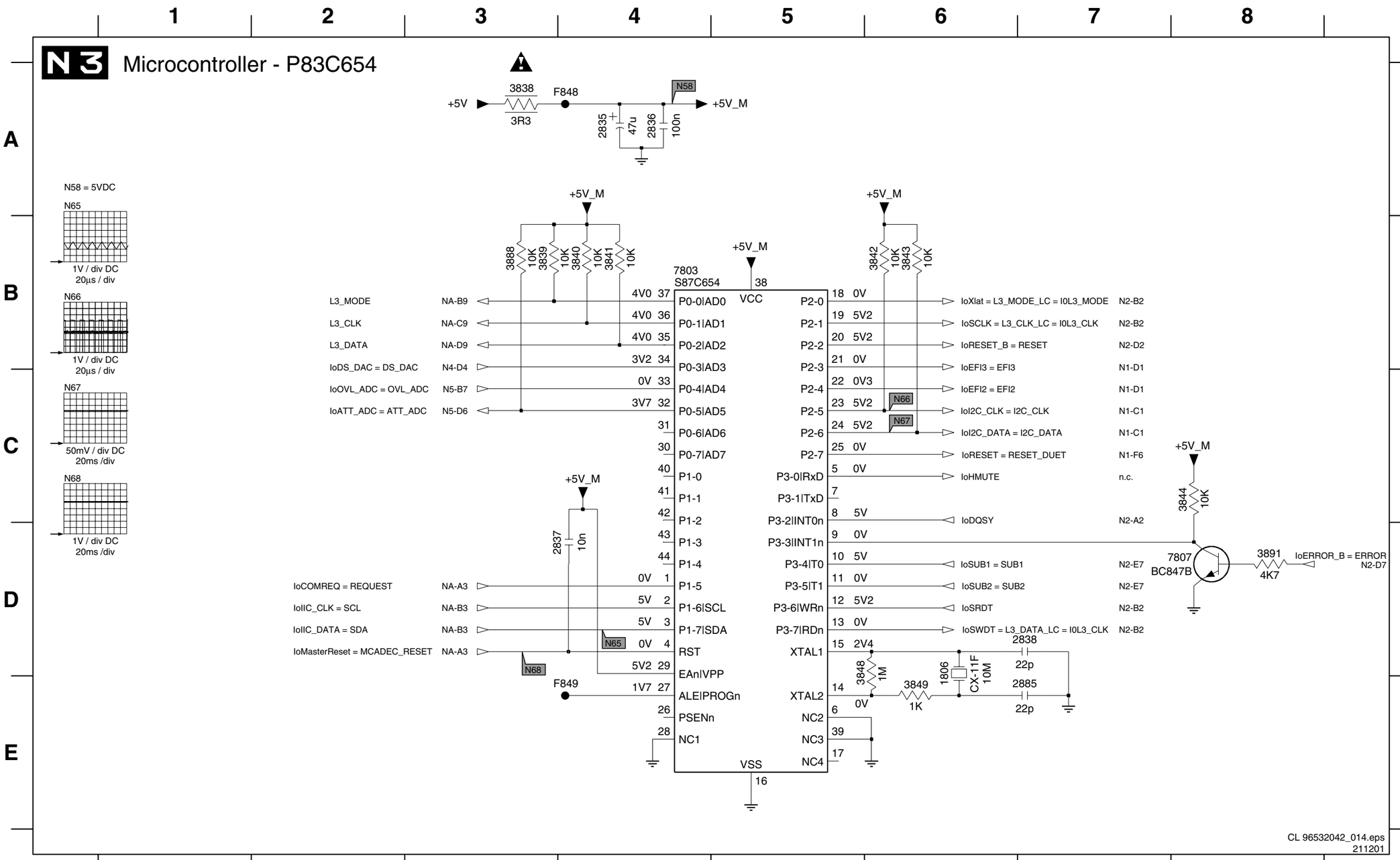

1806 D6
2835 A4
2836 A4
2837 D4
2838 D7
2885 E7
3838 A3
3839 B3
3840 B4
3841 B4
3842 B6
3843 B6
3844 C7
3848 D5
3849 E6
3888 B3
3891 D8
7803 B4
7807 D7
F848 A4
F849 E4

Multi-Channel Sound Module: 6-Channel DAC - UDA1328T

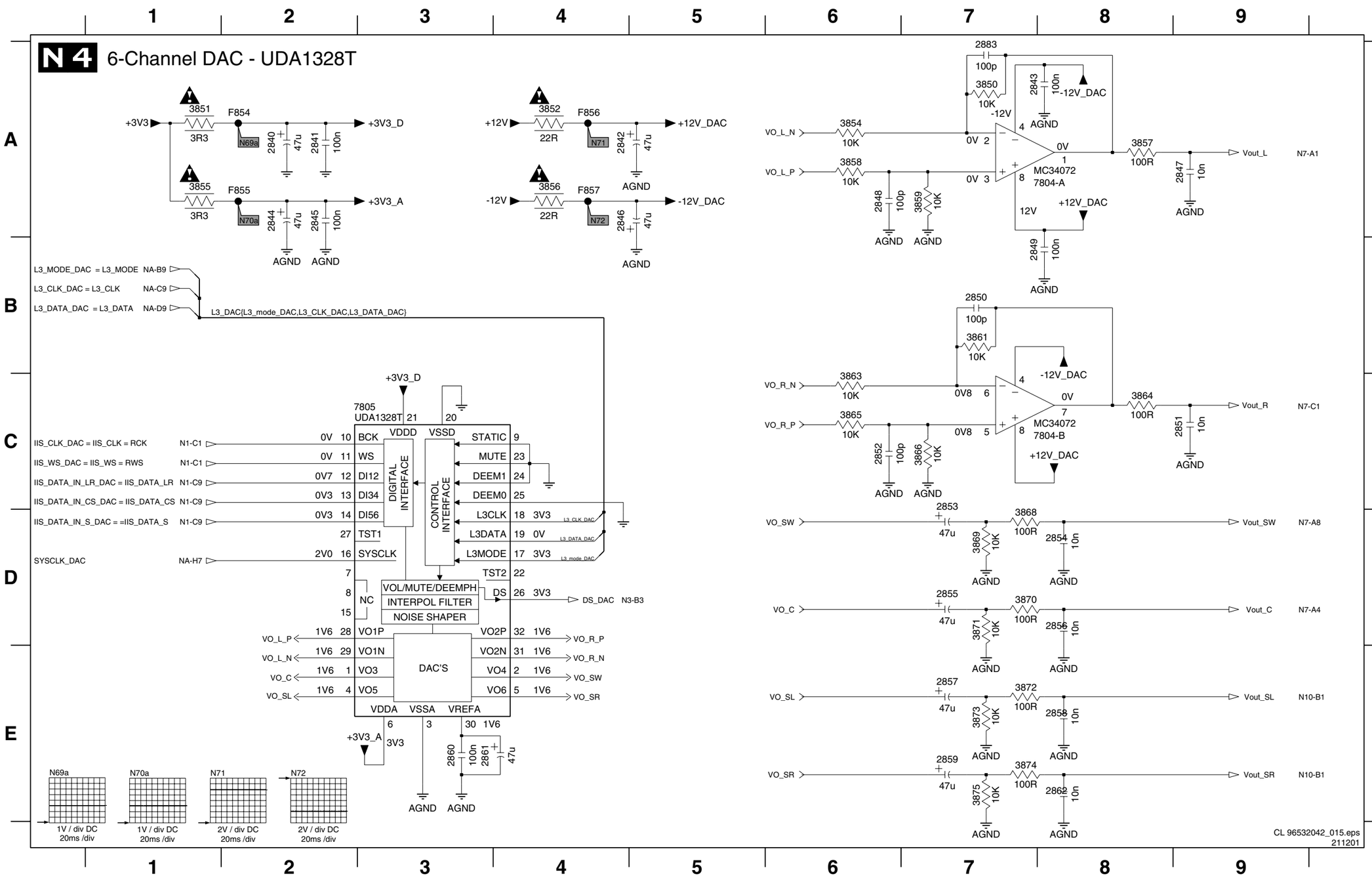

2840 A2
2841 A2
2842 A4
2843 A7
2844 A2
2845 A2
2846 A4
2847 A9
2848 A6
2849 B7
2850 B7
2851 C9
2852 C6
2853 D7
2854 D8
2855 D7
2856 D8
2857 E7
2858 E8
2859 E7
2860 E3
2861 E3
2862 E8
2883 A7
3850 A7
3851 A1
3852 A4
3854 A6
3855 A1
3856 A4
3857 A8
3858 A6
3859 A7
3861 B7
3863 C6
3864 C8
3865 C6
3866 C7
3868 D7
3869 D7
3870 D7
3871 D7
3872 E7
3873 E7
3874 E7
3875 E7
7804-A A7
7804-B C7
7805 C2
F854 A2
F855 A2
F856 A4
F857 A4

Multi-Channel Sound Module: Stereo CODEC - UDA 1344TS

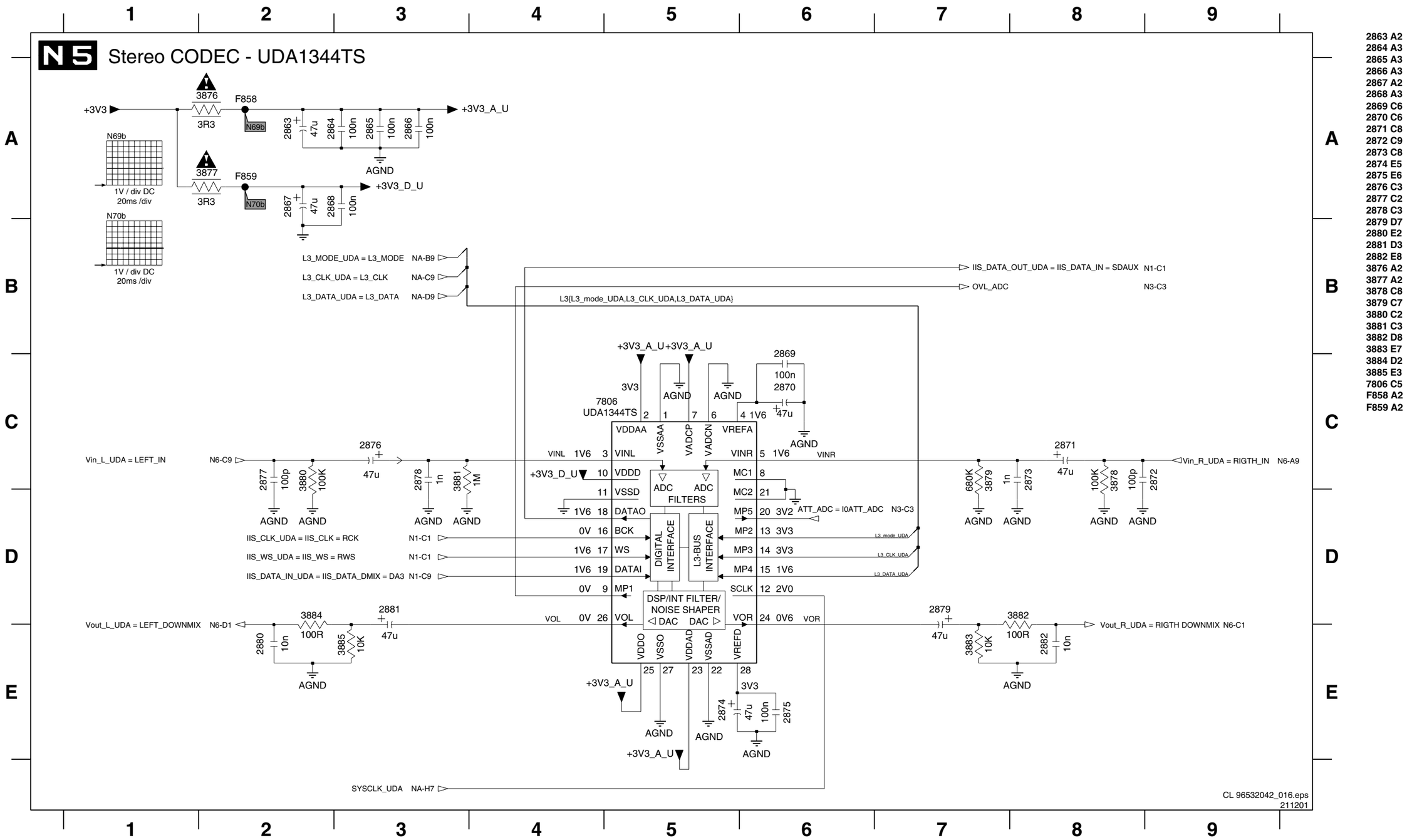

2863 A2
2864 A3
2865 A3
2866 A3
2867 A2
2868 A3
2869 C6
2870 C6
2871 C8
2872 C9
2873 C8
2874 E5
2875 E6
2876 C3
2877 C2
2878 C3
2879 D7
2880 E2
2881 D3
2882 E8
3876 A2
3877 A2
3878 C8
3879 C7
3880 C2
3881 C3
3882 D8
3883 E7
3884 D2
3885 E3
7806 C5
F858 A2
F859 A2

Multi-Channel Sound Module: Analog Input and Downmix

0373 D9	2505 A8	2512 D6	2524 C1	2537 D4	3501 B6	3506 A9	3511 B8	3516 A9	3521 D2	3526 C1	3533 C7	3538 D4	3549 C6	3579 E5	4500 E8	4520 C3	4529 D8	7512 C9	7713 E8
0381 A6	2506 C8	2520 C2	2525 E1	2538 E4	3502 A7	3507 C8	3512 D6	3517 B9	3522 E1	3527 D1	3534 B6	3539 D3	3570 E6	3598 D4	4501 E8	4522 E3	6525 E8	7520-A C2	
2500 A6	2507 B8	2521 E2	2534 C7	2539 A9	3503 C7	3508 C9	3513 C7	3518 C9	3523 E2	3530 A7	3535 C4	3542 E4	3572 D4	3599 E4	4505 A8	4526 B4	7505-A A8	7520-B D2	
2501 C6	2508 D8	2522 D2	2535 C4	2793 C9	3504 B6	3509 B7	3514 C8	3519 D5	3524 C1	3531 A7	3536 C3	3544 A9	3577 D8	3600 E4	4506 B8	4527 E3	7505-B B8	7535-A C4	
2504 B6	2511 E6	2523 E2	2536 E4	3500 A6	3505 A8	3510 B7	3515 A9	3520 C1	3525 D1	3532 B7	3537 C4	3545 B9	3578 D8	3799 E7	4507 B6	4528 D7	7510 A9	7535-B D4	

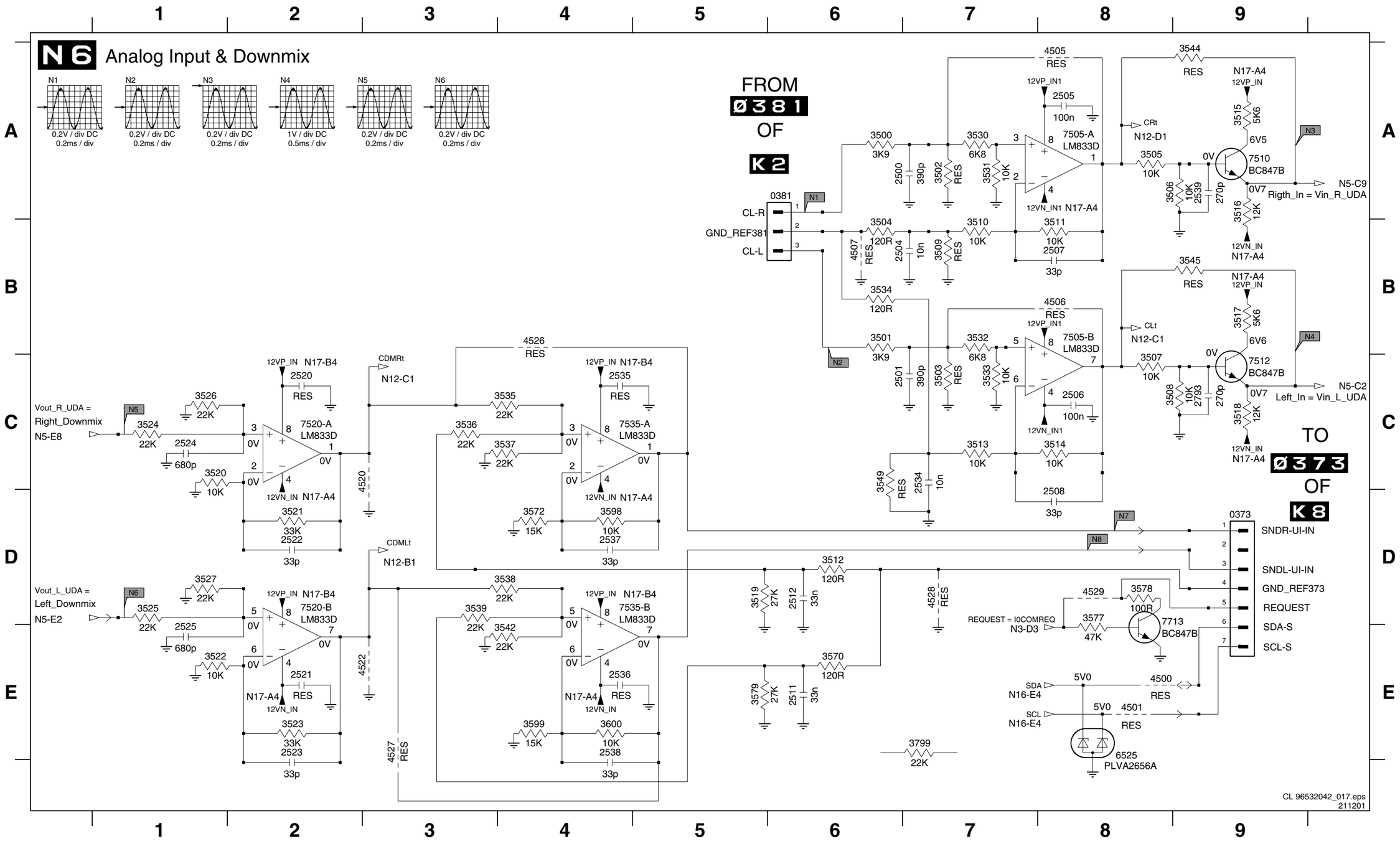

Multi-Channel Sound Module: Analog Output Filters

2548 A1	2557 C2	2578 A5	2587 C5	2610 D6	2667 C8	3540 A8	3548 A8	3552 D2	3558 A5	3567 B6	3574 D6	3592 D9	3728 B9	3792 B2	7541-A A3	7543-B C6
2551 A2	2558 A3	2580 A5	2599 D5	2629 A9	2668 D9	3546 B2	3550 C2	3554 D3	3562 A5	3568 C5	3575 D6	3596 D9	3729 C8	3793 A2	7541-B C3	7544-A A9
2552 C1	2559 D3	2585 B9	2608 A6	2632 D9	2669 D9	3547 B3	3551 D2	3555 A8	3566 B6	3569 C5	3576 A9	3727 B9	3737 C8	3794 A8	7543-A A6	7544-B C9

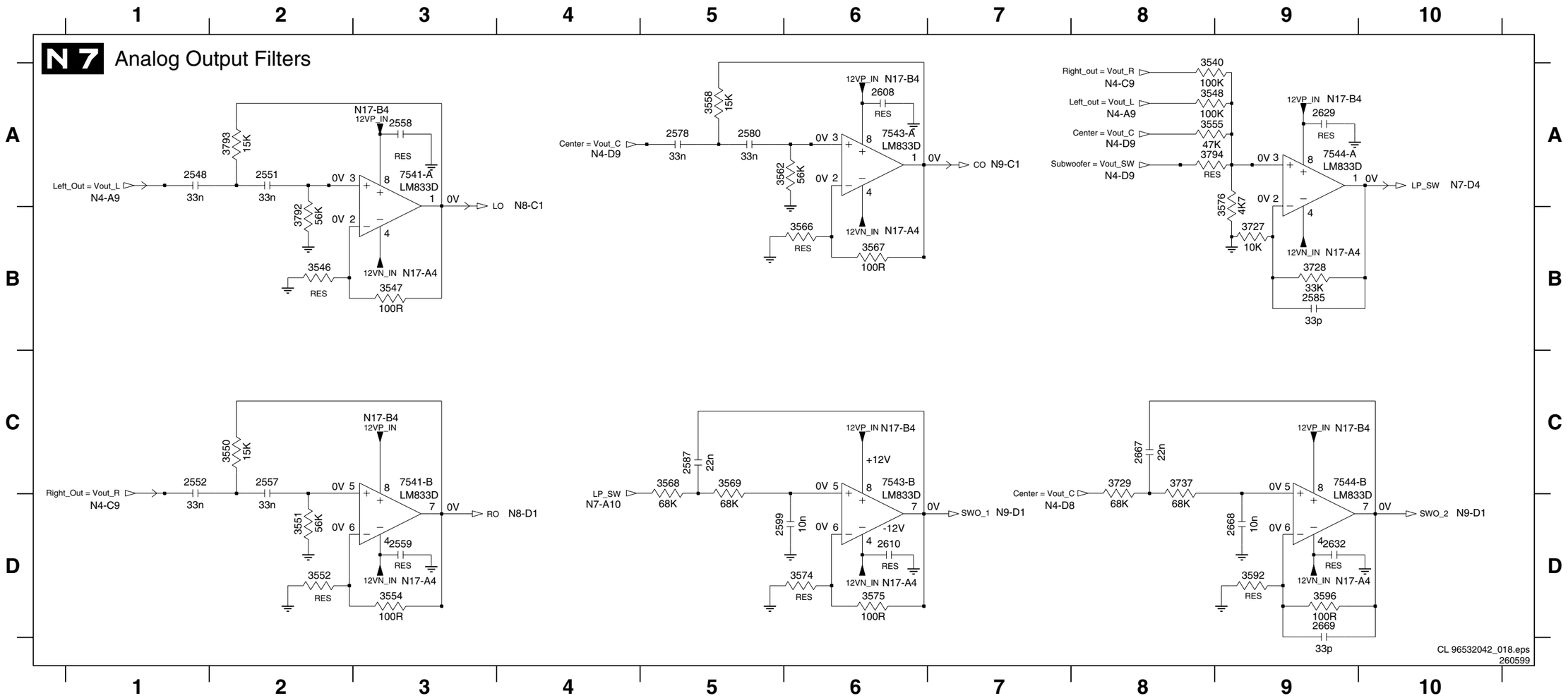

Multi-Channel Sound Module: Sofac Left and Right

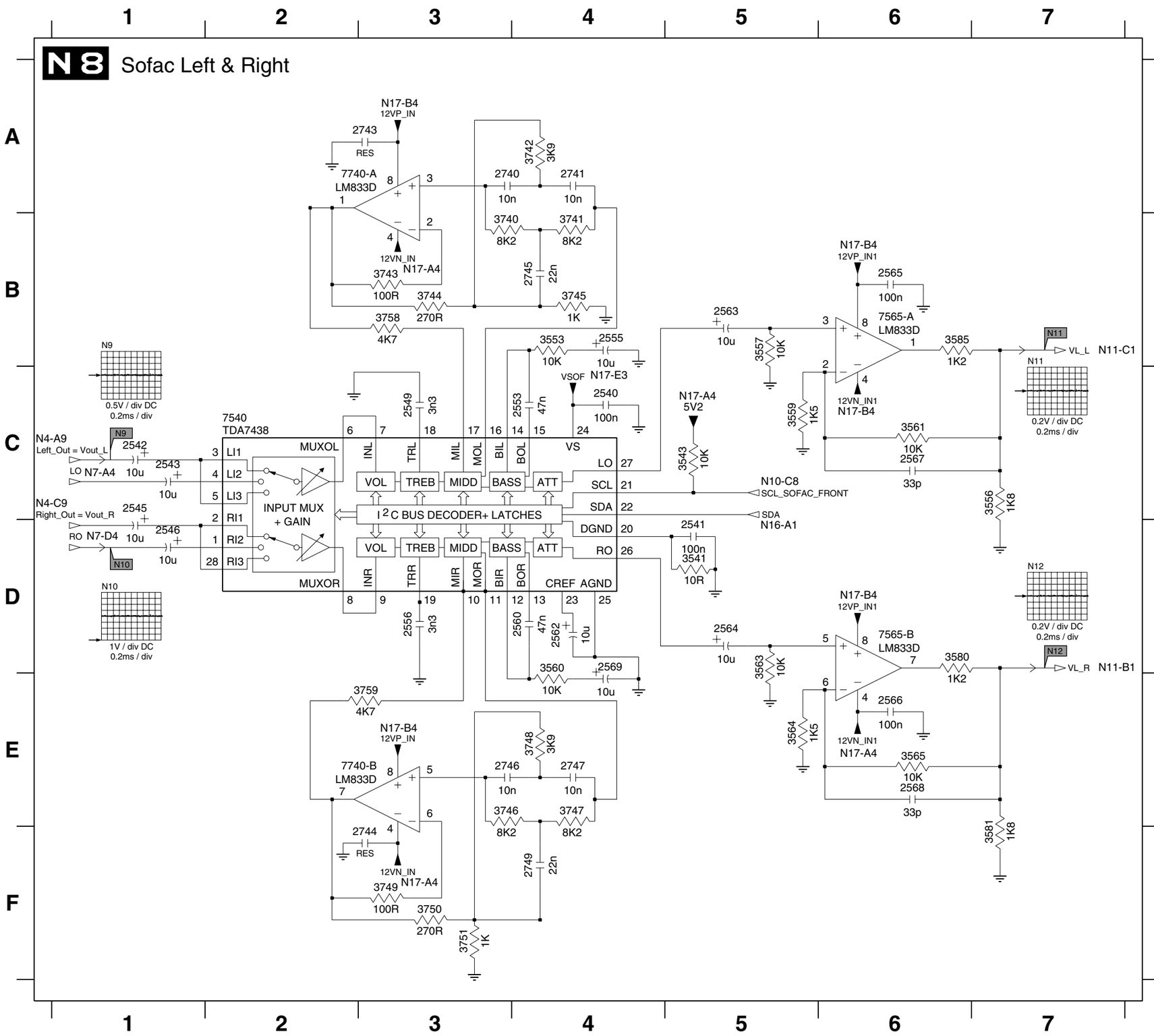

2540 C4
2541 D5
2542 C1
2543 C1
2545 C1
2546 D1
2549 C3
2553 C4
2555 B4
2556 D3
2560 D4
2562 D4
2563 B5
2564 D5
2565 B6
2566 E6
2567 C6
2568 E6
2569 D4
2740 A3
2741 A4
2743 A3
2744 F3
2745 B4
2746 E3
2747 E4
2749 F4
3541 D5
3543 C5
3553 B4
3556 C7
3557 B5
3559 C5
3560 D4
3561 C6
3563 D5
3564 E5
3565 E6
3580 D6
3581 F7
3585 B6
3740 B3
3741 B4
3742 A4
3743 B3
3744 B3
3745 B4
3746 E3
3747 E4
3748 E4
3749 F3
3750 F3
3751 F3
3758 B3
3759 E3
7540 C2
7565-A B6
7565-B D6
7740-A A3
7740-B E3

CL 96532042_019.eps
211201

Multi-Channel Sound Module: Sofac Center and Subwoofer

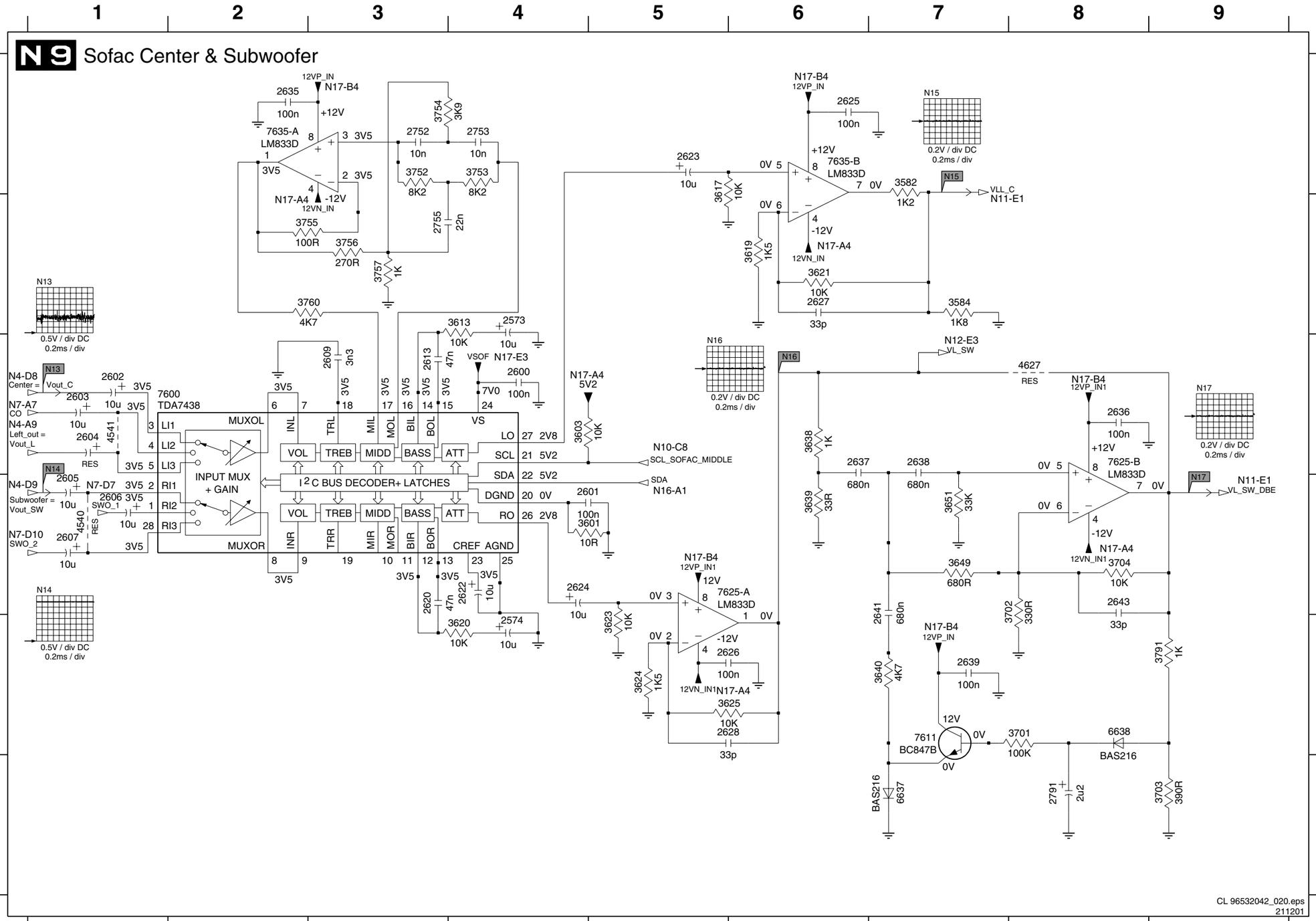

2573 B4	4540 D1
2574 E4	4541 C1
2600 C4	4627 C8
2601 D4	6637 F7
2602 C1	6638 E8
2603 C1	7600 C1
2604 C1	7611 E7
2605 D1	7625-A D5
2606 D1	7625-B C8
2607 D1	7635-A A2
2609 C3	7635-B A6
2613 C3	
2620 D3	
2622 D4	
2623 A5	
2624 D4	
2625 A6	
2626 E5	
2627 B6	
2628 E5	
2635 A2	
2636 C8	
2637 C6	
2638 C7	
2639 E7	
2641 D7	
2643 D8	
2752 A3	
2753 A4	
2755 B3	
2791 F8	
3582 A7	
3584 B7	
3601 D5	
3603 C4	
3613 B4	
3617 A5	
3619 B6	
3620 E4	
3621 B6	
3623 E5	
3624 E5	
3625 E6	
3638 C6	
3639 D6	
3640 E7	
3649 D7	
3651 D7	
3701 E8	
3702 D8	
3703 F9	
3704 D8	
3752 A3	
3753 A4	
3754 A3	
3755 B2	
3756 B3	
3757 B3	
3760 B3	
3791 E9	

Multi-Channel Sound Module: Sofac Surround

2570 B4	2572 B1	2576 A4	2579 B3	2586 C3	2592 C4	2594 C5	2596 D6	2598 D6	3571 C5	3583 A4	3589 B6	3591 B6	3594 D6	3671 B9	3795 C10	7595-A A6	7695 C8
2571 B5	2575 B1	2577 C4	2583 B3	2590 C3	2593 A5	2595 A6	2597 B6	2695 B8	3573 B5	3587 A6	3590 C4	3593 C6	3595 D6	3673 B9	7570 B2	7595-B C6	7696 D10

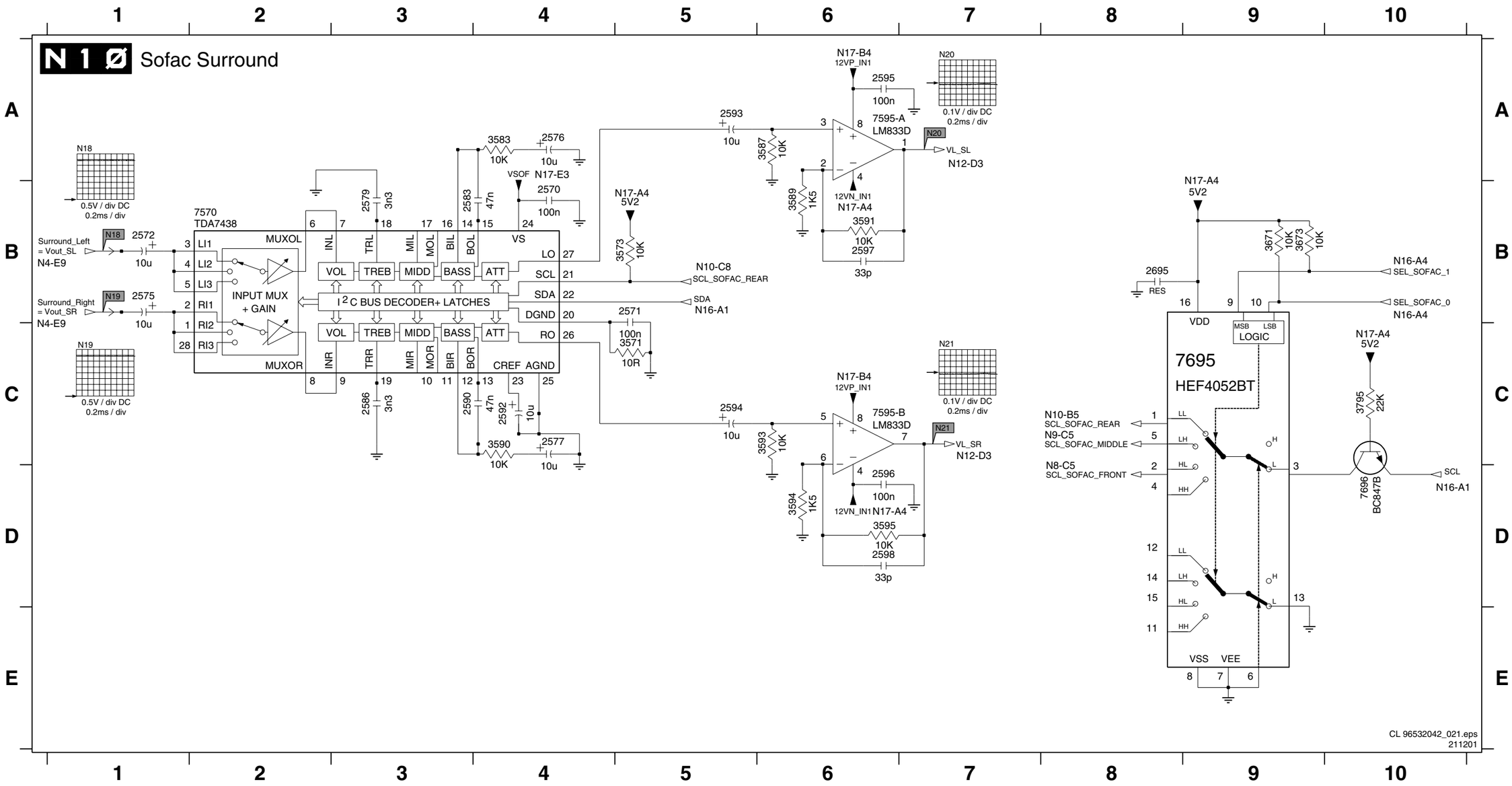

Multi-Channel Sound Module: Audio Out Select and Connector

0328 B4	2514 D2	2517 E2	2631 D2	4633 E3	4701 C3	4704 E2	4716 B3	4719 B4	5701 D3	5704 E2	7630 B1
0329 D4	2515 D2	2518 E2	3610 A3	4634 E2	4702 D2	4705 E2	4717 B4	4720 C4	5702 D2	5705 E2	
2513 C2	2516 E1	2630 A1	3611 A2	4700 B3	4703 E2	4715 B3	4718 B3	5700 C3	5703 E2	7610 A3	

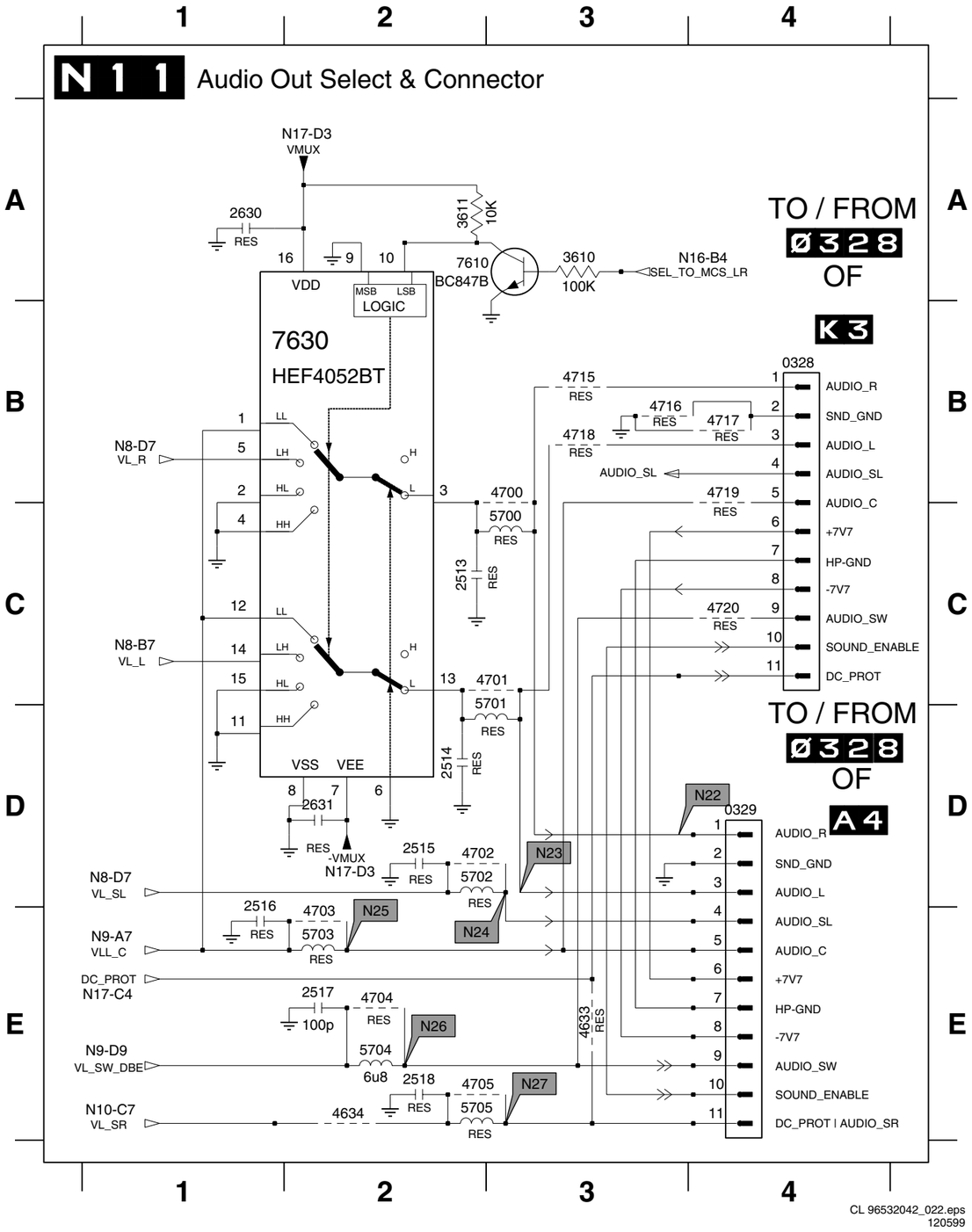

CL 96532042_022.eps
120599

Multi-Channel Sound Module: Optical Input

1996 B2
1997 A1
2670 A1
3604 B2
3670 A1
4502 B2

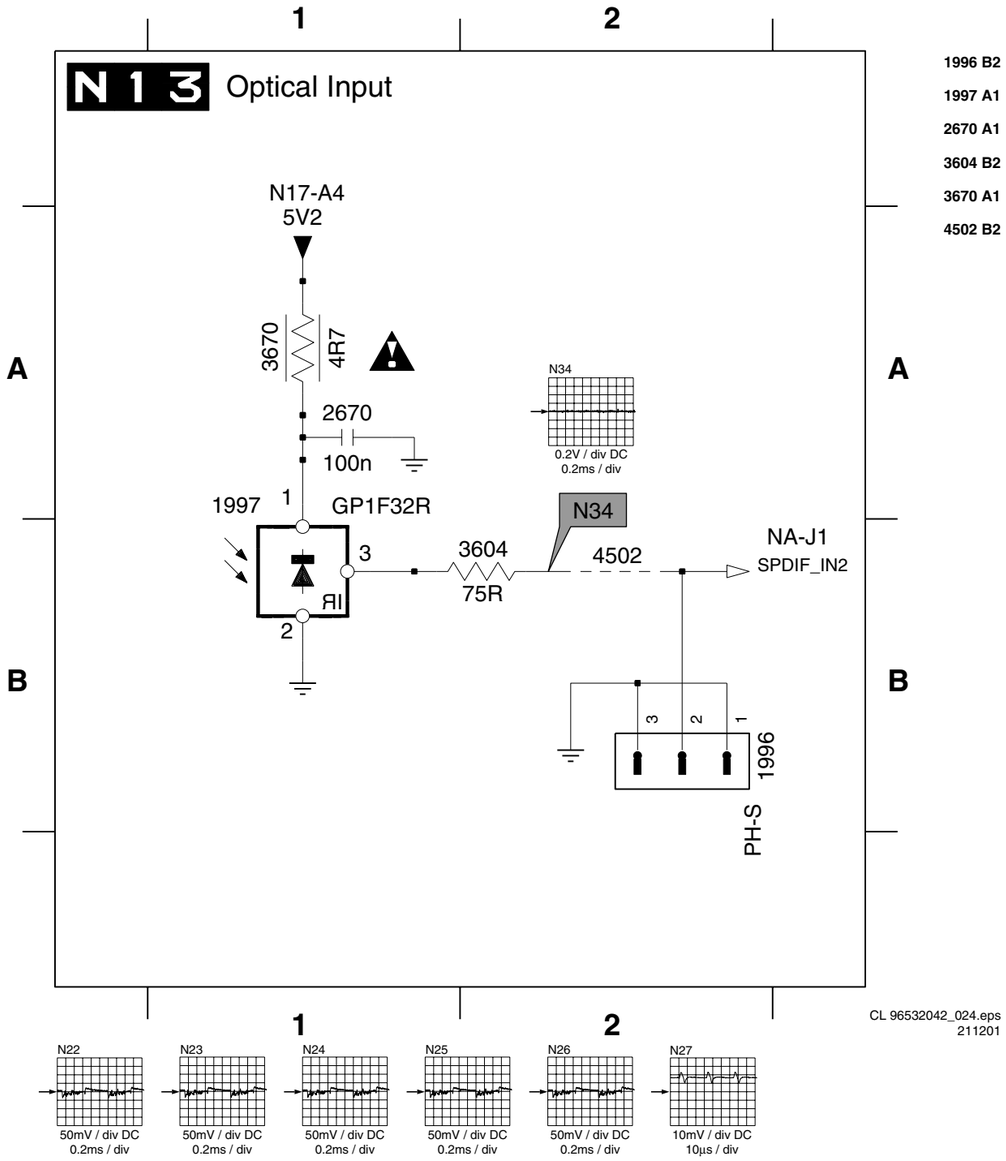

CL 96532042_024.eps
211201

Multi-Channel Sound Module: Cinch Selection

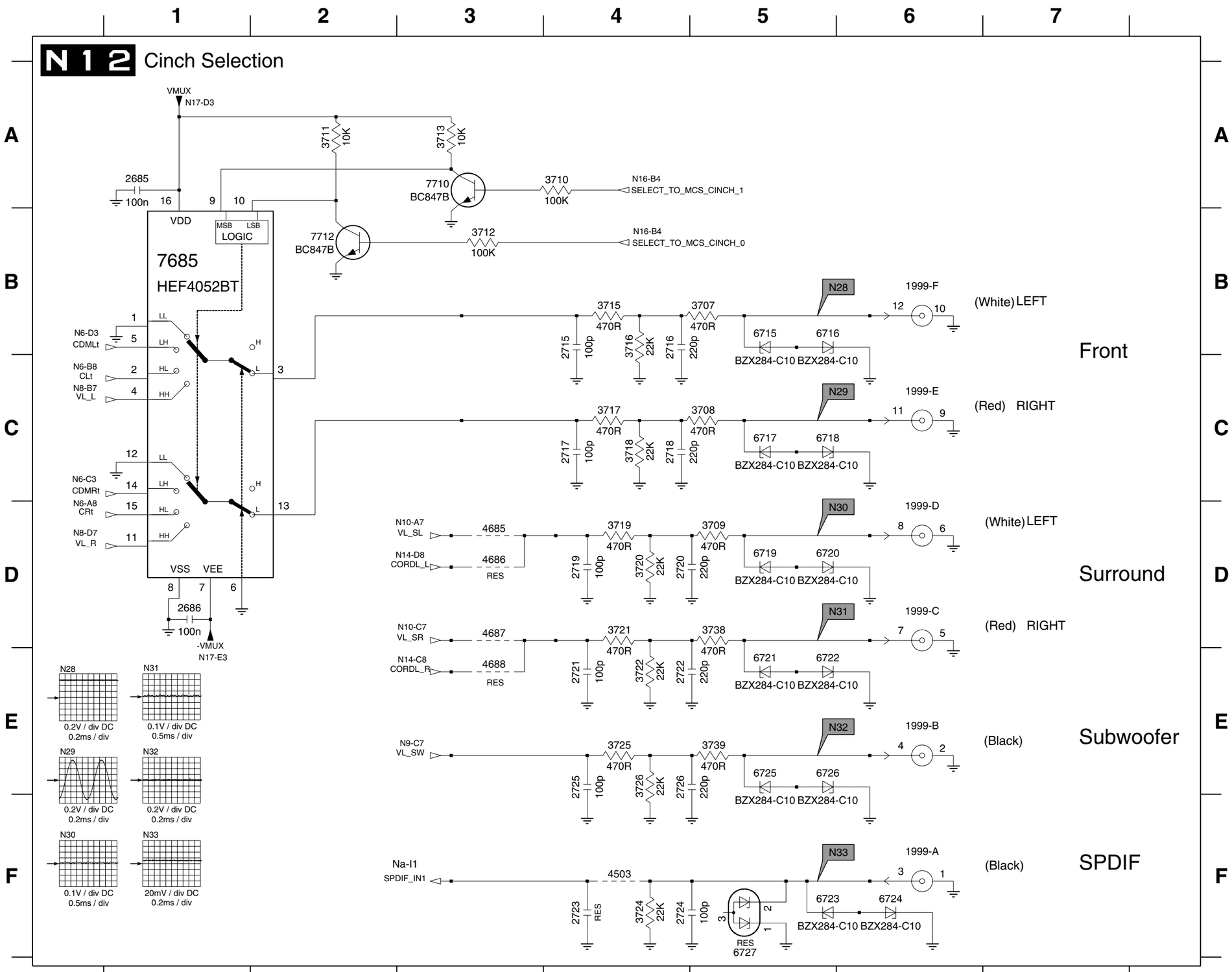

1999-A F6
1999-B E6
1999-C D6
1999-D D6
1999-E C6
1999-F B6
2685 A1
2686 D1
2715 B4
2716 B4
2717 C4
2718 C4
2719 D4
2720 D4
2721 E4
2722 E4
2723 F4
2724 F4
2725 E4
2726 E4
3707 B5
3708 C5
3709 D5
3710 A4
3711 A2
3712 B3
3713 A3
3715 B4
3716 B4
3717 C4
3718 C4
3719 D4
3720 D4
3721 D4
3722 E4
3724 F4
3725 E4
3726 E4
3738 D5
3739 E5
4503 F4
4685 D3
4686 D3
4687 D3
4688 E3
6715 B5
6716 B5
6717 C5
6718 C5
6719 D5
6720 D5
6721 E5
6722 E5
6723 F5
6724 F6
6725 E5
6726 E5
6727 F5
7685 B1
7710 A3
7712 B2

CL 96532042_023.eps
211201

Multi-Channel Sound Module: Wireless Selection

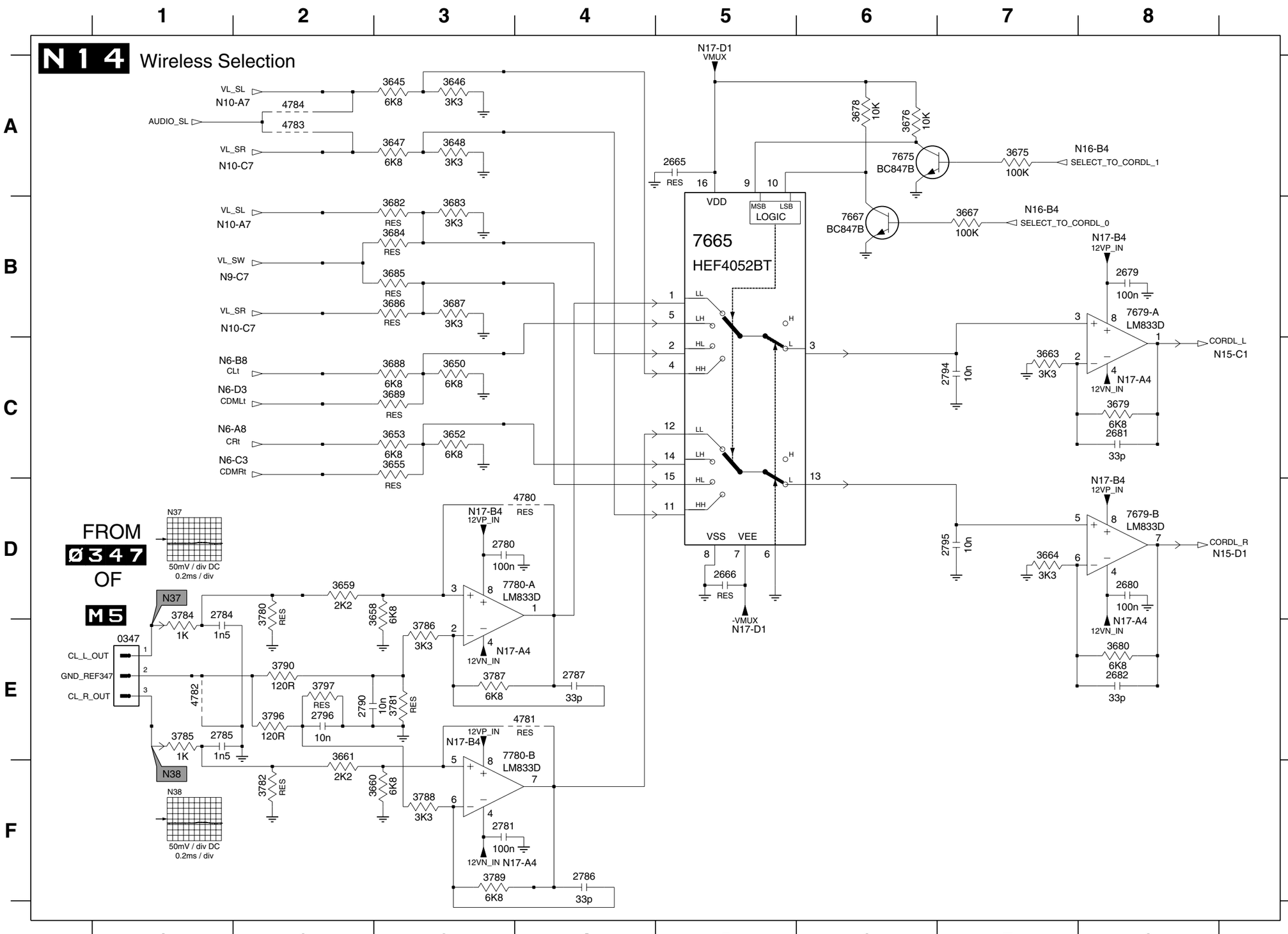

0347 E1
2665 A5
2666 D5
2679 B8
2680 D8
2681 C8
2682 E8
2780 D3
2781 F3
2784 D1
2785 E1
2786 F4
2787 E4
2790 E2
2794 C7
2795 D7
2796 E2
3645 A3
3646 A3
3647 A3
3648 A3
3650 C3
3652 C3
3653 C3
3655 C3
3658 D3
3659 D2
3660 F3
3661 E2
3663 C7
3664 D7
3667 B7
3675 A7
3676 A6
3678 A6
3679 C8
3680 E8
3682 B3
3683 B3
3684 B3
3685 B3
3686 B3
3687 B3
3688 C3
3689 C3
3780 D2
3781 E3
3782 F2
3784 D1
3785 E1
3786 E3
3787 E3
3788 F3
3789 F3
3790 E2
3796 E2
3797 E2
4780 D4
4781 E4
4782 E1
4783 A2
4784 A2
7665 B5
7667 B6
7675 A6
7679-A B8
7679-B D8
7780-A D3
7780-B E3

CL 96532042_025.eps
211201

Multi-Channel Sound Module: Wireless Connector

1998 C3 2731 C2 2733 D2 2735 B2 3731 C1 3733 D1 3735 B2 6731 C3 6733 D3 6735 A3
2730 C1 2732 D1 2734 A2 3730 C1 3732 D1 3734 A2 6730 C2 6732 D2 6734 A3 6736 B2

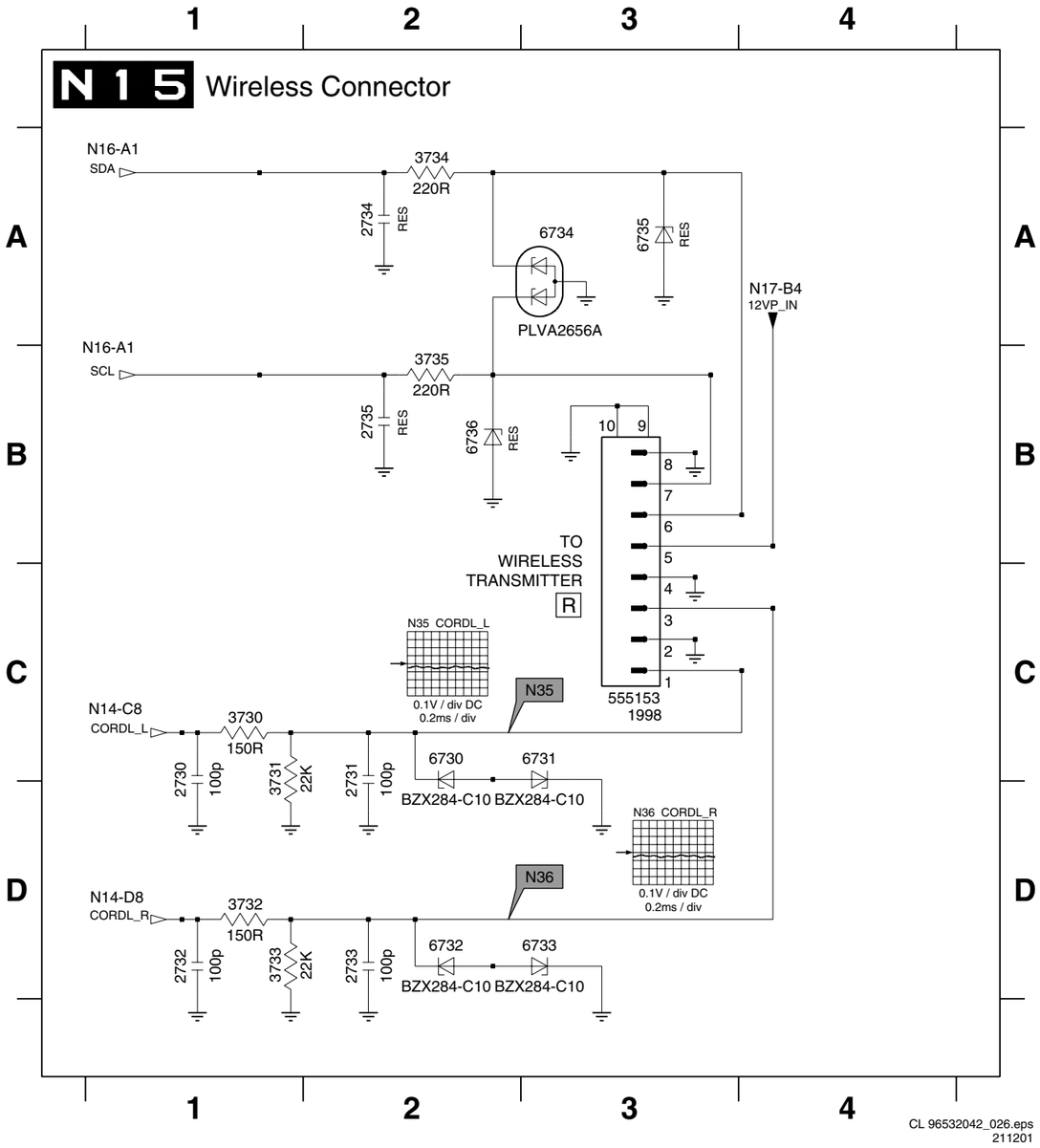

CL 96532042_026.eps
211201

Multi-Channel Sound Module: I²C

2690 B1 3699 E4 3700 E4 7690 A1

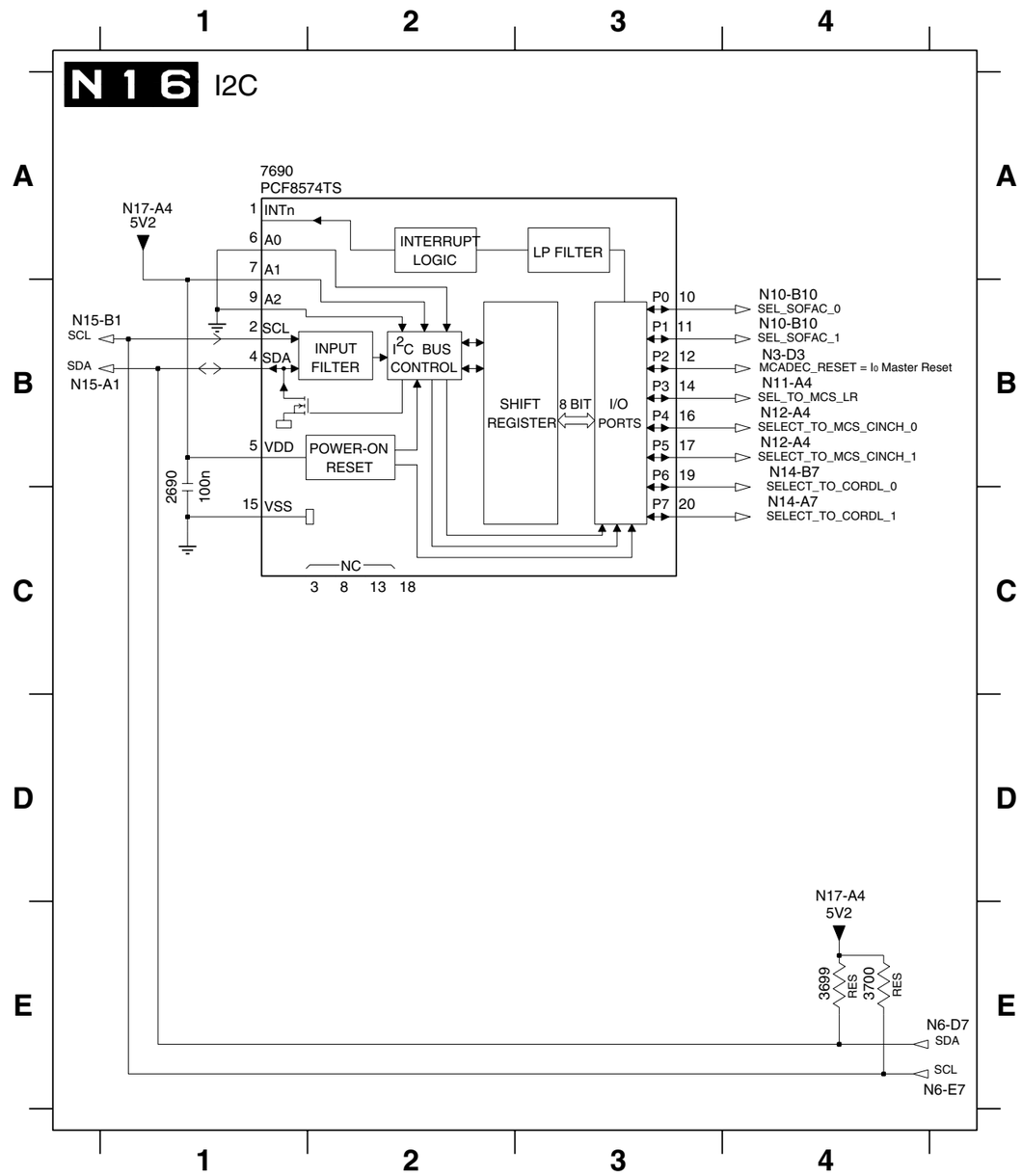

CL 96532042_027.eps
180599

Multi-Channel Sound Module: Power Supply

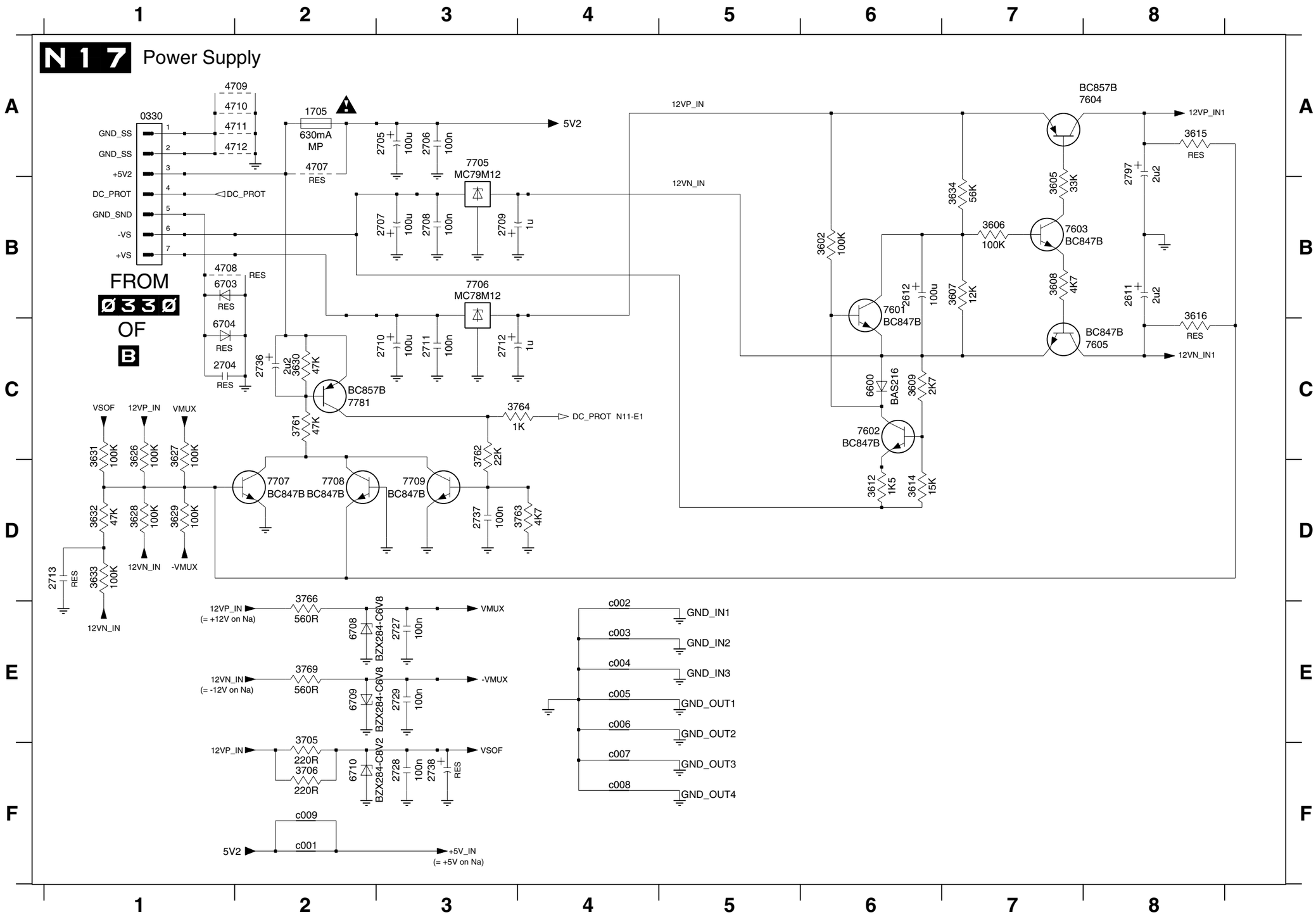

0330 A1	6709 E2
1705 A2	6710 F2
2611 B8	7601 B6
2612 B6	7602 C6
2704 C1	7603 B7
2705 A3	7604 A8
2706 A3	7605 C8
2707 B3	7705 A3
2708 B3	7706 B3
2709 B3	7707 D2
2710 C3	7708 D2
2711 C3	7709 D3
2712 C3	7781 C2
2713 D1	c001 F2
2727 E3	c002 E4
2728 F3	c003 E4
2729 E3	c004 E4
2736 C2	c005 E4
2737 D3	c006 E4
2738 F3	c007 F4
2797 A8	c008 F4
3602 B6	c009 F2
3605 B7	
3606 B7	
3607 B7	
3608 B7	
3609 C6	
3612 D6	
3614 D6	
3615 A8	
3616 C8	
3626 C1	
3627 C1	
3628 D1	
3629 D1	
3630 C2	
3631 C1	
3632 D1	
3633 D1	
3634 B7	
3705 F2	
3706 F2	
3761 C2	
3762 C3	
3763 D4	
3764 C4	
3766 E2	
3769 E2	
4707 A2	
4708 B1	
4709 A2	
4710 A2	
4711 A2	
4712 A2	
6600 C6	
6703 B1	
6704 C1	
6708 E2	

CL 96532042_028.eps
180599

Layout MCS Module (Inner Side)

0328 A3 1805 B5 2504 A1 2515 A5 2542 A2 2553 A1 2563 A2 2571 B1 2579 B1 2593 B2 2601 B2 2609 B2 2624 B2 2636 B2 2669 A3 2713 A5 2741 A1 2753 B1 2794 C2 2815 B4 2829 A5 2840 B3 2857 A3 2876 B4 2889 B4 3582 B1 3751 A1 4705 A5
0329 A5 1806 B5 2505 A1 2516 A5 2543 A2 2555 A1 2564 A2 2572 A2 2580 A3 2594 A2 2602 B2 2610 A3 2625 B1 2637 A2 2690 A5 2727 A4 2743 A1 2755 B1 2795 B2 2816 B4 2830 A5 2842 A4 2859 A3 2879 A3 2890 B4 3583 A1 3752 B1 4708 A4
0330 A4 1807 B5 2506 A1 2517 A5 2545 A2 2556 A2 2565 A2 2573 B1 2583 A1 2595 A2 2603 B2 2611 A3 2626 B2 2638 B3 2704 A4 2728 A4 2744 A1 2780 A2 2797 A4 2818 B4 2831 B5 2843 A4 2861 A3 2881 A3 2891 B4 3584 B1 3753 B1 4718 A5
0347 A3 1996 A5 2507 A2 2518 A5 2546 A2 2557 A4 2566 A2 2574 B1 2585 A3 2596 B2 2604 B1 2612 A4 2627 B1 2639 B2 2705 A4 2729 A5 2745 A1 2781 A3 2807 B5 2819 B4 2832 A5 2844 B3 2863 B4 2884 B4 2892 B5 3585 A2 3754 B1 4719 A5
0373 A2 1997 B1 2508 A1 2534 A1 2548 A4 2558 A4 2567 A2 2575 A2 2586 B1 2597 B2 2605 B2 2613 B1 2628 B2 2641 B3 2707 A4 2736 A4 2746 A1 2786 A2 2811 C4 2823 A5 2835 B4 2846 A3 2867 B4 2885 B5 2893 B5 3587 B2 3755 B1 4720 A5
0381 A1 1998 B1 2511 A2 2539 A2 2549 A2 2559 A4 2568 A2 2576 B1 2587 A3 2598 A2 2606 B2 2620 B2 2629 A3 2643 B2 2709 A5 2737 A5 2747 A1 2787 A3 2812 B4 2826 A5 2836 A5 2848 A4 2870 B4 2886 C4 2894 B5 3589 B2 3756 B1 4780 A3
1705 A4 2500 A1 2513 A5 2540 A2 2551 A4 2560 A2 2569 A1 2577 A1 2590 A1 2599 A3 2607 B2 2622 B2 2632 A3 2667 A3 2710 A4 2738 A5 2749 A1 2791 B3 2813 C4 2827 B5 2838 B5 2853 A3 2871 A4 2887 C4 2901 B3 3590 A1 3757 C1 4781 A2
1804 B4 2501 A1 2514 A5 2541 A2 2552 A4 2562 A2 2570 B2 2578 A3 2592 B1 2600 B2 2608 A3 2623 B1 2635 B1 2668 A3 2712 A3 2740 A1 2752 B1 2793 A2 2814 C4 2828 B5 2839 B5 2855 A4 2874 B4 2888 B4 2903 B4 3591 B2 3758 A1 4782 A3

2906 B3 3592 A3 3759 A1 5700 A5
2907 B3 3593 A2 3760 B1 5701 A5
2908 B3 3594 A2 3761 A5 5702 A5
2909 B5 3595 A2 3762 A5 5703 A5
3500 A1 3596 A3 3763 A5 5704 A5
3501 A1 3601 B2 3764 A5 5705 A5
3502 A1 3602 A3 3766 A5 6600 A3
3503 A1 3603 C2 3769 A5 6637 B2
3504 A1 3604 B1 3786 A3 6638 B2
3505 A2 3605 A3 3787 A3 6703 A4
3506 A2 3606 A4 3788 A2 6704 A4
3507 A2 3607 A3 3789 A2 6708 A5
3508 A2 3608 A3 3791 B2 6709 A5
3509 A1 3609 A3 3792 A4 6710 A4
3510 A1 3612 A3 3793 A4 6801 C5
3511 A2 3613 B1 3794 A3 7505 A1
3513 A1 3614 A3 3795 A2 7510 A2
3514 A1 3615 A4 3803 B5 7512 A2
3515 A2 3616 A4 3807 B4 7540 A2
3516 A2 3617 B1 3808 C4 7541 A4
3517 A2 3619 B1 3809 B4 7543 A3
3518 A2 3620 B2 3811 C4 7544 A3
3530 A1 3621 B1 3813 C4 7565 A2
3531 A1 3623 B2 3816 C4 7570 B1
3532 A1 3624 B2 3817 B5 7595 A2
3533 A1 3625 B2 3818 C4 7600 B2
3534 A1 3626 A5 3819 C4 7601 A3
3540 A3 3627 A5 3820 B4 7602 A3
3541 A2 3628 A5 3821 C4 7603 A4
3543 A2 3629 A5 3822 A5 7604 A4
3544 A2 3630 A5 3823 A5 7605 A3
3545 A2 3631 A5 3828 A5 7611 B2
3546 A4 3632 A5 3829 A5 7625 B2
3547 A4 3633 A5 3830 A5 7635 B1
3548 A3 3634 A4 3831 A5 7690 A5
3549 A1 3638 B2 3834 B5 7696 A2
3550 A4 3639 B2 3838 A5 7705 A4
3551 A4 3640 B2 3839 A5 7706 A4
3552 A4 3649 B2 3840 A5 7707 A5
3553 A2 3651 B2 3841 A4 7708 A5
3554 A4 3658 A3 3842 B5 7709 A5
3555 A3 3659 A3 3843 B5 7713 A5
3556 A2 3660 A2 3849 B5 7740 A1
3557 A2 3661 A2 3858 A4 7780 A2
3558 A3 3699 A5 3859 A4 7781 A5
3559 A2 3700 A5 3865 A4 7800 B3
3560 A2 3701 B2 3886 B5 7801 B4
3561 A2 3702 B2 3888 B5 7802 A5
3562 A3 3703 B2 3890 B4 7804 A4
3563 A2 3704 B2 3892 B5 7805 A3
3564 A2 3705 A4 3893 B5 7806 B4
3565 A2 3706 A4 3894 B5
3566 A3 3727 A3 4502 A5
3567 A3 3728 A3 4505 A2
3568 A3 3729 A3 4506 A1
3569 A3 3737 A3 4507 A1
3570 A2 3740 A1 4527 A2
3571 B1 3741 A1 4528 A2
3573 B1 3742 A1 4529 A5
3574 A3 3743 A1 4540 B2
3575 A3 3744 A1 4541 B2
3576 A3 3745 A1 4627 B2
3577 A5 3746 A1 4700 A5
3578 A5 3747 A1 4701 A5
3579 A2 3748 A1 4702 A5
3580 A2 3749 A1 4703 A5
3581 A2 3750 A1 4704 A5

Layout MCS Module (Outer Side)

2512 A4
2520 A3
2521 A3
2522 A3
2523 A3
2524 A3
2525 A3
2535 A4
2536 A4
2537 A4
2538 A4
2630 A1
2631 A1
2665 B4
2666 C4
2670 B5
2679 B4
2680 C4
2681 C4
2682 B4
2685 B4
2686 B5
2695 A4
2706 A1
2708 A2
2711 A2
2715 A5
2716 A5
2717 A5
2718 A5
2720 A5
2721 A5
2722 A5
2723 A5
2724 A5
2725 A5
2726 A5
2730 C5
2731 C5
2732 C5
2733 B5
2734 B5
2735 B5
2784 A3
2800 B1
2802 B1
2809 B1
2810 B2
2817 B2
2820 B2
2821 B2
2822 B2
2824 B2
2825 B1
2833 B1
2834 B1
2837 A1
2841 B3
2845 B3
2847 A2
2849 B2
2850 A2
2851 A2
2852 A2
2854 A3
2856 A2
2858 A2
2860 B3
2862 A3
2864 B2
2865 B2
2866 B2
2868 B2
2869 B2
2872 A1
2873 B2
2875 A2
2877 A2
2878 B2
2880 B3
2882 A3
2883 A2
2900 B3
2904 B3
2905 B3
3525 A3
3526 A3
3527 A3
3535 A4
3536 A4
3537 A4
3538 A4
3539 A4
3542 A4
3572 A4
3598 A4
3599 A4
3600 A4
3610 A1
3611 A1
3645 C4
3646 C4
3647 C4
3648 C4
3650 C4
3652 C4
3653 B4
3655 B4
3663 C4
3664 B4
3667 B4
3670 B5
3671 A4
3673 A4
3675 B4
3676 B4
3678 B4
3679 C4
3680 B4
3682 C4
3683 C4
3684 C4
3685 C4
3686 C4
3687 B4
3688 C4
3689 C4
3707 A5
3708 A5
3709 A5
3710 B5
3711 B4
3712 B5
3713 B4
3715 A5
3716 A5
3717 A5
3718 A5
3719 A5
3720 A5
3721 A5
3722 A5
3724 A5
3725 A5
3726 A5
3730 C5
3731 C5
3732 B5
3733 B5
3734 B5
3735 B5
3738 A5
3739 A5
3780 A3
3781 A3
3782 A4
3784 A3
3785 A4
3790 A4
3796 A3
3797 A3
3799 A1
3800 B1
3801 B1
3804 B2
3805 B2
3810 B2
3812 B2
3814 B2
3815 B2
3824 B1
3825 B1
3826 B1
3827 B1
3835 A1
3836 B1
3837 B1
3844 B1
3848 B1
3850 A2
3851 B3
3852 A2
3854 B2
3855 B3
3856 A2
3857 A2
3861 A2
3863 B2
3864 A2
3866 B2
3868 A3
3869 A3
3870 A2
3871 A2
3872 A3
3873 A3
3874 A3
3875 A3
3876 B2
3877 B2
3878 A2
3879 A2
3880 A2
3881 B2
3882 A3
3883 A3
3884 A3
3885 B3
3889 B3
3891 B1
3895 A1
3896 A1
4500 A4
4501 A4
4503 A5
4520 A3
4522 A3
4526 A4
4633 A4
4634 A2
4635 A1
4685 A4
4686 A4
4687 A4
4688 A4
4707 A2
4709 A2
4710 A2
4711 A2
4712 A2
4715 A1
4716 A2
4717 A2
4783 A3
4784 A3
5801 B2
6525 A4
6715 A5
6716 A5
6717 A5
6718 A5
6719 A5
6720 A5
6721 A5
6722 A5
6723 A5
6724 A5
6725 A5
6726 A5
6727 A5
6730 C5
6731 C5
6732 B5
6733 B5
6734 B5
6735 B5
6736 B5
7520 A3
7535 A4
7610 A1
7630 A1
7665 B4
7667 B4
7675 B4
7679 B4
7685 B5
7695 A4
7710 A5
7712 A5
7803 B1
7807 B1

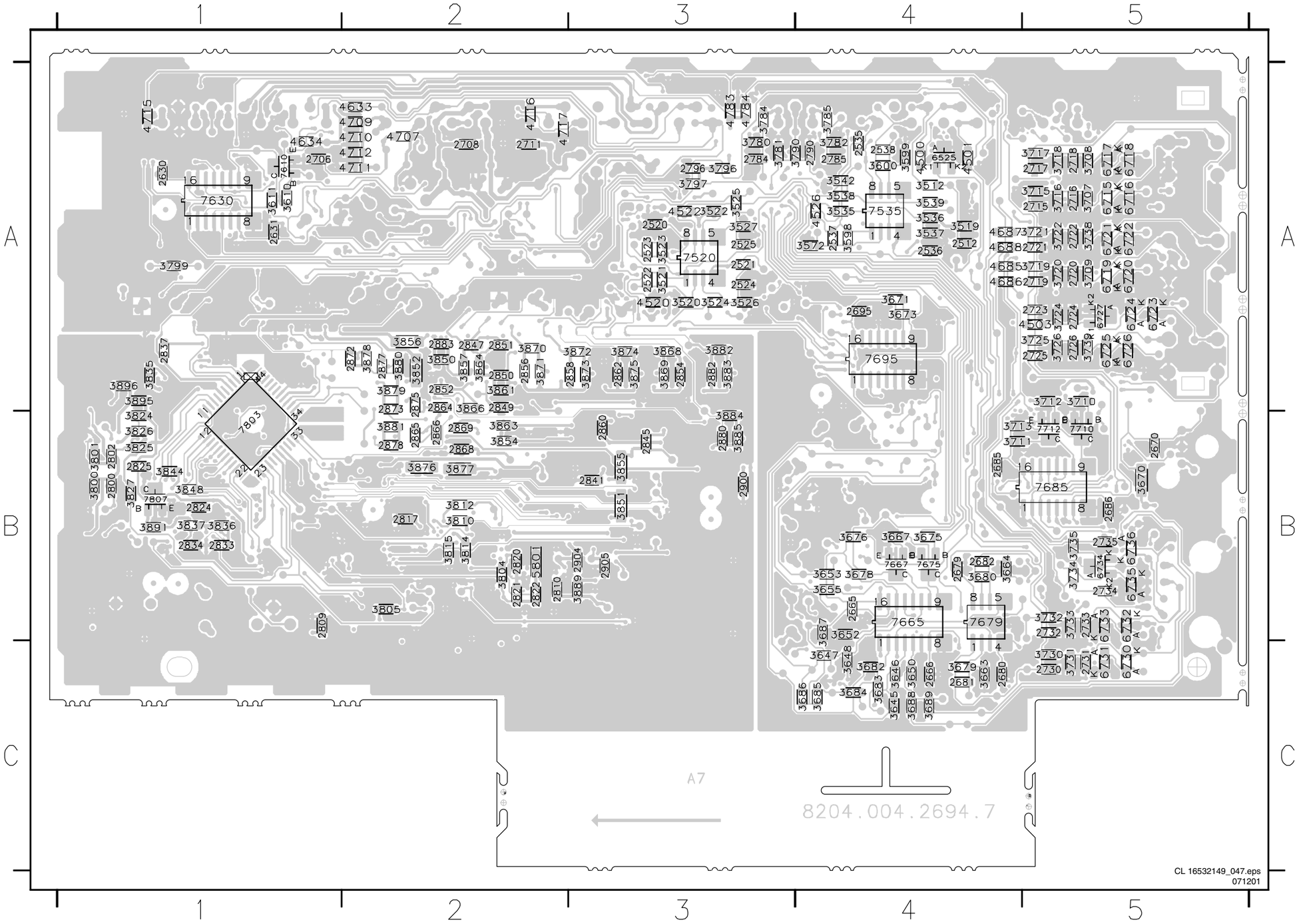

Side I/O Panel: FL11

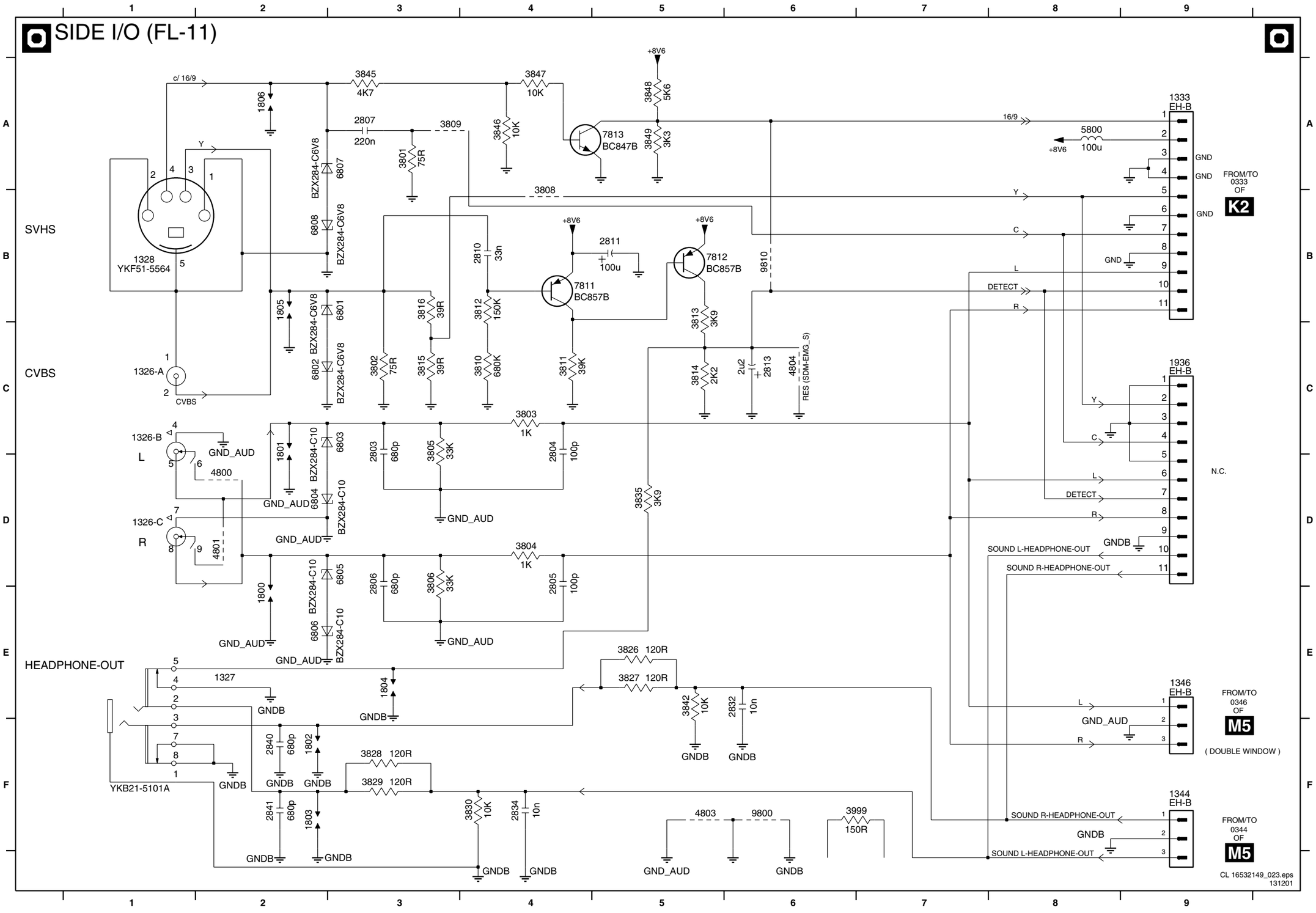

1326-A C1
1326-B C1
1326-C D1
1327 E2
1328 B1
1333 A9
1344 F9
1346 E9
1800 E2
1801 C2
1802 F2
1803 F2
1804 E3
1805 B2
1806 A2
1936 C9
2803 C3
2804 C4
2805 D4
2806 D3
2807 A3
2810 B4
2811 B5
2813 C6
2832 E6
2834 F4
2840 F2
2841 F2
3801 A3
3802 C3
3803 C4
3804 D4
3805 C3
3806 D3
3808 B4
3809 A3
3810 C4
3811 C4
3812 B4
3813 B5
3814 C5
3815 C3
3816 B3
3826 E5
3827 E5
3828 F3
3829 F3
3830 F4
3835 D5
3842 E5
3845 A3
3846 A4
3847 A4
3848 A5
3849 A5
3999 F7
4800 D2
4801 D2
4803 F5
4804 C6
5800 A8
6801 B3
6802 C2
6803 C3
6804 D2
6805 D3
6806 E2
6807 A3
6808 B2
7811 B4
7812 B5
7813 A5
9800 F6
9810 B6

Layout Side I/O Panel

Top View

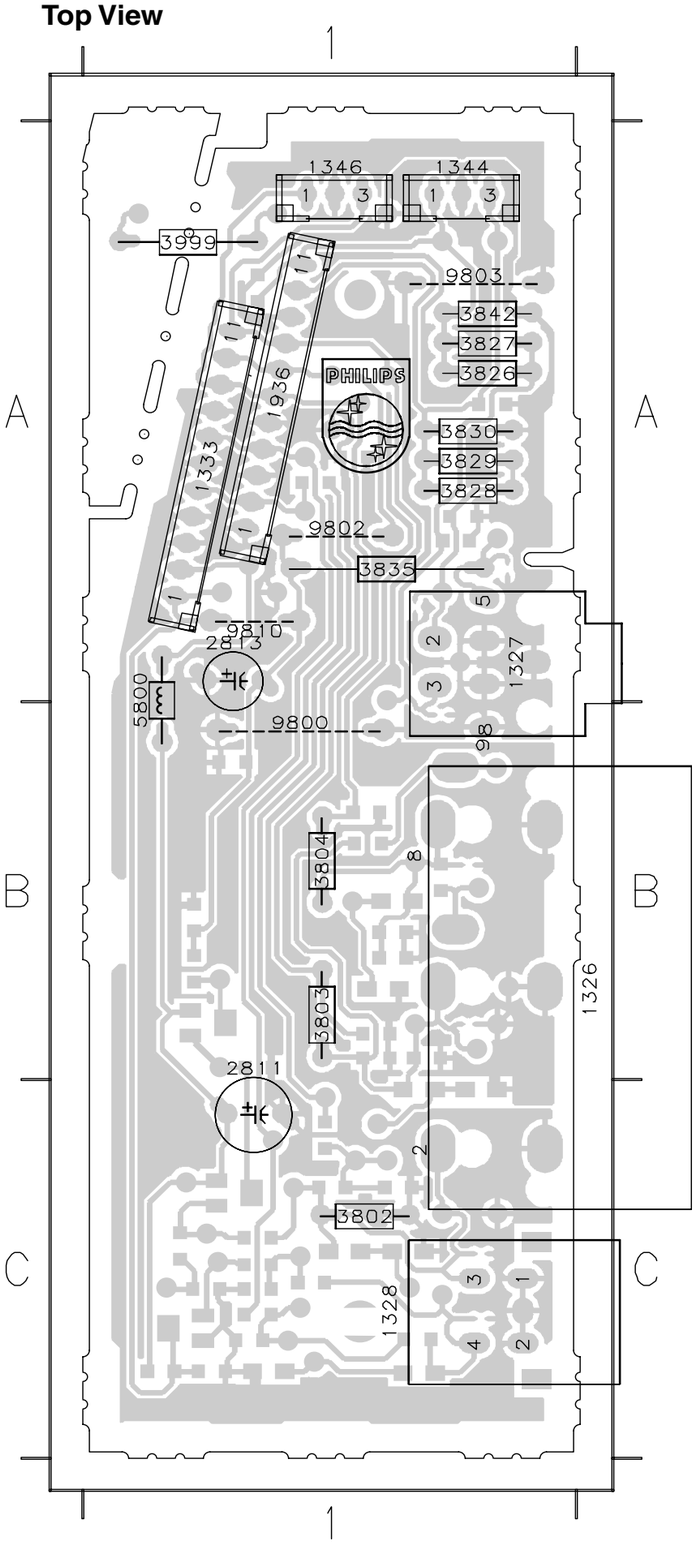

1326 B1
1327 A1
1328 C1
1333 A1
1344 A1
1346 A1
1936 A1
2811 B1
2813 A1
3802 C1
3803 B1
3804 B1
3826 A1
3827 A1
3828 A1
3829 A1
3830 A1
3835 A1
3842 A1
3999 A1
5800 A1
9800 B1
9802 A1
9803 A1
9810 A1

Bottom View

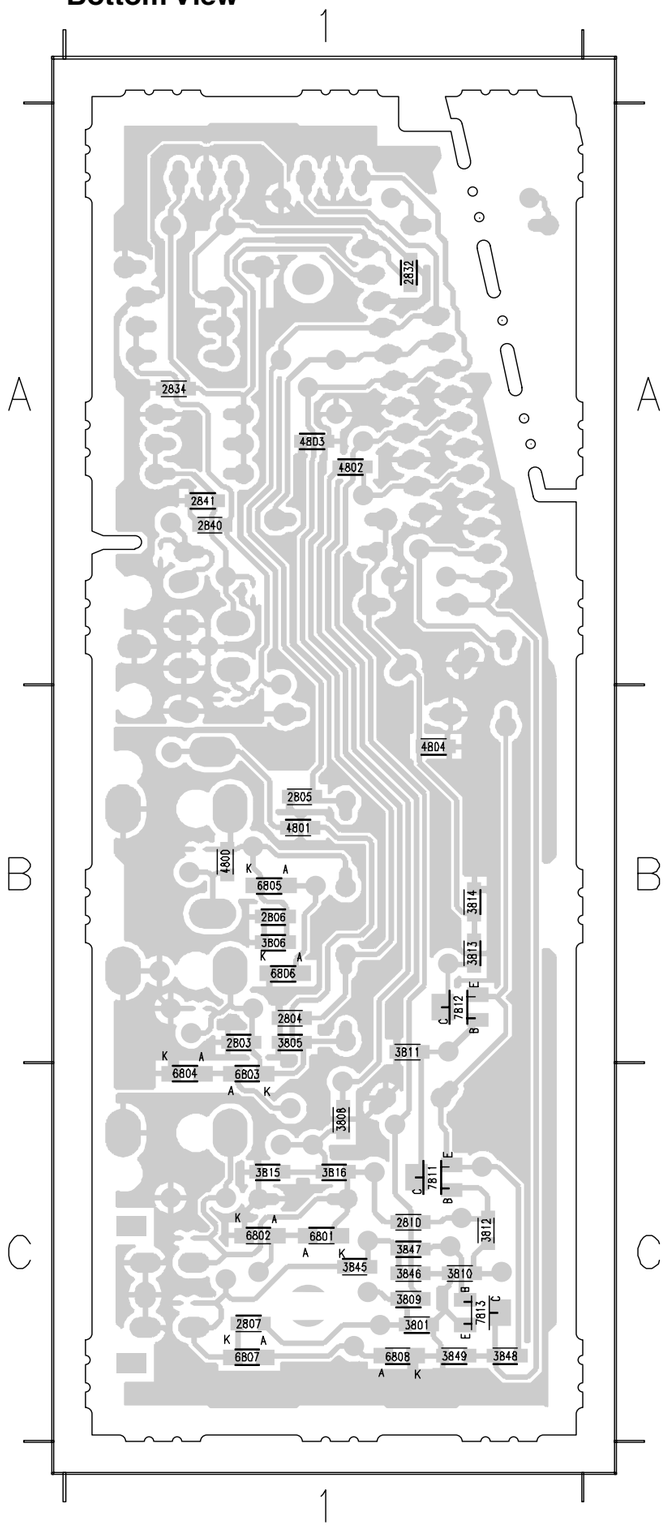

2803 B1
2804 B1
2805 B1
2806 B1
2807 C1
2810 C1
2832 A1
2834 A1
2840 A1
2841 A1
3801 C1
3805 B1
3806 B1
3808 C1
3809 C1
3810 C1
3811 B1
3812 C1
3813 B1
3814 B1
3815 C1
3816 C1
3845 C1
3846 C1
3847 C1
3848 C1
3849 C1
4800 B1
4801 B1
4802 A1
4803 A1
4804 B1
6801 C1
6802 C1
6803 B1
6804 C1
6805 B1
6806 B1
6807 C1
6808 C1
7811 C1
7812 B1
7813 C1

CL 16532149_048.eps
201201

Top Control Panel

0345 A4	1703 D3	3002 E1	3006 E2	3010 D3	3999 D4	4004 E3
0346 B4	1704 D3	3003 E1	3007 E2	3011 E3	4001 D2	4005 C3
1701 D1	1705 D2	3004 E1	3008 D2	3012 C3	4002 E3	4006 C3
1702 D1	3001 E1	3005 E2	3009 E3	3013 C3	4003 D3	6005 E2

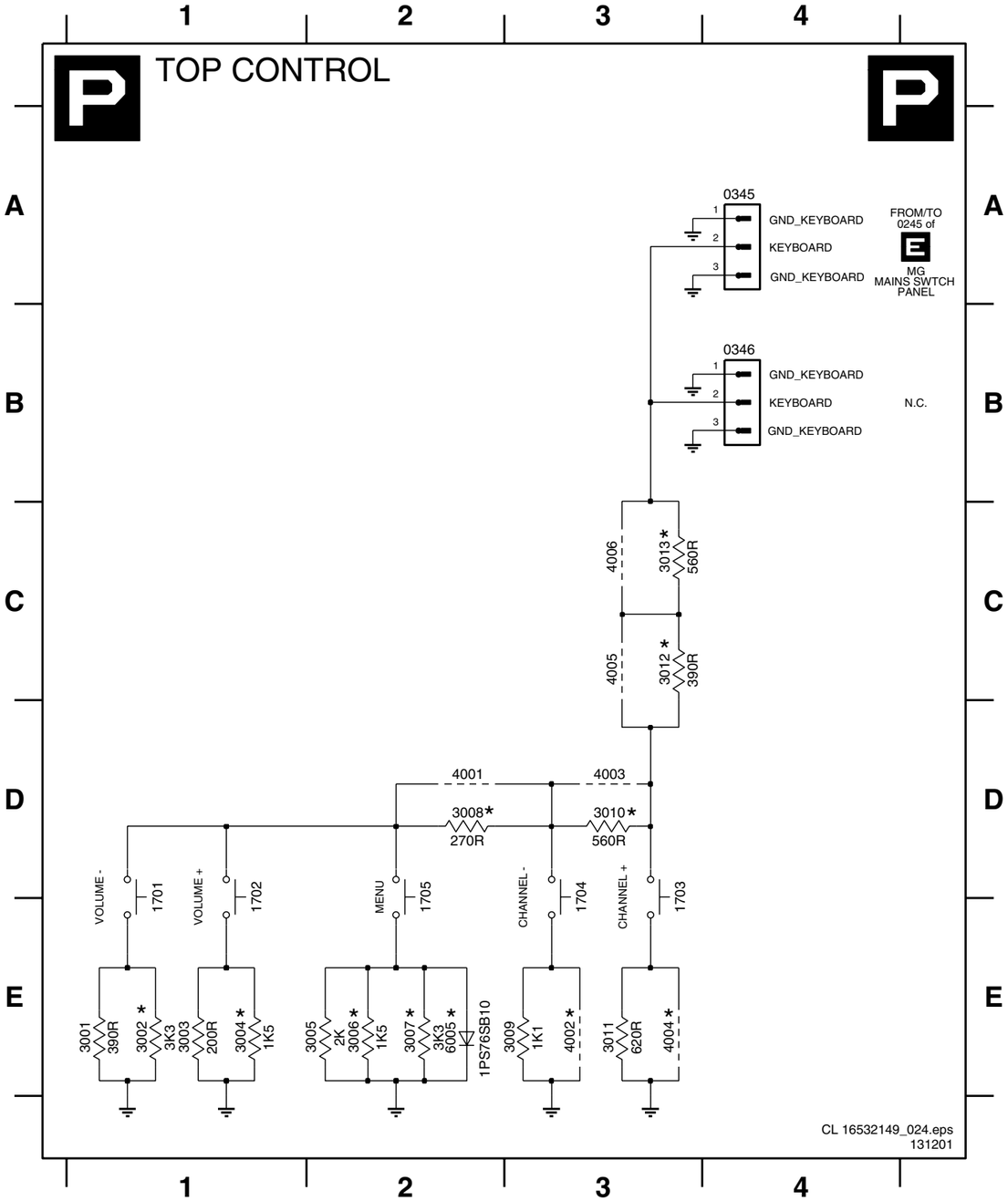

Layout Top Control Panel

Top View

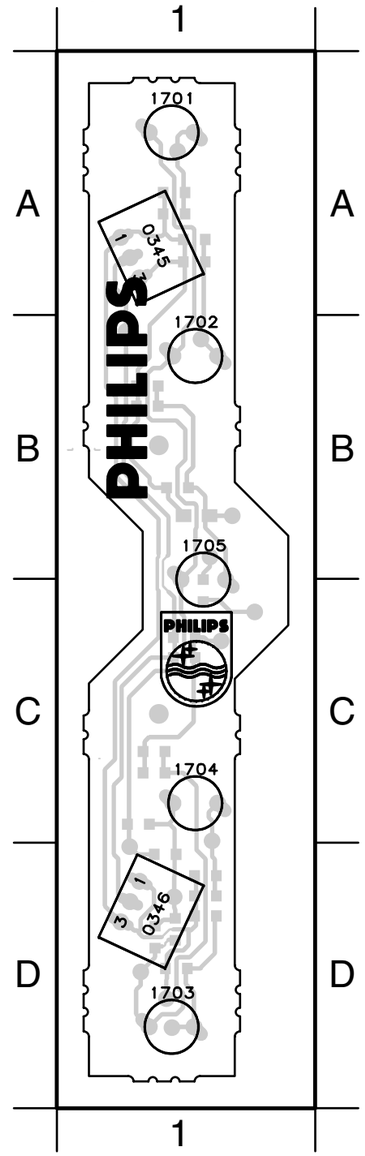

0345	A1
0346	D1
1701	A1
1702	A1
1703	D1
1704	C1
1705	B1

Bottom View

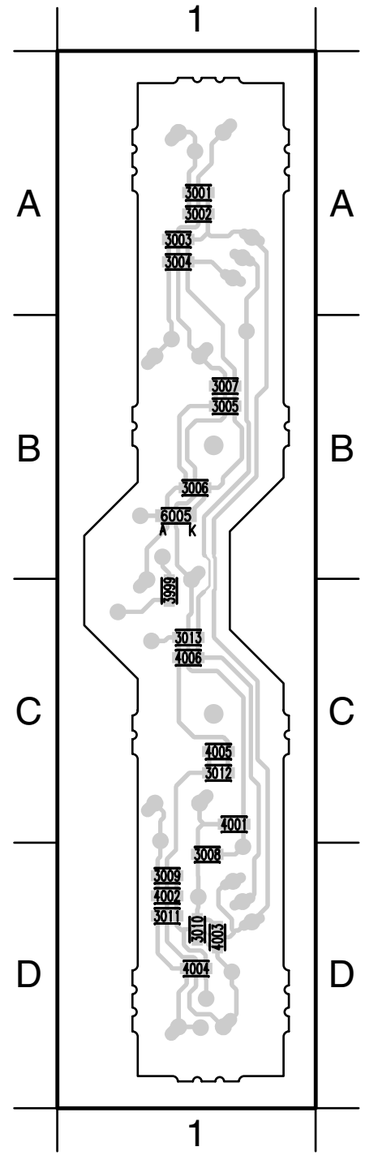

3001	A1
3002	A1
3003	A1
3004	A1
3005	B1
3006	B1
3007	B1
3008	D1
3009	D1
3010	D1
3011	D1
3012	C1
3013	C1
3999	C1
4001	C1
4002	D1
4003	D1
4004	D1
4005	C1
4006	C1
6005	B1

CL 16532149_049.eps
201201

Wireless Transmitter

1002 A15	2106 B3	2115 C7	2124 A9	2133 C10	2143 E12	2156 E9	2167 H3	2179 G15	2189 H4	3104 A3	3113 B4	3122 A8	3131 D8	3140 A11	3152 D12	3161 G4	3171 E8	3189 G14	3200 G7	3211 H9	5106 A15	7101-B A6	7109-A E13	7115-B G12	F103 A1	F113 D11	F125 B15	F151 C15
1101 A1	2107 D3	2116 A4	2125 C9	2134 B10	2144 E13	2157 E9	2168 D14	2180 H8	2190 A15	3105 C3	3114 A5	3123 C8	3132 B10	3141 C11	3153 E12	3162 F5	3172 E8	3190 G8	3201 C6	3212 G10	5107 E9	7101-C A4	7109-B D12	7116 G14	F105 B1	F114 D9	F127 G7	F152 D11
1102 A13	2108 B3	2117 B8	2126 C7	2135 D10	2147 A14	2158 E8	2169 D14	2181 A10	2191 D12	3106 A3	3115 C5	3124 A8	3133 D10	3142 E10	3154 E12	3163 G5	3173 G3	3191 G8	3202 A6	3213 G10	6101 D8	7101-D C4	7110 E9	7117 E11	F106 B2	F115 E9	F128 E14	F153 H12
2100 A2	2109 D3	2118 B8	2127 D8	2136 A10	2150 F6	2161 H11	2170 D11	2182 C10	2192 G11	3107 C3	3116 A5	3125 C8	3134 B10	3143 E11	3155 E13	3164 G5	3176 G3	3193 H2	3203 H10	4133 B15	6102 E7	7102 B8	7112 F1	7118 E12	F107 B1	F118 E9	F129 C13	F154 H11
2101 C2	2110 B5	2119 D8	2128 B7	2137 C3	2151 H4	2162 H12	2172 E10	2183 G10	2193 H10	3108 B3	3117 C5	3126 A9	3135 C10	3144 C11	3156 E13	3165 G5	3177 H3	3194 B15	3204 G10	5101 H5	6106 G4	7103-A A10	7113-A B12	7119 G8	F108 G15	F119 E8	F130 C13	F155 F2
2102 A3	2111 D5	2120 B7	2129 B7	2138 E11	2152 H5	2163 H14	2173 E10	2185 G13	3100 A2	3109 D3	3118 B6	3127 C9	3136 B10	3145 E11	3157 D13	3166 G5	3182 H11	3196 F7	3205 G15	5102 A15	6107 G13	7103-B B10	7113-B C12	7120 H10	F109 C4	F120 E7	F131 H7	F156 E5
2103 C3	2112 A6	2121 C7	2130 B7	2139 D12	2153 E7	2164 H3	2175 D2	2186 G13	3101 C2	3110 B3	3119 D6	3128 C7	3137 C10	3146 D10	3158 C13	3168 E7	3184 G11	3197 F7	3206 G12	5103 C15	6108 B15	7105 F5	7113-C A12	7100 A11	F110 C6	F122 E4	F132 H7	F157 E10
2104 A3	2113 C6	2122 C7	2131 C7	2141 D11	2154 F8	2165 H4	2176 B2	2187 H13	3102 B2	3111 C3	3120 B6	3129 D9	3138 A11	3150 E11	3159 C13	3169 F7	3185 H12	3198 C14	3207 H13	5104 A15	6109 B15	7106 D8	7114 F8	F101 A6	F111 B10	F123 E4	F133 H4	F158 G3
2105 C3	2114 A7	2123 C7	2132 A10	2142 D13	2155 E8	2166 F2	2178 E9	2188 E7	3103 D2	3112 B3	3121 D6	3130 C7	3139 C11	3151 D12	3160 G4	3170 E8	3188 G14	3199 E5	3210 H9	5105 C15	7101-A C6	7108 G3	7115-A G11	F102 A9	F112 D14	F124 A14	F150 A15	

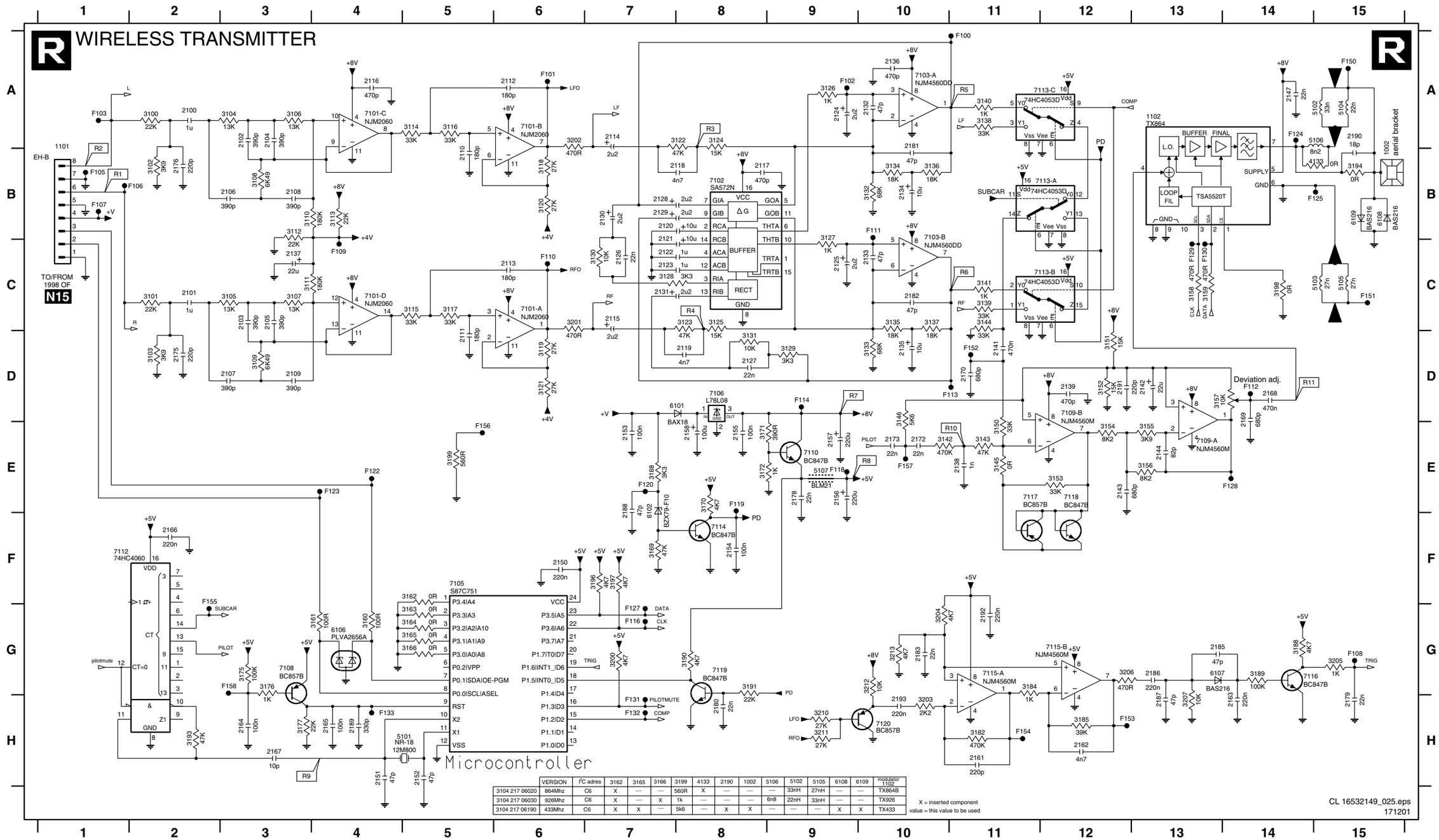

VERSION	I²C adres	3162	3165	3166	3199	4133	2190	1002	5106	5102	5105	6108	6109	modulator 1102
3104 217 06020	864Mhz	C6	X	—	—	560R	X	—	—	—	33nH	27nH	—	—	TX864B
3104 217 06030	926Mhz	C6	X	—	X	1k	—	—	—	6n8	22nH	33nH	—	—	TX926
3104 217 06190	433Mhz	C6	X	X	—	5k6	—	X	X	—	—	—	X	X	TX433

X = inserted component
value = this value to be used

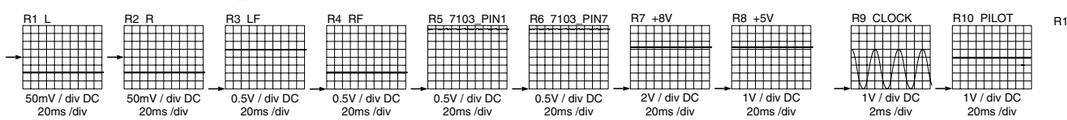

R11 1102_PIN4

Layout Wireless Transmitter

Top View

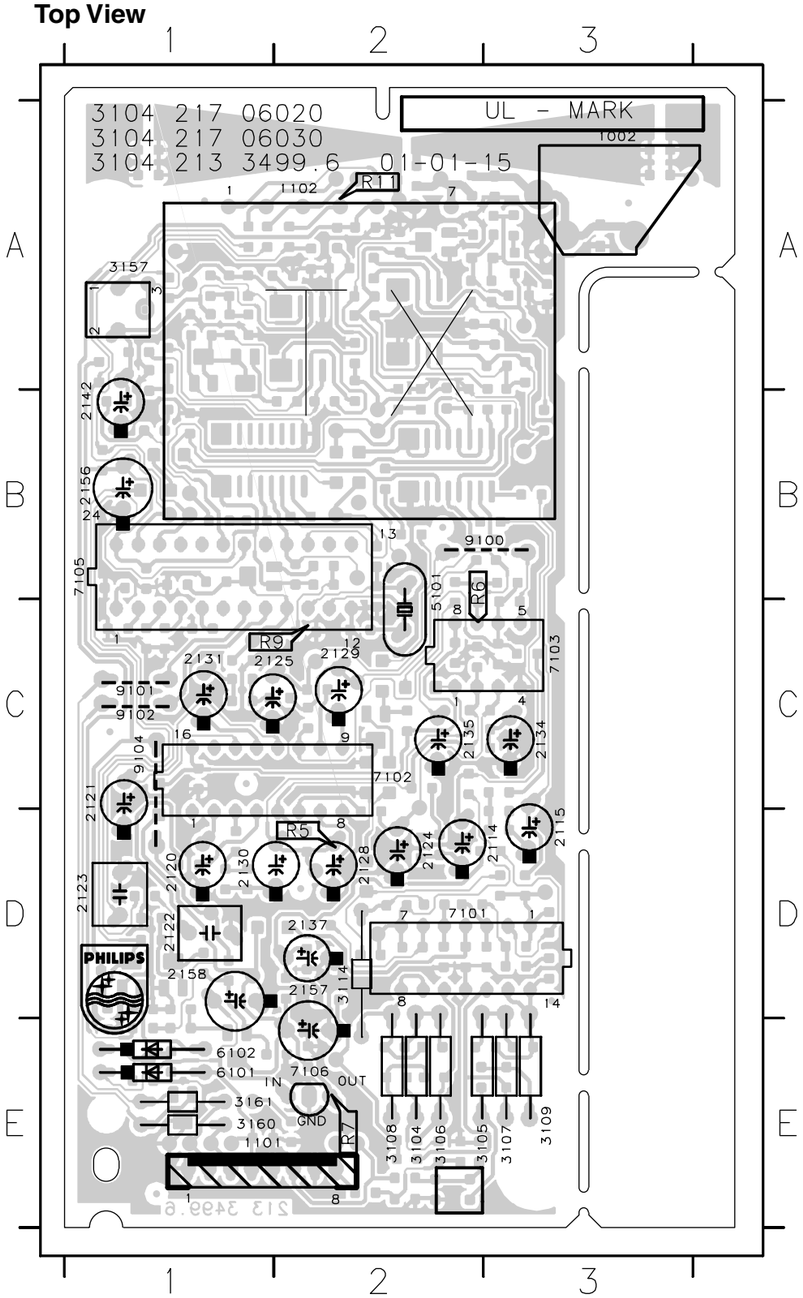

1002	A3						
1101	E1						
1102	A2						
2114	D3						
2115	D3						
2120	D1						
2121	C1						
2122	D1						
2123	D1						
2124	D2						
2125	C1						
2128	D2						
2129	C2						
2130	D1						
2131	C1						
2134	C3						
2135	C2						
2137	D2						
2142	B1						
2156	B1						
2157	D2						
2158	D1						
3104	E2						
3105	E2						
3106	E2						
3107	E3						
3108	E2						
3109	E3						
3114	D2						
3157	A1						
3160	E1						
3161	E1						
5101	B2						
6101	E1						
6102	E1						
7101	D2						
7102	C2						
7103	C3						
7105	B1						
7106	E2						
9100	B3						
9101	C1						
9102	C1						
9104	C1						

Bottom View

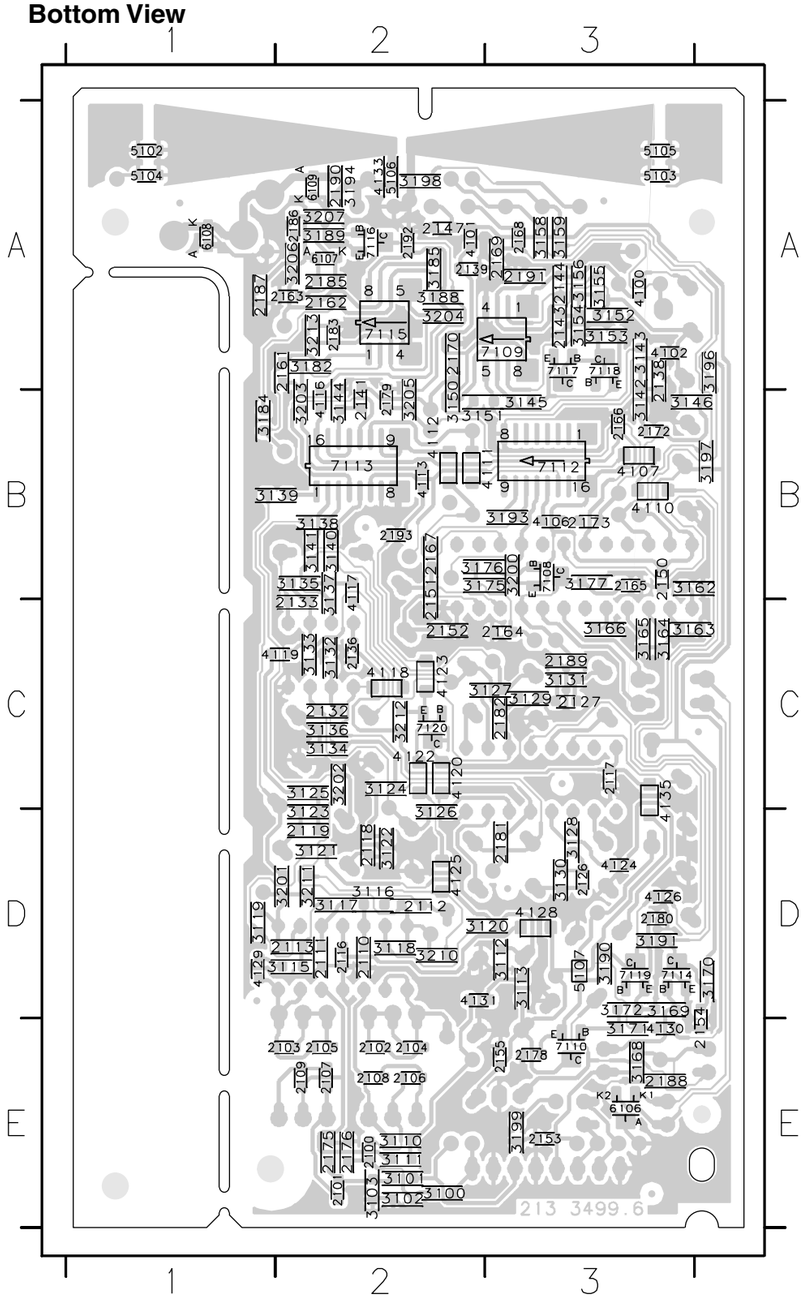

2100	E2	2190	A2	3170	D3	5106	A2
2101	E2	2191	A2	3171	E3	5107	D3
2102	E2	2192	A2	3172	D3	6106	E3
2103	E1	2193	B2	3175	B2	6107	A1
2104	E2	3100	E2	3176	B2	6108	A1
2105	E1	3101	E2	3177	B3	6109	A1
2106	E2	3102	E2	3182	A1	7108	B3
2107	E2	3103	E2	3184	B1	7109	A2
2108	E2	3110	E2	3185	A2	7110	E3
2109	E1	3111	E2	3188	A2	7113	B2
2110	D2	3112	D2	3189	A1	7114	D3
2111	D1	3113	D2	3190	D3	7115	A2
2112	D2	3115	D1	3191	D3	7116	A2
2113	D1	3116	D2	3193	B2	7117	A3
2116	D2	3117	D2	3194	A2	7118	A3
2117	C3	3118	D2	3196	A3	7119	D3
2118	D2	3119	D1	3197	B3	7120	C2
2119	D1	3120	D2	3198	A2	7112	B3
2126	D3	3121	D1	3199	E2	F100	D2
2127	C3	3122	D2	3201	D1	F101	D2
2132	C2	3123	D1	3202	C2	F102	C2
2133	C1	3124	C2	3203	B1	F103	E2
2136	C2	3125	C1	3204	A2	F105	E3
2138	A3	3126	D2	3205	B2	F106	E2
2139	A2	3127	C2	3206	A1	F107	E3
2141	B2	3128	D3	3207	A1	F108	B2
2143	A3	3129	C2	3210	D2	F109	E2
2144	A3	3130	D3	3211	D1	F110	D1
2147	A2	3131	C3	3212	C2	F111	C2
2150	B3	3132	C2	3213	A1	F112	A3
2151	B2	3133	C1	3200	B2	F113	C2
2152	C2	3134	C2	4100	A3	F114	D3
2153	E3	3135	B1	4101	A2	F116	B3
2154	E3	3136	C2	4102	A3	F118	D3
2155	E2	3137	B2	4106	B3	F119	B2
2161	A1	3138	B1	4107	B3	F120	E3
2162	A2	3139	B1	4110	B3	F122	E3
2163	A1	3140	B2	4112	B2	F123	E3
2164	C2	3141	B1	4117	B2	F124	A2
2165	B3	3142	B3	4118	C2	F125	A2
2166	B3	3143	A3	4119	C1	F127	B3
2167	B2	3144	B2	4120	C2	F128	A3
2168	A2	3145	B2	4122	C2	F129	A2
2169	A2	3146	B3	4123	C2	F130	A2
2170	A2	3150	B2	4124	D3	F131	B2
2172	B3	3151	B2	4125	D2	F132	B2
2173	B3	3152	A3	4126	D3	F133	C3
2175	E2	3153	A3	4128	D3	F150	A1
2176	E2	3154	A3	4129	D1	F151	A3
2178	E2	3155	A3	4130	E3	F152	B2
2179	B2	3156	A3	4131	D2	F153	A1
2180	D3	3158	A3	4133	A2	F154	B1
2181	D2	3159	A3	4135	C3	F155	B2
2182	C2	3162	B3	4111	B2	F156	E3
2183	A2	3163	C3	4113	B2	F157	B3
2185	A2	3164	C3	4116	B1	F158	C2
2186	A1	3165	C3	5102	A1		
2187	A1	3166	C3	5103	A3		
2188	E3	3168	E3	5104	A1		
2189	C3	3169	D3	5105	A3		

CL 16532149_052.eps
201201

Auto SCAVEM

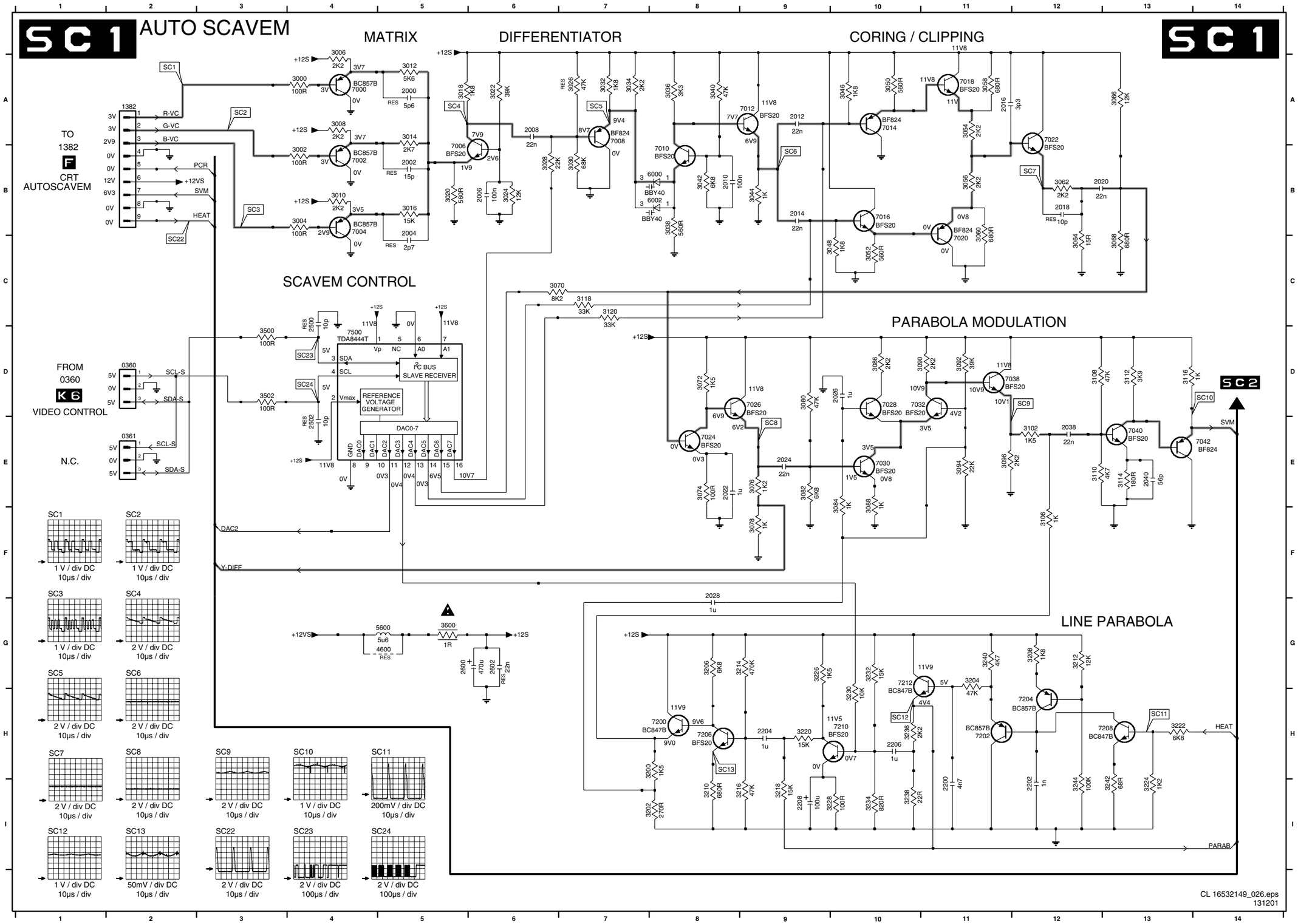

0360 D2	3212 G12
0361 E2	3214 G9
1382 A2	3216 I9
2000 A5	3218 I9
2002 B5	3220 H9
2004 B5	3222 H13
2006 B6	3224 I13
2008 A6	3226 G9
2010 B8	3228 I10
2012 A9	3230 H10
2014 B9	3232 G10
2016 A11	3234 I10
2018 B12	3236 H10
2020 B12	3238 I10
2022 E8	3240 G11
2024 E9	3242 I13
2026 D10	3244 I12
2028 F8	3500 D3
2038 E12	3502 D3
2040 E13	3600 G5
2200 I11	3999 H5
2202 I12	4600 G5
2204 H9	5600 G5
2206 H10	6000 B8
2208 I9	6002 B8
2500 C4	7000 A4
2502 E4	7002 B4
2600 G5	7004 B4
2602 G6	7006 B5
3000 A4	7008 A7
3002 B4	7010 B8
3004 B4	7012 A9
3006 A4	7014 A10
3008 A4	7016 B10
3010 B4	7018 A11
3012 A5	7020 B11
3014 A5	7022 A12
3016 B5	7024 E8
3018 A5	7026 D9
3020 B5	7028 D10
3022 A6	7030 E10
3024 B6	7032 D11
3026 A7	7038 D11
3028 B6	7040 E13
3030 B7	7042 E14
3032 A7	7200 H8
3034 A7	7202 H11
3036 A8	7204 H12
3038 B8	7206 H8
3040 A8	7208 H13
3042 B8	7210 H10
3044 B9	7212 G10
3046 A10	7500 D4
3048 C10	
3050 A10	
3052 C10	
3054 A11	
3056 B11	
3058 A11	
3060 B11	
3062 B12	
3064 C12	
3066 A13	
3068 C13	
3070 C6	
3072 D8	
3074 E8	
3076 E9	
3078 F9	
3080 D9	
3082 E9	
3084 E10	
3086 D10	
3088 E10	
3090 D11	
3092 D11	
3094 E11	
3096 E11	
3102 E12	
3106 F12	
3108 D12	
3110 E12	
3112 D13	
3114 E13	
3116 D13	
3118 C7	
3120 C7	
3200 H8	
3202 I8	
3204 G11	
3206 G8	
3208 G12	
3210 I8	

Auto SCAVEM

2300 B5	2410 E5	2420 E8	3304 A6	3316 A7	3326 B8	3404 E2	3420 E4	3430 D5	3440 D7	3450 E8	3460 E9	7402 D3	7416 E6
2302 B6	2412 E5	2422 E9	3306 B6	3318 B7	3328 B9	3406 D3	3422 D4	3432 E5	3442 E7	3452 D8	7300 A5	7408 D4	7418 D7
2304 B7	2414 E6	2424 D9	3308 A6	3320 B7	3330 A9	3408 E3	3424 D4	3434 E5	3444 D7	3454 E8	7302 B6	7410 D5	7420 D8
2306 A8	2416 E7	3300 B5	3310 B6	3322 A8	3400 E2	3410 D3	3426 E4	3436 D6	3446 E7	3456 E9	7304 A8	7412 E4	7422 D9
2400 D2	2418 D8	3302 B5	3312 B7	3324 A8	3402 D2	3418 D4	3428 C5	3438 E6	3448 D8	3458 D9	7400 D2	7414 D6	

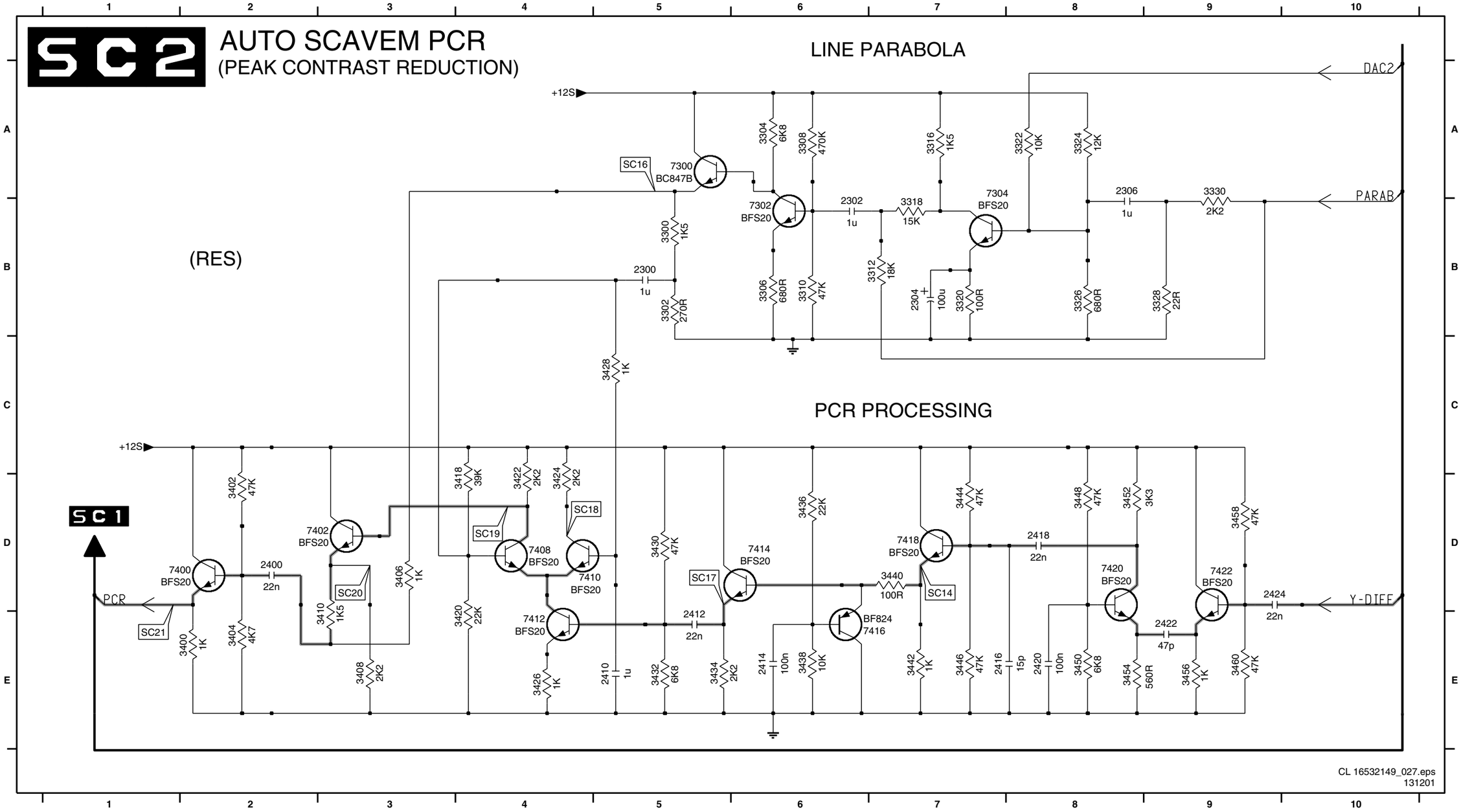

Layout Auto SCAVEM (Top View)

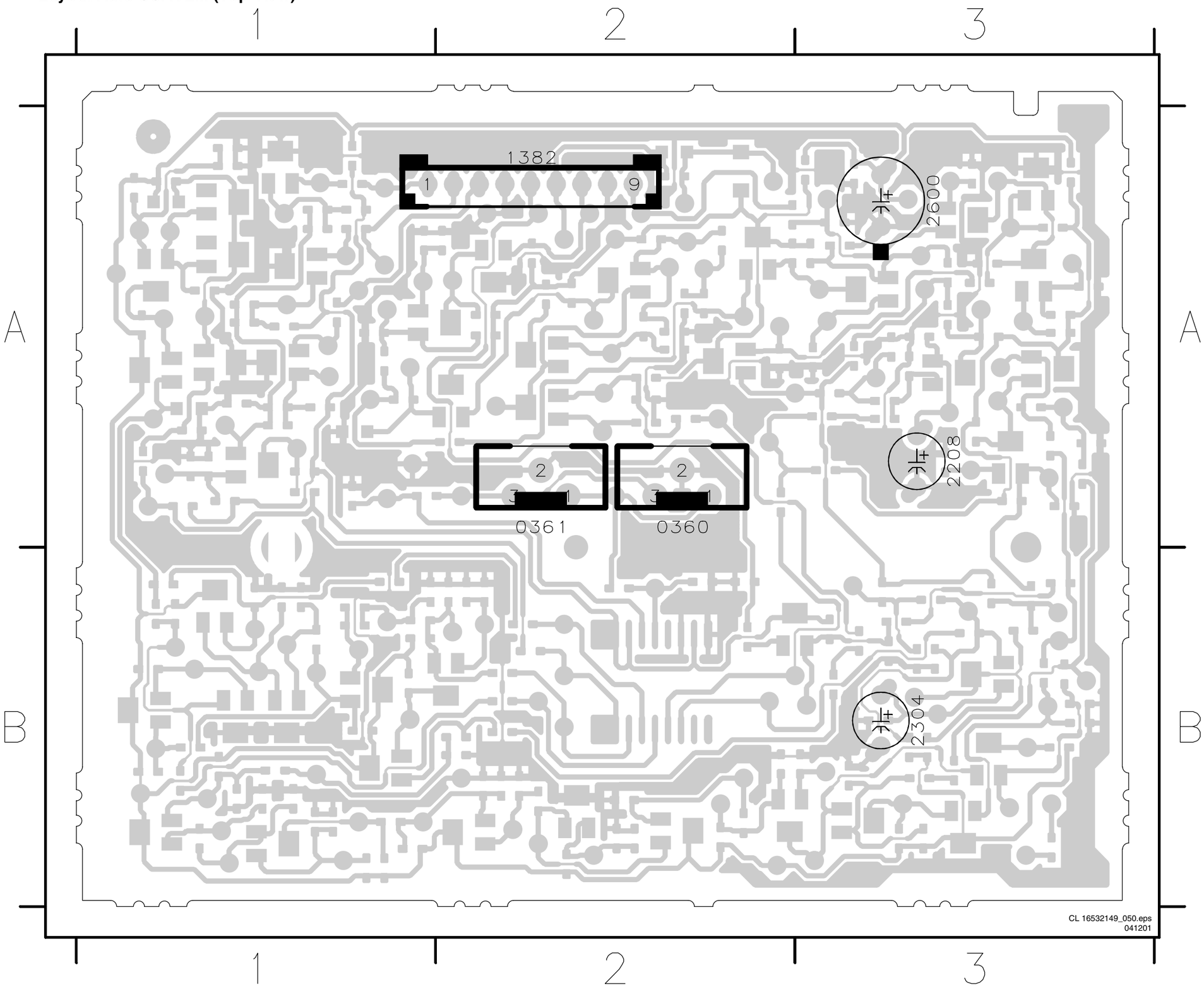

0360	A2
0361	A2
1382	A2
2208	A3
2304	B3
2600	A3

Layout Auto SCAVEM (Bottom View)

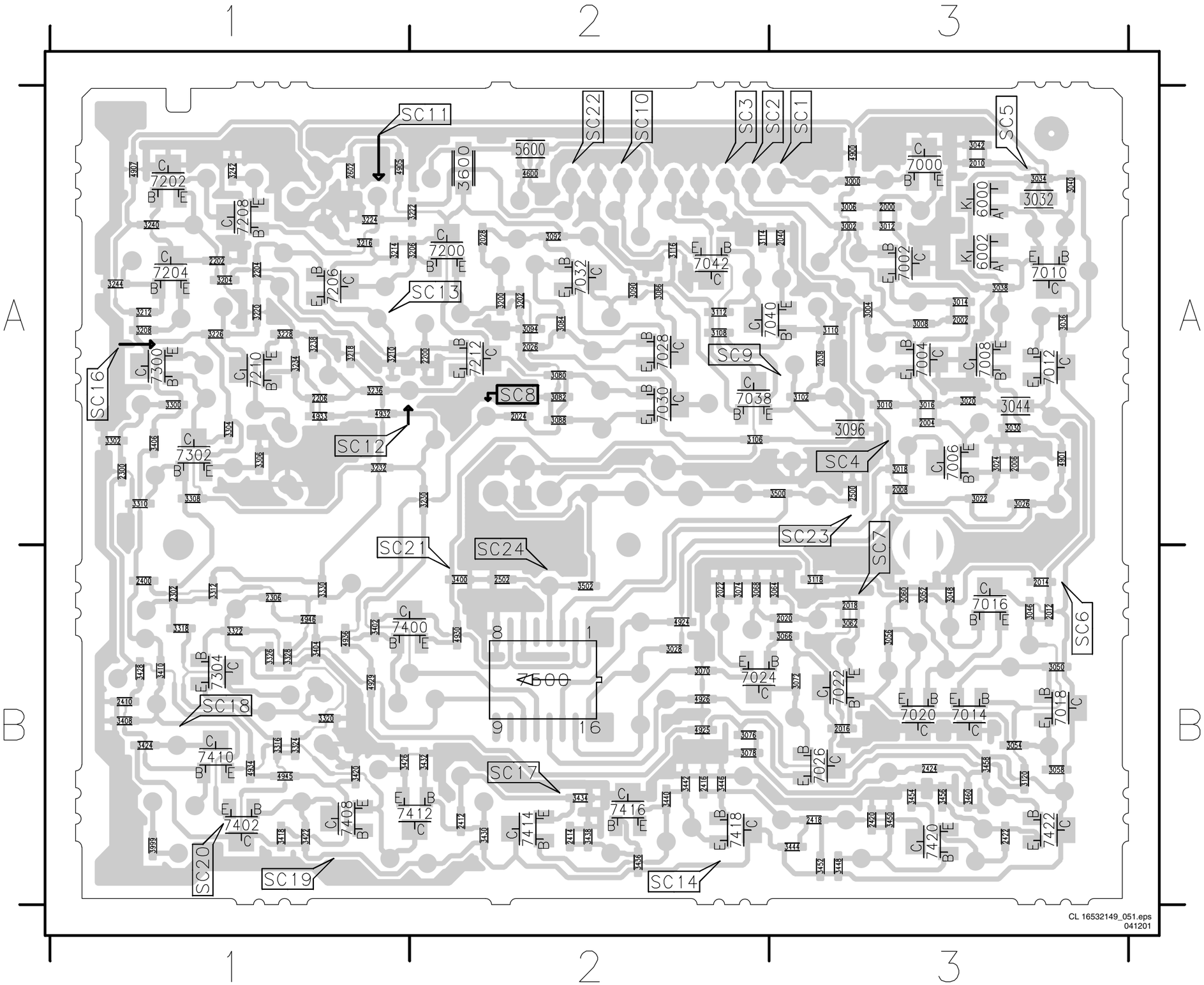

2000	A3	3078	B2	3442	B2
2002	A3	3080	A2	3444	B3
2004	A3	3082	A2	3446	B2
2006	A3	3084	A2	3448	B3
2008	A3	3086	A2	3450	B3
2010	A3	3088	A2	3452	B3
2012	B3	3090	A2	3454	B3
2014	B3	3092	A2	3456	B3
2016	B3	3094	A2	3458	B3
2018	B3	3096	A3	3460	B3
2020	B3	3102	A3	3500	A3
2022	B2	3106	A2	3502	B2
2024	A2	3108	A2	3600	A2
2026	A2	3110	A3	3999	B1
2028	A2	3112	A2	4600	A2
2038	A3	3114	A2	4900	A3
2040	A3	3116	A2	4901	A3
2200	A2	3118	B3	4905	A1
2202	A1	3120	B3	4907	A1
2204	A1	3200	A2	4924	B2
2206	A1	3202	A2	4925	B2
2300	A1	3204	A1	4926	B2
2302	B1	3206	A2	4929	B1
2306	B1	3208	A1	4930	B2
2400	B1	3210	A1	4932	A1
2410	B1	3212	A1	4933	A1
2412	B2	3214	A1	4934	B1
2414	B2	3216	A1	4936	B1
2416	B2	3218	A1	4945	B1
2418	B3	3220	A1	4946	B1
2420	B3	3222	A2	5600	A2
2422	B3	3224	A1	6000	A3
2424	B3	3226	A1	6002	A3
2500	A3	3228	A1	7000	A3
2502	B2	3230	A2	7002	A3
2602	A1	3232	A1	7004	A3
3000	A3	3234	A1	7006	A3
3002	A3	3236	A1	7008	A3
3004	A3	3238	A1	7010	A3
3006	A3	3240	A1	7012	A3
3008	A3	3242	A1	7014	B3
3010	A3	3244	A1	7016	B3
3012	A3	3300	A1	7018	B3
3014	A3	3302	A1	7020	B3
3016	A3	3304	A1	7022	B3
3018	A3	3306	A1	7024	B2
3020	A3	3308	A1	7026	B3
3022	A3	3310	A1	7028	A2
3024	A3	3312	B1	7030	A2
3026	A3	3316	B1	7032	A2
3028	B2	3318	B1	7038	A2
3030	A3	3320	B1	7040	A3
3032	A3	3322	B1	7042	A2
3034	A3	3324	B1	7200	A2
3036	A3	3326	B1	7202	A1
3038	A3	3328	B1	7204	A1
3040	A3	3330	B1	7206	A1
3042	A3	3400	B2	7208	A1
3044	A3	3402	B1	7210	A1
3046	B3	3404	B1	7212	A2
3048	B3	3406	A1	7300	A1
3050	B3	3408	B1	7302	A1
3052	B3	3410	B1	7304	B1
3054	B3	3418	B1	7400	B1
3056	B3	3420	B1	7402	B1
3058	B3	3422	B1	7408	B1
3060	B3	3424	B1	7410	B1
3062	B3	3426	B1	7412	B2
3064	B3	3428	B1	7414	B2
3066	B3	3430	B2	7416	B2
3068	B2	3432	B2	7418	B2
3070	B2	3434	B2	7420	B3
3072	B3	3436	B2	7422	B3
3074	B2	3438	B2	7500	B2
3076	B2	3440	B2		

Wireless Surround Receiver

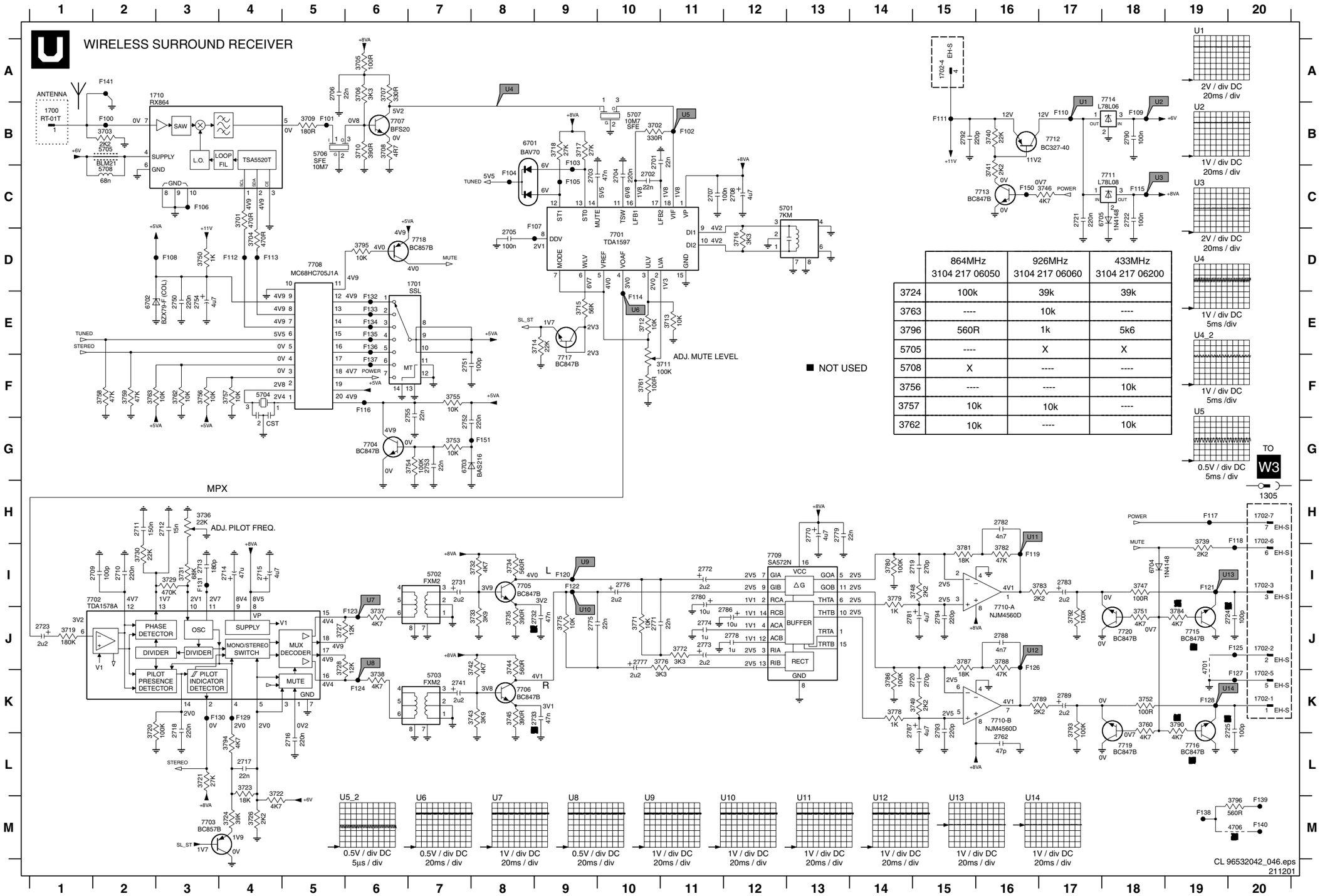

	864MHz 3104 217 06050	926MHz 3104 217 06060	433MHz 3104 217 06200
3724	100k	39k	39k
3763	----	10k	----
3796	560R	1k	5k6
5705	----	X	X
5708	X	----	----
3756	----	----	10k
3757	10k	10k	----
3762	10k	----	10k

1700 B1
1701 D7
1702-1 K20
1702-2 J20
1702-3 I20
1702-4 A15
1702-5 K20
1702-6 H20
1702-7 H20
1710 A2
2701 C10
2702 C10
2703 C9
2704 C10
2705 D8
2706 A5
2707 C11
2708 C12
2709 I2
2710 I2
2711 H2
2712 H3
2713 I3
2714 I4
2715 I4
2716 K5
2717 L4
2718 K3
2719 I15
2720 K15
2721 C17
2722 C18
2723 J1
2724 J20
2725 K20
2731 I7
2732 J9
2733 K9
2741 K7
2750 E3
2751 F7
2752 G7
2753 G7
2754 E3
2755 F7
2762 L16
2770 H13
2771 J10
2772 I1
2773 J11
2774 J11
2775 J9
2776 I10
2777 J10
2778 J12
2779 H13
2780 I11
2781 J14
2782 H16
2783 I17
2786 J12
2787 K14
2788 J16
2789 K17
2790 B18
2792 B15
2793 K15
2794 J15
3701 C4
3702 B10
3703 B2
3704 C4
3705 A6
3706 A6
3707 A6
3708 B6
3709 B5
3710 B6
3711 E11
3712 E10
3713 E11
3714 E9
3715 E9
3716 D12
3717 B9
3718 B9
3719 J1
3720 K2
3721 L3
3722 M4
3723 L4
3724 M4
3726 M4
3727 J5
3728 J5
3729 I3
3730 I2
3731 I3
3732 I8
3733 J8
3734 I8
3735 J8
3736 H3
3737 J6
3738 K6
3739 I19
3740 B16
3741 C16
3742 J8
3743 K8
3744 J8
3745 K8
3746 C17
3747 I18
3748 I15
3749 K15
3750 D3
3751 J18
3752 K18
3753 G7
3754 G7
3755 F7
3756 F3
3757 F4
3758 F2
3759 F2
3760 K18
3761 F10
3762 F3
3763 F2
3771 J10
3772 J11
3775 J9
3776 J10
3778 K14
3779 I14
3780 I14
3781 I15
3782 I16
3783 I17
3784 J19
3786 K14
3787 J15
3788 J16
3789 K17
3790 K19
3792 J17
3793 K17
3794 L4
3795 D6
3796 M20
4701 J19
4706 M20
5701 C12
5702 I7
5703 K7
5704 F4
5705 B2
5706 B5
5707 B10
5708 C2
6701 B8
6702 E2
6703 G7
6704 I18
6705 C18
7701 D10
7702 I1
7703 M3
7704 G6
7705 I8
7706 K8
7707 B6
7708 F5
7709 I12
7710-A I16
7710-B K16
7711 C18
7712 B17
7713 C16
7714 A18
7715 J19
7716 L19
7717 F9
7718 D7
7719 L18
7720 J18
F100 B2
F101 B5
F102 B11
F103 B9
F104 C8
F105 C9
F106 C3
F107 D9
F108 D3
F109 B18
F110 B17
F111 B15
F112 D4
F113 D4
F114 D10
F115 C18
F116 F6
F117 H19
F118 H20
F119 I16
F120 I9
F121 I20
F122 I9
F123 J6
F124 K6
F125 J20
F126 J16
F127 K20
F128 K20
F129 K4
F130 K4
F131 I3
F132 E6
F133 E6
F134 E6
F135 E6
F136 E6
F137 F6
F138 M19
F139 M20
F140 M20
F141 A2
F150 C16
F151 G8

Layout Wreless Surround Receiver (Top View)

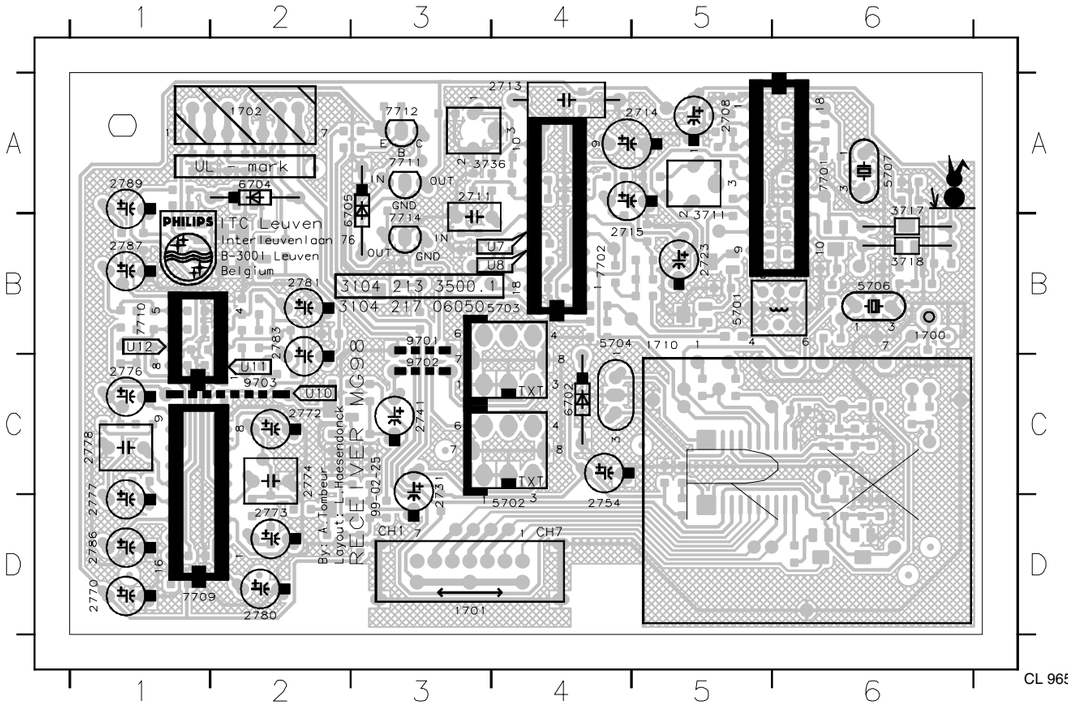

1700 B6
1701 D3
1702 A2
1710 B5
2708 A5
2711 A3
2713 A4
2714 A5
2715 B4
2723 B5
2731 C3
2741 C3
2754 D4
2770 D1
2772 C2
2773 D2
2774 C2
2776 C1
2777 D1
2778 C1
2780 D2
2781 B2
2783 C2
2786 D1
2787 B1
2789 A1
3711 B5
3717 A6
3718 B6
3736 A4
5701 B5
5702 D4
5703 B4
5704 B4
5706 B6
5707 A6
6702 C4
6704 A2
6705 A2
7701 A6
7702 B4
7709 D1
7710 B1
7711 A3
7712 A3
7714 B3
9701 C3
9702 C3
9703 C2

CL 96532042_051.eps
020699

Layout Wreless Surround Receiver (Bottom View)

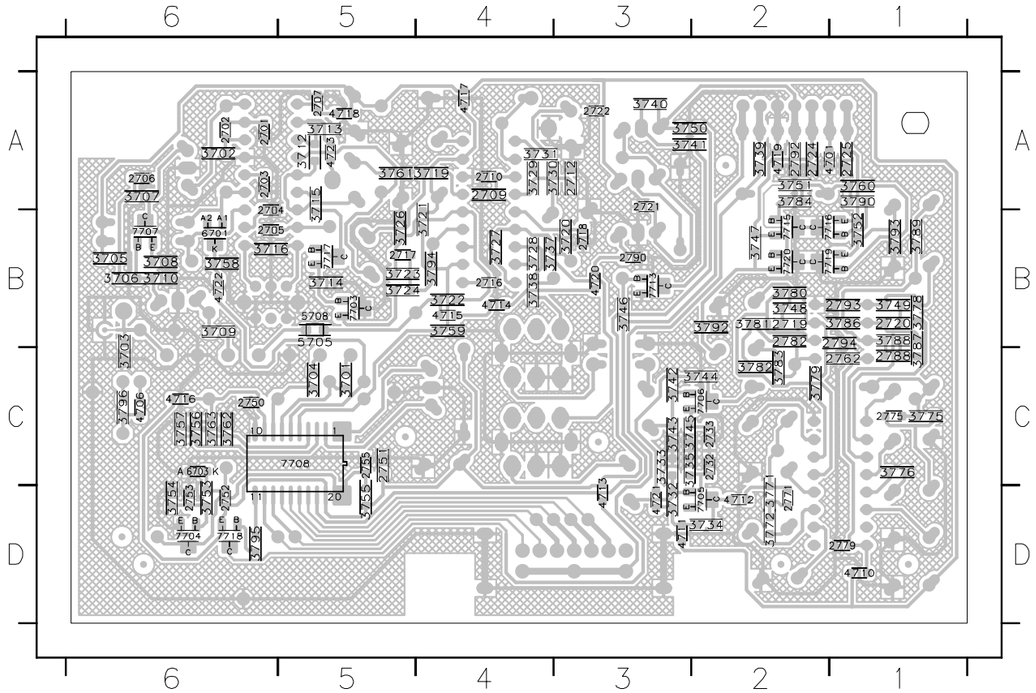

2701 A6
2702 A6
2703 A6
2704 A5
2705 B5
2706 A6
2707 A6
2709 A4
2710 A4
2712 A3
2716 B4
2717 B5
2718 B3
2719 B2
2720 B1
2721 A3
2722 A3
2724 A2
2725 A1
2732 C2
2733 C2
2750 C6
2751 C5
2752 D6
2753 C6
2755 C5
2762 C1
2771 D2
2775 C1
2779 D1
2782 C2
2788 C1
2790 B3
2792 A2
2793 B1
2794 B1
3701 C5
3702 A6
3703 C6
3704 C5
3705 B6
3706 B6
3707 A6
3708 B6
3709 B6
3710 B6
3712 A5
3713 A5
3714 B5
3715 B5
3716 B6
3719 A4
3720 B4
3721 B4
3722 B4
3723 B5
3724 B5
3726 B5
3727 B4
3728 B4
3729 A4
3730 A3
3731 A4
3732 D3
3733 C3
3734 D2
3735 C3
3737 B3
3738 B4
3739 A2
3740 A3
3741 A2
3742 C3
3743 C3
3744 C2
3745 C3
3746 B3
3747 B2
3748 B2
3749 B1
3750 A3
3751 A2
3752 B1
3753 C6
3754 D6
3755 D5
3756 C6
3757 C6
3758 B6
3759 B4
3760 A1
3761 A5
3762 C6
3763 C6
3771 D2
3772 D2
3775 C1
3776 C1
3778 B1
3779 C1
3780 B2
3781 B2
3782 C2
3783 C2
3784 A2
3786 B2
3787 C1
3788 B1
3789 B1
3790 A1
3792 B3
3793 B1
3794 B4
3795 D6
3796 C6
4701 A2
4706 C6
4710 D1
4711 D3
4712 D2
4713 D3
4714 B4
4715 B4
4716 C6
4717 A4
4718 A5
4719 A2
4720 B3
4721 D3
4722 B6
4723 A5
5705 B5
5708 B5
6701 A6
6703 C6
7703 B5
7704 D6
7705 D2
7706 C2
7707 A6
7708 D3
7713 B3
7715 B2
7716 B2
7717 B5
7718 D6
7719 B1
7720 B2

CL 96532042_052.eps
191201

Personal Notes:

Personal Notes:

Active Speaker Box: Amplifier

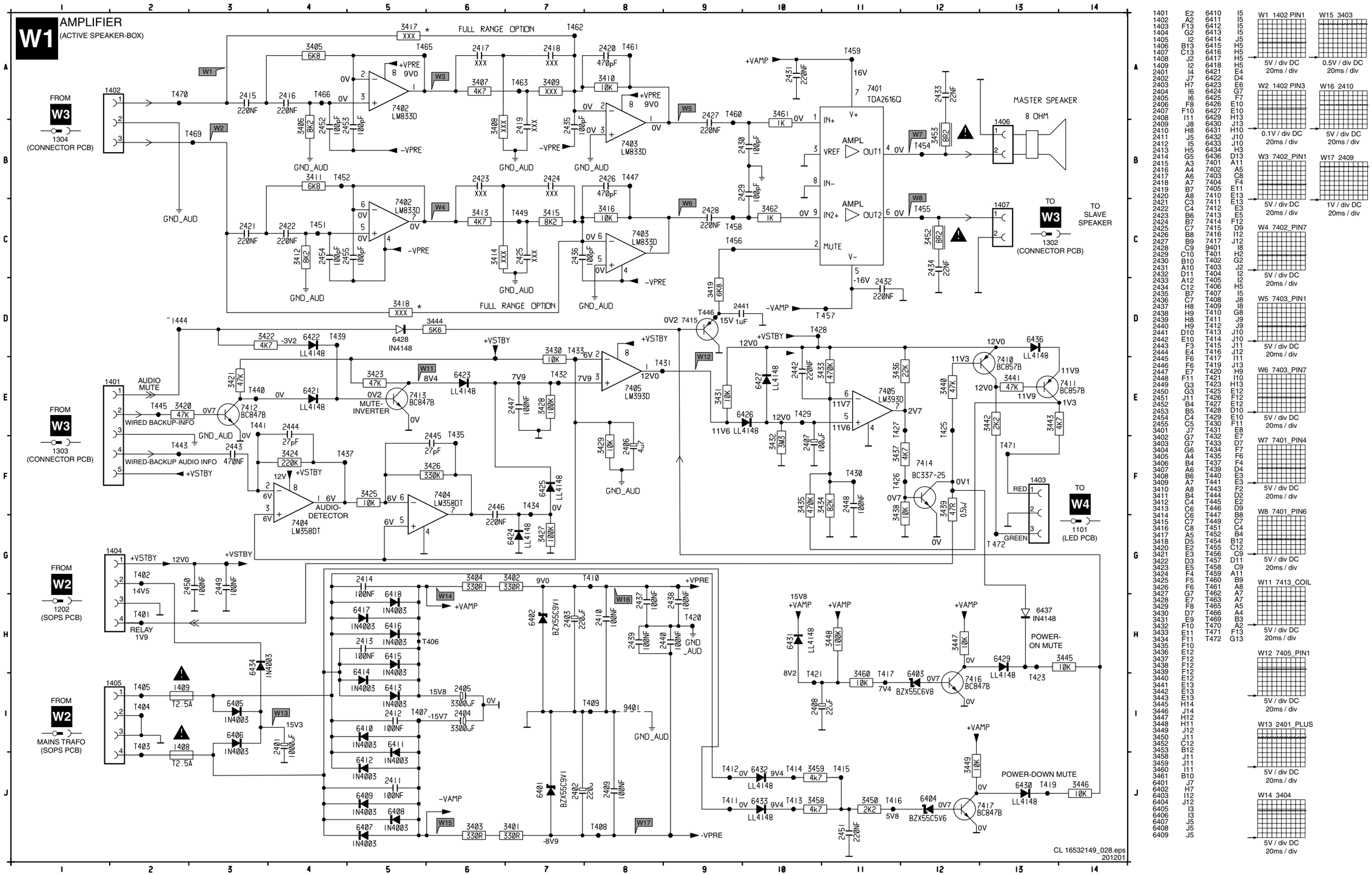

1401	E2	6410	I5
1402	A2	6411	I5
1403	F13	6412	I5
1404	G2	6413	I5
1405	I2	6414	J5
1406	B13	6415	H5
1407	C13	6416	H5
1408	J2	6417	H5
1409	I2	6418	H5
2401	I4	6421	E4
2402	J7	6422	D4
2403	H7	6423	E6
2404	I6	6424	G7
2405	I6	6425	F7
2406	F8	6426	E10
2407	F10	6427	E10
2408	I11	6429	H13
2409	J8	6430	J13
2410	H8	6431	H10
2411	J5	6432	J10
2412	I5	6433	J10
2413	H5	6434	H3
2414	G5	6436	D13
2415	A3	7401	A11
2416	A4	7402	A5
2417	A6	7403	C8
2418	A7	7404	F4
2419	B7	7405	E11
2420	A8	7410	E13
2421	C3	7411	E13
2422	C4	7412	E3
2423	B6	7413	E5
2424	B7	7414	F12
2425	C7	7415	D9
2426	B8	7416	I12
2427	B9	7417	J12
2428	C9	9401	I8
2429	C10	T401	H2
2430	B10	T402	G2
2431	A10	T403	J2
2432	D11	T404	I2
2433	A12	T405	I2
2434	C12	T406	H5
2435	B7	T407	I5
2436	C7	T408	J8
2437	H8	T409	I8
2438	H9	T410	G8
2441	H8	T411	J9
2440	H9	T412	J9
2441	D10	T413	J10
2442	E10	T414	J10
2443	F3	T415	J11
2444	E4	T416	J12
2445	F6	T417	I11
2446	F6	T419	J13
2447	E7	T420	H9
2448	F11	T421	I10
2449	G3	T423	H13
2450	G3	T425	E12
2451	J11	T426	F12
2452	B4	T427	E12
2453	B5	T428	D10
2454	C4	T429	E10
2455	C5	T430	F11
3401	J7	T431	E8
3402	G7	T432	E7
3403	G7	T433	D7
3404	G6	T434	F7
3405	A4	T435	F6
3406	B4	T437	F4
3407	A6	T439	D4
3408	B6	T440	E3
3409	A7	T441	E3
3410	A8	T443	F2
3411	B4	T444	D2
3412	C4	T445	E2
3413	C6	T446	D9
3414	C6	T447	B8
3415	C7	T449	C7
3416	C8	T451	C4
3417	A5	T452	B4
3418	D5	T454	B12
3420	E2	T455	C12
3421	E3	T456	C9
3422	D3	T457	D11
3423	E5	T458	C9
3424	F4	T459	A11
3425	F5	T460	B9
3426	F6	T461	A8
3427	G7	T462	A7
3428	E7	T463	A7
3429	F8	T465	A5
3430	D7	T466	A4
3431	E9	T469	B3
3432	F10	T470	A2
3433	E11	T471	F13
3434	F11	T472	G13
3435	F10		
3436	E12		
3437	F12		
3438	F12		
3439	F12		
3440	E12		
3441	E13		
3442	E13		
3443	E13		
3445	H14		
3446	J14		
3447	H12		
3448	H11		
3449	J12		
3450	J11		
3452	C12		
3453	B12		
3458	J11		
3459	J11		
3460	I11		
3461	B10		
6401	J7		
6402	H7		
6403	I12		
6404	J12		
6405	I3		
6406	I3		
6407	J5		
6408	J5		
6409	J5		

Layout Speaker Box: Amplifier (W1)

Top View

1401 B4	2401 A3	3402 B1	6401 B2	6410 A2	6428 B3	9409 C3
1402 C4	2402 B2	3403 B1	6402 B1	6411 A2	6434 A3	9410 B2
1403 A4	2403 B1	3404 B1	6403 B2	6412 A2	6437 B3	9411 A3
1404 A4	2404 B2	3417 C4	6404 B3	6413 A1	7401 C2	
1405 B2	2405 B1	3419 C2	6405 A2	6414 A1	7414 A3	
1406 C1	2406 B3	3425 B3	6406 A2	6415 A1	9405 C3	
1407 C1	2407 A3	3439 A3	6407 A2	6416 A1	9406 C2	
1408 A3	2408 B2	3452 C1	6408 A2	6417 A1	9407 C2	
1409 A2	3401 B1	3453 C1	6409 A2	6418 A2	9408 A4	

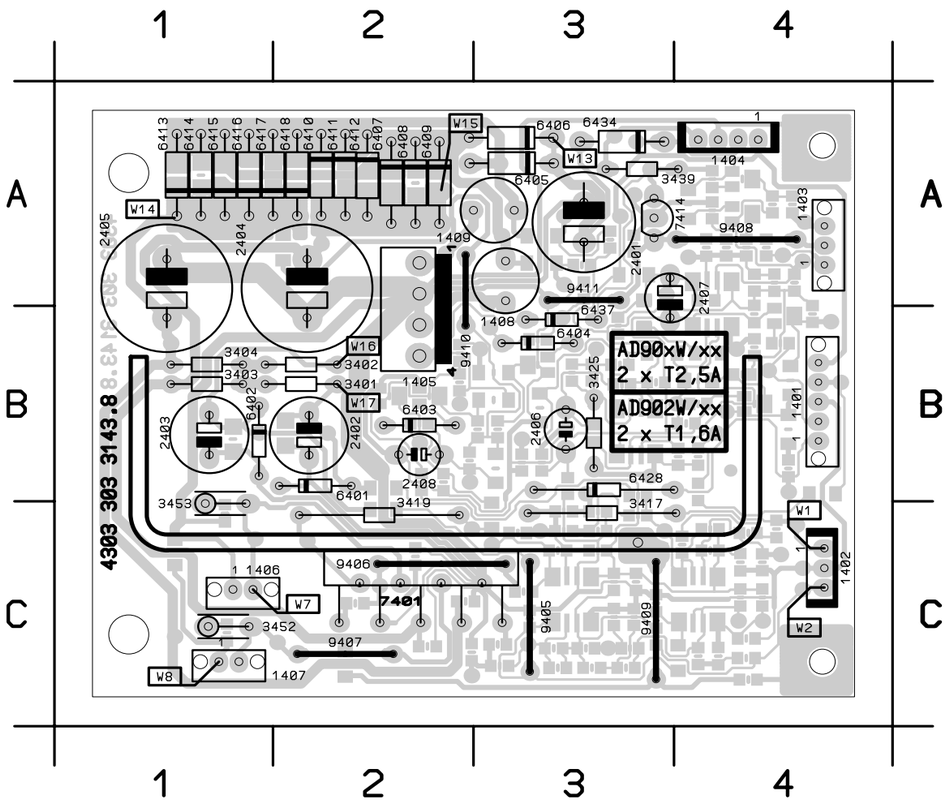

Bottom View

2409 B2	2428 C3	2447 B4	3415 C3	3437 A4	4402 B4	6431 B3
2410 B1	2429 C2	2448 A4	3416 C3	3438 A3	4403 C1	6432 A3
2411 A2	2430 C2	2449 B4	3418 C3	3440 A4	4404 C2	6433 A3
2412 A2	2431 C2	2450 B3	3420 B4	3441 A4	4405 C4	6436 A4
2413 A1	2432 C2	2451 A3	3421 B4	3442 A4	4406 B2	7402 C4
2414 A1	2433 C1	2452 C4	3422 B4	3443 A4	4407 C2	7403 C3
2415 C4	2434 C1	2453 C4	3423 B4	3444 B2	4408 B3	7404 B3
2416 C4	2435 C3	2454 C4	3424 B4	3445 B2	4409 B3	7405 A4
2417 C3	2436 C3	2455 C4	3426 B3	3446 B2	4410 C3	7410 A4
2418 C3	2437 C3	3405 C4	3427 B3	3447 B3	4411 A2	7411 A4
2419 C3	2438 C3	3406 C4	3428 B4	3448 B2	6421 B4	7412 B4
2420 C3	2439 C4	3407 B3	3429 B3	3449 B3	6422 B4	7413 B4
2421 C4	2440 C3	3408 C3	3430 B3	3450 B3	6423 B4	7415 B2
2422 C4	2441 B2	3409 C3	3431 B4	3458 A3	6424 B3	7416 B2
2423 C3	2442 A4	3410 C3	3432 B3	3459 A3	6425 B3	7417 B3
2424 C3	2443 B4	3411 C4	3433 A4	3460 B2	6426 B3	9401 C3
2425 C3	2444 B4	3412 C4	3434 A4	3461 C2	6427 A3	
2426 C3	2445 B3	3413 C3	3435 A4	3462 C3	6429 B3	
2427 C3	2446 B3	3414 C3	3436 A4	4401 B4	6430 B3	

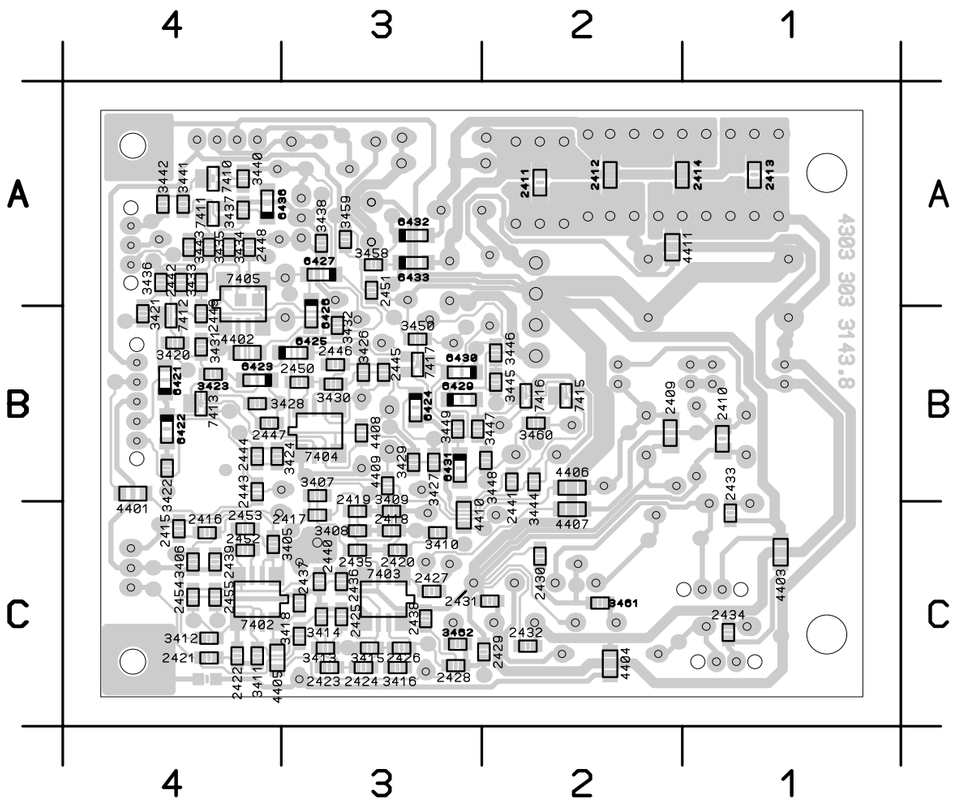

CL 16532149_055.eps
201201

Active Speaker Box: SOPS Supply

1201 F11	2201 B11	2207 A5	3202 B2	3208 B7	3215 B7	3222 C6	5204 A8	6204 E11	6210 C6	7205 D6	9204 G10	T206 A4	T212 B12	T218 T218	T224 B5
1202 B13	2202 A9	2208 B4	3203 B2	3209 D6	3216 C6	3223 B10	5205 B8	6205 B6	6211 B10	7206 B6	T201 G10	T207 A1	T213 B10	T219 B8	T225 D6
1203 A1	2203 B9	2209 B9	3204 C9	3210 C6	3217 C6	0086 F12	5206 E10	6206 A5	6212 B10	7207 B6	T202 G10	T208 A1	T214 C9	T220 B8	T226 C5
1204 B3	2204 B8	2210 B12	3205 D9	3211 D7	3219 B5	5201 B3	6201 A10	6207 D7	7201 A11	9201 G10	T203 G10	T209 B12	T215 A9	T221 A8	
1206 B2	2205 D8	2211 C10	3206 D9	3212 D8	3220 B5	5202 C5	6202 A9	6208 B7	7203 D8	9202 G10	T204 F10	T210 B12	T216 D9	T222 A7	
1209 B10	2206 B6	3201 C9	3207 A7	3214 B8	3221 A8	5203 C5	6203 E11	6209 B8	7204 B8	9203 G10	T205 F10	T211 B12	T217 E7	T223 B6	

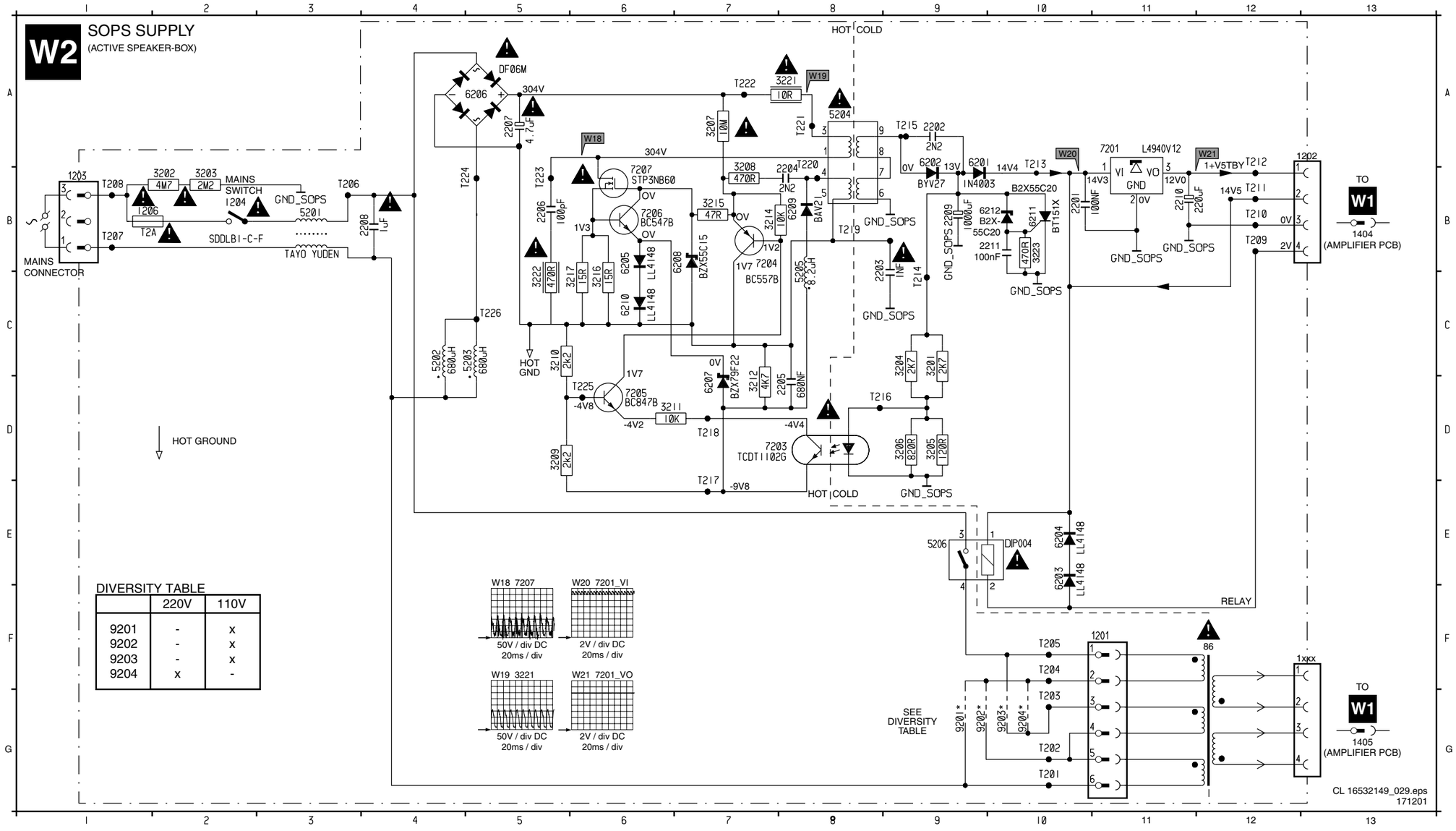

DIVERSITY TABLE

	220V	110V
9201	-	x
9202	-	x
9203	-	x
9204	x	-

Layout Speaker Box: SOPS Supply (W2)

Top View

1201 B1	2208 C3	3219 C3	6201 A1	7206 A3
1202 A1	2209 A1	3220 B3	6202 A2	7207 A3
1203 C1	2210 A1	3221 B2	6206 B3	9201 C1
1204 C2	3202 C1	3222 A3	6207 A3	9202 B1
1206 C1	3203 B1	5201 C2	6208 A3	9203 B1
2202 A2	3207 B3	5202 C3	6209 B3	9204 B1
2203 A2	3208 B3	5203 C3	6211 A1	9205 B3
2205 B2	3215 B3	5204 A2	7201 A1	
2206 A3	3216 A3	5205 B2	7203 A2	
2207 B3	3217 A3	5206 B1	7204 B2	

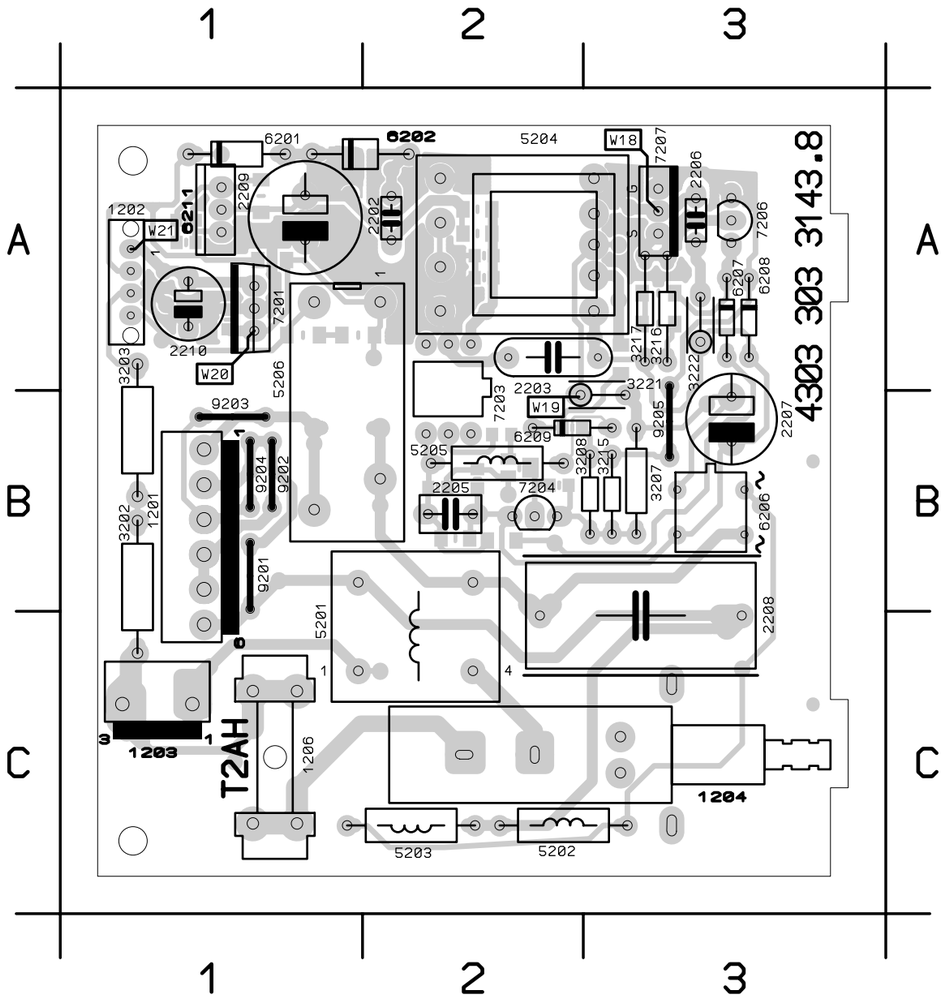

Bottom View

2201 A1	3205 A2	3212 B2	4203 B2	6212 A1
2204 B2	3206 A2	3214 B2	6203 A1	7205 B2
2211 A1	3209 B2	3223 A1	6204 A1	
3201 A2	3210 B2	4201 A3	6205 A3	
3204 A2	3211 B2	4202 A1	6210 A3	

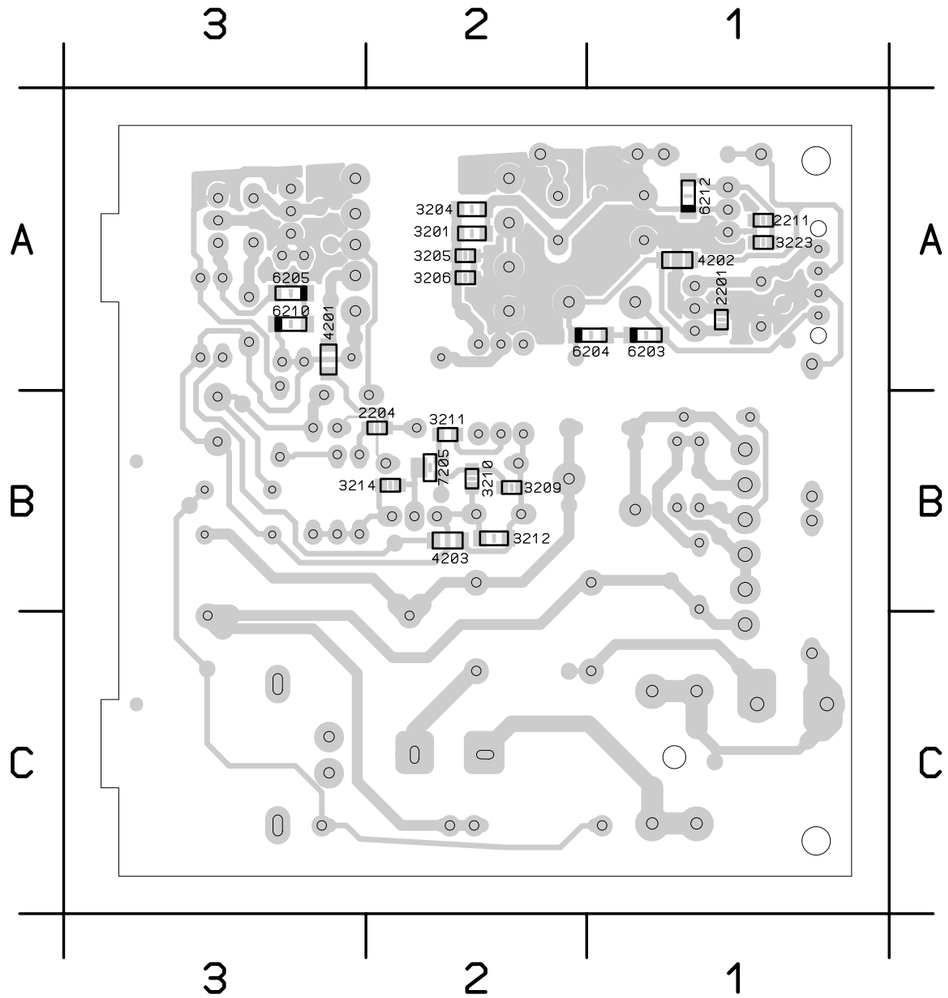

CL 16532149_056.eps
201201

Active Speaker Box: Connector

1301	A 7	1305	D2	2302	G4	3302	D5	3306	C5	T302	A3	T306	T310	D2	T314	F6
1302	A2	1306	F2	2303	B3	3303	D4	3307	F5	T303	F3	T307	T311	C2	T315	F6
1303	F7	1307	D5	2304	B3	3304	D4	3308	G5	T304	G3	T308	T312	F6	T316	G6
1304	D7	2301	F4	3301	D5	3305	C4	T301	B3	T305	D6	T309	T313	F6		

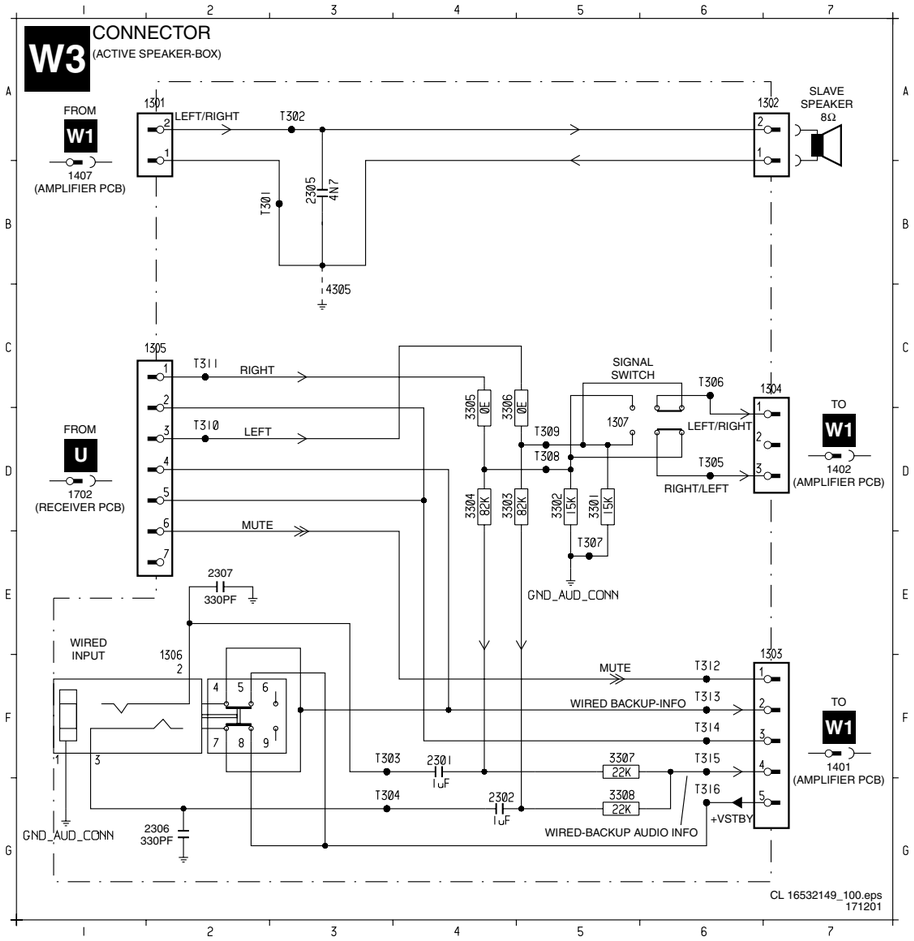

Active Speaker Box: LED

1501 A2
6101 C3

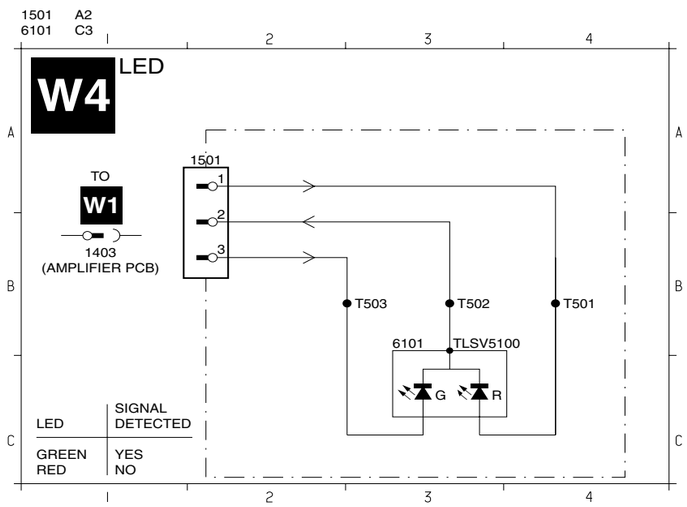

Layout Led Panel (Top View)

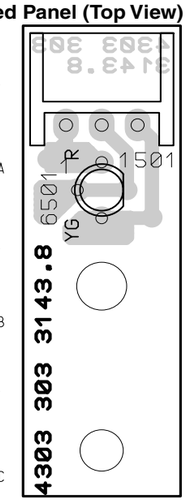

CL 16532149_057.eps
201201

Layout Active Speaker Box: Connector (W3)

Top View

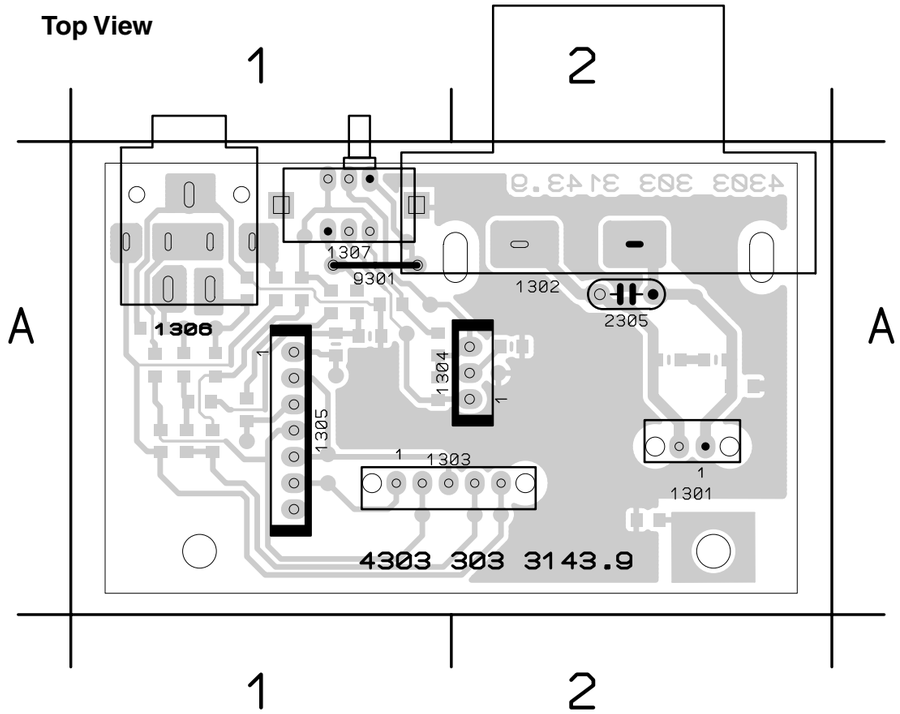

1301 A2
1302 A2
1303 A1
1304 A2
1305 A1
1306 A1
1307 A1
2305 A2
9301 A1

Bottom View

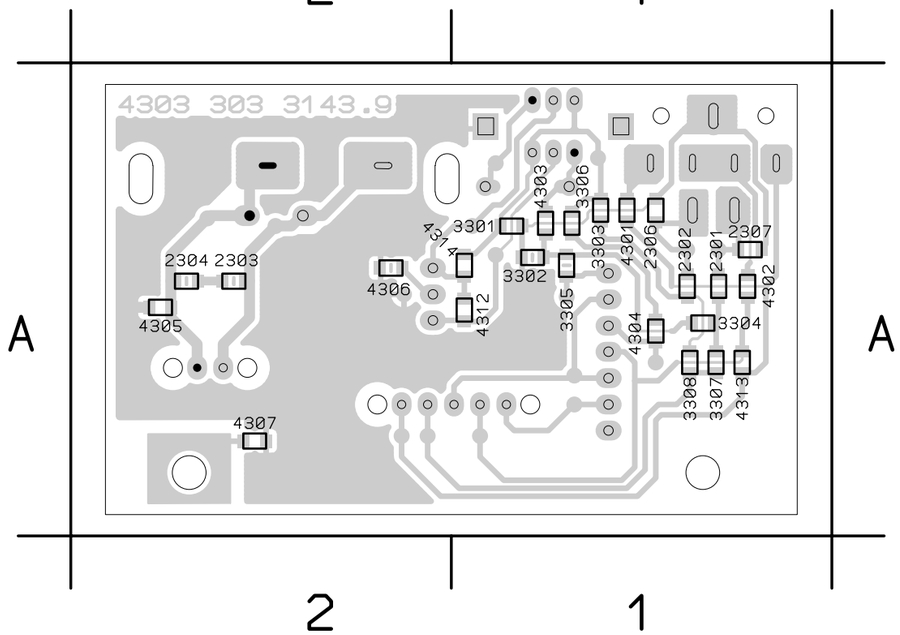

2301 A1
2302 A1
2303 A2
2304 A2
2306 A1
2307 A1
3301 A1
3302 A1
3303 A1
3304 A1
3305 A1
3306 A1
3307 A1
3308 A1
4301 A1
4302 A1
4303 A1
4304 A1
4305 A2
4306 A2
4307 A2
4312 A1
4313 A1
4314 A1

CL 16532149_054.eps
201201

8. Electrical Alignments

Index of this chapter:
1. Introduction.
2. Option settings.
3. Hardware alignments.
4. Software alingnments.

Notes: The Service Default Mode (SDM) and Service Alignment Mode (SAM) are described in chapter 5. Menu navigation is done with the 'CURSOR UP, DOWN, LEFT or RIGHT' keys of the remote control transmitter.

8.1 Introduction

8.1.1 Start Conditions

Perform all electrical adjustments under the following conditions:
- Power supply voltage: 230 V_{AC}/50 Hz (± 10 %).
- Connect the set to the mains via an isolation transformer with low internal resistance.
- Allow the set to warm up for approximately 20 minutes.
- Measure the voltages and waveforms in relation to chassis ground (with the exception of the voltages on the primary side of the power supply).
- Caution: never use the cooling fins/plates as ground.
- Test probe: Ri > 10 MΩ, Ci < 20 pF.
- Use an isolated trimmer/screwdriver to perform the alignments.

Perform all electrical adjustments with the following start settings (for all CRTs):
- Set LIGHT SENSOR ‘off’ (set ACTIVE CONTROL to 'off' with the remote control).
- Set BRIGHTNESS to ‘23’ (via PICTURE menu, set indicator somewhat below the centre (= 32) point).
- Set COLOUR ENHANCEMENT to ‘off’ (via PICTURE menu).
- **Set DIGITAL OPTIONS to 'Pixel Plus' (via PICTURE menu), unless otherwise stated.**
- Set DYNAMIC CONTRAST to ‘off’ (via PICTURE menu).
- Set CATHODE DRIVE at ‘15’ (via SAM - Alignments - General - Drive - Cathode).

8.1.2 Adjustment Sequence

Use the following adjustment sequence:
1. Modules, units and PWBs.
2. Set the correct TV-set ‘options’.
3. Rough adjustment of ‘Vg2’ and ‘Focus’.
4. Rough adjustment of ‘Geometry’.
5. Accurate adjustment of ‘Vg2’ and ‘Focus’.
6. Rough adjustment of ‘Geometry’.
7. Software alignments (cut-off, cathode drive, peak white, white drive, etc).

8.1.3 Factory Default Settings

In case something goes wrong during the alignments, use the following **factory default** settings:
- Contrast = 48 (≈ 3/4 of scale).
- Colour = 33 (28"), 32 (32"), or 31 (36").
- Sharpness = 3.
- Colour Enhancement = On.
- Tint = Normal.
- Digital Options = Pixel Plus.
- Dynamic Contrast = Medium.

8.2 Option settings

The microprocessor communicates with a large number of I^2C ICs in the set. To ensure good communication and to make digital diagnosis possible, the microprocessor has to know which ICs to address. The presence/absence of these specific ICs (or functions) is made known via the option codes.

You can set the 'hardware related' options via the SAM: 'Alignments - Options' or 'Option Numbers' menu.
You can set the 'software related' options via the SAM: 'Dealer Options' menu .

Important:
- After you have changed the option(s), save them via the 'Store' command.
- The new option setting is only active after the TV is switched 'off' and 'on' again via the mains switch (the NVM is then read out again).

8.2.1 Options

Select this sub-menu to set the initialisation codes (= options) of theTV via text menu's.

Table 8-1

Menu-item	Subjects	Options	Physically in the set
Dual screen/PIP	Aux type	None	Dual Screen/PIP module not present.
		Video Dual Screen	Dual Screen module present
		PIP	PIP module present
	Text Dual Screen	Yes	Text Dual Screen present (only for 16:9 sets)
		No	Text Dual Screen not present
	Aux Headph. Sound(optional)	Yes	
		No	
Teletext/EPG	TXT	Yes	Feature enabled
		No	Feature disabled
	NextView present	Yes	Feature enabled
		No	Feature disabled
	NextView type	Flashram	Flash-RAM (IC7013 on SSP) present
		No Flashram	Flash-RAM (IC7013 on SSP) not present
Communication	Easylink Plus	Yes	Feature enabled
		No	Feature disabled
Picture Tube	CRT Type	4:3	4:3 picture tube
		16:9	16:9 picture tube
	CRT size	28 / 32 / 36 / 29 / 34	Screen size in inches
	Picture Rotation(only for 16:9)	Yes	Frame rotation circuitry (IC7440 on LSP) present
		No	Frame rotation circuitry (IC7440 on LSP) not present
	Dynamic focus	Yes	Dynamic focus picture tube present
		No	Dynamic focus picture tube not present
	One point control	Yes	Feature enabled
		No	Feature disabled
	Anti-moirĖ filter	Yes	Not used
		No	Not used
Video repro	Featurebox type	Eco	PROZONIC not present
		Prozonic	PROZONIC present
		Falconic	FALCONIC present
		1050i/1250i	Progressive scan mode
		Eagle	Pixel plus mode
	Split Screen	Yes	
		No	
	Field memories	2	
		3	
	Lightsensor	Yes	Feature enabled
		No	Feature disabled
	Combfilter	Yes	Feature enabled
		No	Feature disabled
	Auto scavem	Yes	Feature enabled
		No	Feature disabled
	Picnic AGC	Yes	In 'Normal' operation: Yes
		No	During 'Drive' alignments: No
	Signalling bits	Yes	Format recognised
		No	Format not recognised
Audio Repro	Dolby	None	
		Pro Logic	
		Digital	MCS panel present
	Rear speakers	Corded	Not valid
		Virtual	Not valid
		Cordless	Active surroundbox present
	Acoustic system	FL7	Not valid
		FL8	Not valid
		FL9 Monitor	Not valid
		FL9 DAS	Not valid
		FL11	Soft design with full range speakers at both sides
Miscellaneous	Heatsink Present	Yes	Heatsink present on CRT panel (diagram F)
		No	Heatsink not present on CRT panel (diagram F)

8.2.2 Option numbers

Select this sub-menu to set all options at once (expressed in two long numbers).
An option number (or 'option byte') represents several options. When you change these numbers directly, you can set all options very fast. All options are controlled via eight option numbers.

Example: Option numbers 32PW9767/12:
1. **05984 12568 03840 00016**
2. **12326 00001 00000 04358**

The first line indicates the hardware related options 1 to 4, the second line is reserved for the software related options. Every 5-digit number represents 16 bits (so maximum number is 65536, if all options are set).

Table 8-2

Option Byte	Bit	Option name	Settings (given in decimal values)		Option number
Hardware Option 1	0	Feature Box	0 = Eco	1 = PROZONIC	Sum of HW Option 1
	1		3 = FALCONIC (bit 0+1)	2 = 1050i/1250i	
	2			4 = Eagle	
	3	Comb Filter	0 = Off	8 = On	
	4	Auto Scavem	0 = Off	16 = On	
	5	Field Memory	0 = 2 Memories	32 = 3 Memories	
	6	Light Sensor	0 = Off	64 = On	
	8	PICNIC	0 = Off	256 = On	
	9	PICNIC AGC	0 = Off	512 = On	
	10	FALCONIC	0 = FALCONIC v1	1024 = FALCONIC v2	
	11	LNA	0 = Off	2048 = On	
	12	WSS	0 = Off	4096 = On	
	13	Time Constant	0 = Normal	8192 = Fast	
Hardware Option 2	1	Dolby ProLogic	0 = Off	2 = On	Sum of HW Option 2
	2	Virtual Rear Speakers	0 = Off	4 = On	
	3	Cordless Rear Speakers	0 = Off	8 = On	
	4	Dolby Digital	0 = Off	16 = On	
	8	P50 (Easylink +)	0 = Off	256 = On	
	12	EPG	0 = Off	4096 = On	
	13	EPG type	0 = Type 2	8192 = Type 2C3	
Hardware Option 3	0	EXT3	0 = Off	1 = On	Sum of HW Option 3
	1	EXT4	0 = Off	2 = On	
	4	Dual Screen	0 = Off	16 = PIP	
	5			32 = Dual Screen	
	6	TXT/EPG Dual Screen	0 = Off	64 = On	
	7	AUX Headph. Sound	0 = Off	128 = On	
	8	Aspect Ratio	0 = 4:3	256 = 16:9	
	9	Tilt	0 = Off	512 = On	
	10	DAF	0 = Off	1024 = On	
	11	One Point Control	0 = Off	2048 = On	
	12	Heat Sink	0 = Off	4096 = On	
	14	Home Cinema	0 = Off	16384 = On	
Hardware Option 4	2	China IF	0 = Off	4 = On	Sum of HW Option 4
	4	Teletext	0 = Off	16 = On	
	5	China Text	0 = Off	32 = On	
Software Option 1	0	Auto TV	0 = Off	1 = On	Sum of SW Option 1
	1	Auto Store Mode	0 = None	2 = PDC/VPS	
	2		6 = PDC/VPS/TXT Page	4 = TXT Page	
	4	Picture Mute	0 = Off	16 = On	
	5	Demo Mode	0 = Off	32 = On	
	6	Virgin Mode	0 = Off	64 = On	
	12	TXT Preference	0 = TOP	4096 = FLOF	
	13	TXT Region	0 = East	8192 = West	
Software Option 2	0	CTI	0 = Off	1 = On	Sum of SW Option 2
Software Option 3					Sum of SW Option 3
Software Option 4	0	Cabinet		1 = FL7	Sum of SW Option 4
	1		3 = FL9 DAS (bit 0+1)	2 = FL8	
	2		6 = FL11 (bit 1+2)	4 = FL9 Monitor	
	3				
	8	Picture Tube Size	0 = 28"	256 = 32"	
	9		768 = 29" (bit 8+9)	512 = 36"	
	10			1024 = 34"	
	11				

When all the correct options are set, the sum of the decimal values of each Option Byte (OB) will give the option number.

Note: When the EAROM is replaced, all options will require a re-setting. To be certain that the factory settings are reproduced exactly, you must set both option number lines. You can find the correct option numbers on a CRT sticker inside the TV set.

8.2.3 Dealer Options

Table 8-3

Name	Subjects	Options	Physically in set
Picture	CTI	Yes	CTI enabled
		No	CTI disabled
Personal	Blue Mute	Yes	Blue mute active, in case no picture detected
		No	Noise, in case of no picture detected
	Virgin Mode	Yes	TV starts up once with language selection menu, after mains switch on for the first time (virgin mode)
		No	TV does not starts up once with language selection menu, after mains switch on for the first time (virgin mode)
	Auto Store Mode	None	Autostore mode disabled (not in installation menu)
		PDC-VPS	Autostore mode via ATS (PDC/VPS) enabled
		TXT page	Autostore mode via ACI enabled
		PDC-VPS-TXT	Autostore mode via ACI or ATS enabled
	Demo Menu Enable	Yes	Demo menu enable
		No	Demo menu disable
	Auto TV	Yes	Auto TV mode enabled
		No	Auto TV mode disabled
Teletext	TXT Preference	TOP	Preference to TOP Teletext
		FLOF	Preference to FLOF Teletext
	East/West TXT	West	TXT characters for non -/58 sets
		East	TXT characters for -/58 sets

8.3 Hardware Alignments

8.3.1 Alignments on the Top Supply Panel (TSP)

+141 V (V_{BAT}) Supply Voltage

TSP (component side)

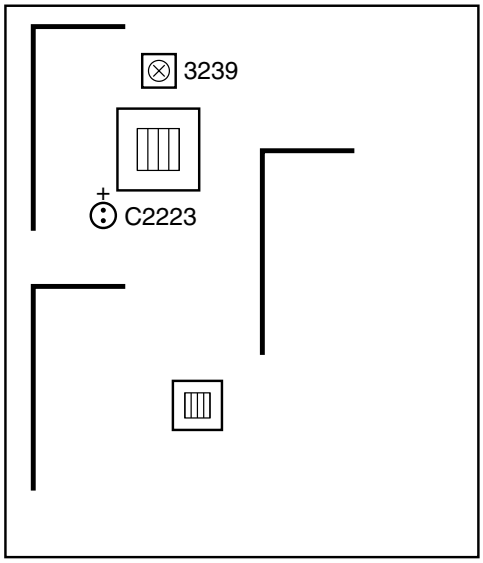

CL 16532149_075.eps
061201

Figure 8-1

1. Switch the set 'off'.
2. Connect a voltmeter across C2223 (see also diagram B, $+V_{BAT}$).
3. Switch the set 'on'.
4. Use potentiometer R3239 (see figure above) to adjust the V_{BAT} supply voltage to +141 ± 0.5 V.

8.3.2 Alignments on the Large Signal Panel (LSP)

For the Focus and Vg2 alignment, see paragraph 8.3.3.

8.3.3 Alignments on the Double Astigmatic Focus (DAF) Panel

DAF Module

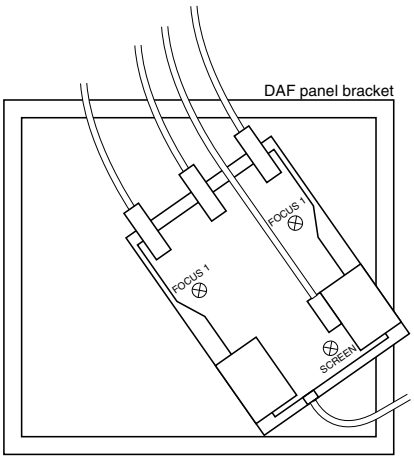

CL 06532016_017.eps
030300

Figure 8-2

Vg2 Adjustment

Method 1 (without oscilloscope)

1. Activate the SAM.
2. Select 'Alignments'.

3. Select the 'General' sub-menu.
4. Set 'Vg2 Test Pattern' to 'On'
5. You will now get OSD feedback during Vg2 alignment.
6. First turn the Vg2 (= SCREEN) potmeter on the DAF-module (or LOT) to the left (see figure above)
7. OSD feedback will show 'Out high'.
8. Turn the Vg2 potmeter slowly clockwise until you read 'In low'. This is the correct value.

Method 2 (with oscilloscope)

Waveform Vg2 alignment

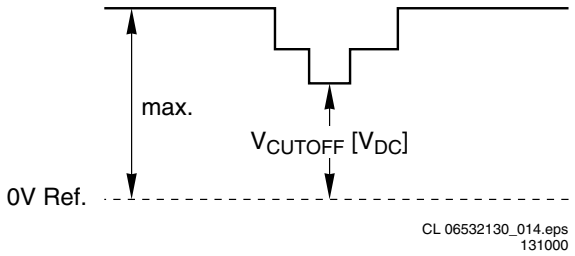

Figure 8-3

In the frame-blanking period of the R, G and B signals (applied to the CRT), the 'HOP' video processor (IC7300) inserts a measuring pulse as reference for the Vg2 adjustment. See figure above.
Measure all three signals, and use the pulse with the highest DC-level for the Vg2 adjustment.

1. Go, via the MENU key, to the PICTURE menu, and set CONTRAST and BRIGHTNESS to '0'
   Service tip: First, write down the actual values so you can restore them after the alignment.
2. Activate the SDM (see chapter 5).
3. Connect the RF output of a pattern generator to the antenna input. Test pattern is a 'black' picture (blank screen on CRT without any OSD info) with a carrier frequency of 425.25 MHz.
4. Set the channel of the oscilloscope to 50 V/div and the time base to 0.2 ms. Trigger the scope external via a CVBS signal (e.g. via pin 19 of the SCART1 connection).
5. Ground the scope at the CRT panel ('cold' side) and connect a 10:1 probe to one of the cathodes of the picture tube socket (see diagram F).
6. Measure the 'cut off' pulse during the first full line after the frame blanking (see figure above). You will see two pulses, one being the 'cut off' pulse and the other being the 'white drive' pulse (measure the pulse with the lowest value, this is the cut-off pulse).
7. Measure all three cathodes, and select the one with the highest V_{DC} value for the alignment. Adjust the $V_{CUT\ OFF}$ of this gun with the SCREEN potentiometer on the LOT (see figure 8-5) to the correct value:
   – for 28" CRTs: 160 ± 3 V_{DC}.
   – for 32" CRTs: 170 ± 5 V_{DC}.
   – for 36" CRTs: 170 ± 3 V_{DC}.
8. Restore CONTRAST and BRIGHTNESS to the normal settings (see point 1).

Focus Alignment
Tune the set to a 'circle' or 'crosshatch' test pattern (use an external video pattern generator), and set BRIGHTNESS, COLOUR and SHARPNESS to nominal, and CONTRAST to maximum.
Now there are three set executions:

1. **For picture tubes with potmeters on the DAF module**. Align the focus, by means of the 2 focus potentiometers on the DAF-module (above the LOT, see figure 8.2) until the horizontal and vertical lines at 1/4 from east and west, at the height of the centre line, are of minimum width without introducing a visible haze. First, align the FOCUS1 (green) and then the FOCUS2 (black) potentiometer.
2. **For picture tubes with potmeters in the LOT**. Adjustment is identical.
3. **For 32' Real Flat picture tubes**. First, align the 'static' focus potmeter (black) until the vertical lines, at the height of the centre line, are of minimum width without introducing a visible haze. Then, align the 'dynamic' focus potmeter (green) until the vertical lines, at the height of the centre line, are of minimum width without introducing a visible haze.

Repeat steps if necessary.

8.3.4 Alignments on the Small Signal Panel (SSP)

40.4 MHz Neighbour-channel Sound Trap

SSP (component side)

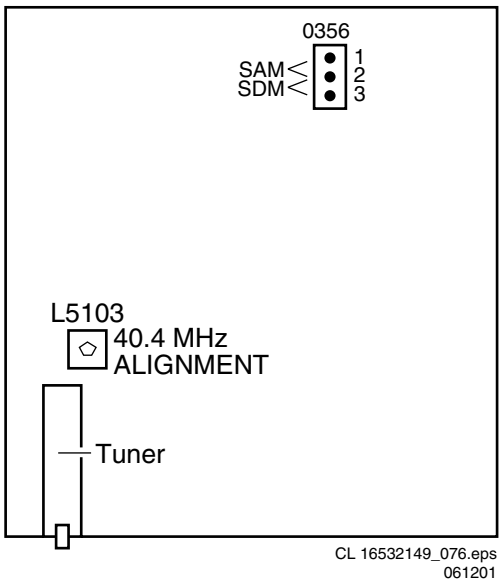

Figure 8-4

1. Tune to a checker board test-pattern (system BG - and with a carrier frequency of 475.25 MHz).
2. Connect an oscilloscope (trigger line frequent) to pin 19 (CVBS out) of the SCART1 connection.
3. Align coil L5103 (on SSP, diagram K1) completely downwards (see figure above).
4. Align the coil upwards till under- and overshoot arise at the black/white and white/black transitions in the video signal (see figure below).
5. Align the coil downwards again until above mentioned under- and overshoot is just disappeared.

Waveform 40.4 MHz Alignment

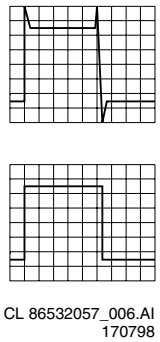

Figure 8-5

8.3.5 Alignments on the Full Dual Screen (FDS) Panel

These alignments are of interest when ICs, e.g. HIP (IC7501-TDA9320H) or EAROM (IC7991-M24C04), are exchanged on the FDS-module, or if the FDS Tuner (UV1316) has been exchanged.

40.4 MHz Neighbour-Channel Sound Trap

1. Tune the FDS-module to a checker board test-pattern (system BG - and with a carrier frequency of 475.25 MHz). See to it that the main program of the set is tuned to another channel.
2. Connect an oscilloscope (trigger line frequent) to pin 19 (CVBS out) of the SCART2 connection. This output is WYSIWYR (what you see is what you record)
3. Align the coil L5103 (on FDS, just below the tuner) completely downwards.
4. Align the coil upwards till under- and overshoot arise at the black/white and white/black transitions in the video signal (see figure above).
5. Align the coil downwards again till above mentioned under- and overshoot is just disappeared.

IF AFC

See paragraph ‘Software Alignments - General - VDS/PIP - IF AFC‘ below.

Tuner AGC

See paragraph ‘Software Alignments - General - VDS/PIP - Tuner AGC‘ below.

8.3.6 Alignments on the Surround Transmitter Module (diagr. R)

This alignment can only be performed when having mentioned (in alignment instructions) equipment.
Limited repair can be exercised if defective circuit is in the area that no alignment is needed.
If defective part is in circuitry where alignments are necessary, two things can be done:

- Swap panel by a new one.
- If alignment equipment is available, module can be aligned according described alignment-instructions.

Frequency Deviation Level of Transmitter

1. Insert on test points R1 (= F103) and R2 (=F106) a sine wave signal of 400 Hz with a amplitude of 3 V_{RMS}.
2. Align potmeter 3157 such, that the frequency-deviation is 75 kHz (+/- 5 kHz). This corresponds with a amplitude of 80 mV_{RMS} (230 mV_{PP}) on testpoint R11 (=F112).

8.3.7 Alignments on the Surround Receiver Module (diagram U)

Surround Receiver Component Side

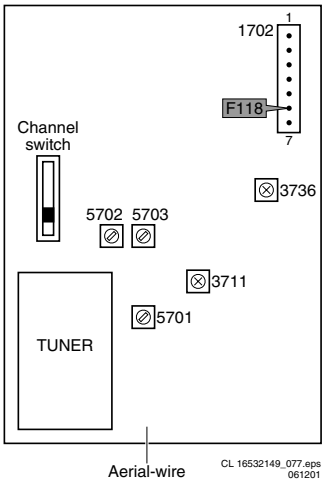

Figure 8-6

This alignment can only be performed when having mentioned (in alignment instructions) equipment.
Limited repair can be exercised if defective circuit is in the area that no alignment is needed.
If defective part is in circuitry where alignments are necessary, two things can be done:

- Swap panel by a new one.
- If alignment equipment is available, module can be aligned according described alignment-instructions.

Note: the aligned components are lacquered, so clean them first.

Alignment of FM-Detection Coil

Use a RF-generator as source: 1 mV, modulation 75 kHz.

1. Dependent of the receiver-version, place receiver on channel 4 (433, 926, or 864 MHz).
2. Align coil 5701 such, that a maximal audio frequency is detected at test point U6 (= F114).
3. Now swap the generator from frequency -150 kHz to +150 kHz, with the same amplitude and modulation.
4. Align 5107 such, that the ‘stop’ pulse (at F104, cathode of 6701) is symmetrical around 10.7 MHz (low value is < 0.3 V, high value is > 3.5 V.

Alignment of Tuned/Mute Level

Use a RF-generator as source: 3 to 7 μV, modulation 75 kHz.

1. Dependent of the receiver-version, place receiver on channel 4 (433, 926, or 864 MHz)
2. Align potmeter 3711 such, that mute-level is down at 3 μV and high at 7 μV at pin 6 of connector 1702 (=F118).

Alignment of VCO-Demodulator

Use a RF-generator as source: 1 mV, unmodulated.

1. Dependent of the receiver-version, place receiver on channel 4 (433, 926, or 864 MHz).
2. Align potmeter 3736 such, that you measure 100 kHz (+/- 300 Hz) at test point F131 (pin 11 of TDA1578A).

8.4 Software Alignments

Put the set in the SAM mode (see chapter 5). The Service Alignment Menu will now appear on the screen.
Via 'Alignments' the following submenu's can be selected:

1. **General:** all non-geometry related adjustments.
2. **Normal Geometry:** General geometry alignments.
3. **Super Wide Geometry:** Geometry alignments for the 'Panorama' position in 16:9 sets.
4. **Options:** Setting the initialisation codes in the TV via menu's.
5. **Option Numbers:** All options together, expressed in two long numbers. The original factory setting for these numbers can be found on the picture tube sticker on the inside of the set.
6. **Store:** Store all alignments.

Notes:

- **Important:** Once you have completed the alignments/ settings, select the item 'Store' (in main Alignment menu) to save all the values in the permanent memory of the set.
- If you changed and stored the Option codes, switch the set 'off' and 'on' with the mains switch. This, to activate the new settings. When switching via Stand-by, the option code settings are NOT read by the microprocessor.
- If an empty EAROM (permanent memory) is detected, all settings are set to pre-programmed default values.
- A built-in test pattern can be called up in some sub-menus. You can activate this pattern via the 'Test pattern on/off' item. The test pattern only appears AFTER the specific alignment is selected. The test patterns are generated by the Teletext-IC (OTC).

The alignments are explained now in the sequence of the sub-menu.

8.4.1 General

Drive

Method 1 (with colour analyser)
1. Go to the SAM 'Alignments - General - Drive' menu
2. Switch the 'Test pattern' to 'on' (you get a white block in middle of the image now).
3. Set 'Tint' to 'Normal'.
4. First, align the 'Cathode parameter'. This value is dependent of the picture tube size (see table 'Cathode parameter' for the colour-analyser readings).
5. Now, set the white levels for the three Tint-settings 'Normal', 'Warm' and 'Cool'. Align to the next values (see table 'White levels').

Table 8-4

CRT size/type	Light output (cd/m^2)
28" RF WS	390
32" RF WS	370
36" RF WS	330

Table 8-5

	Cool	Normal	Warm
X	280	289	314
Y	287	299	329
Temp. (K)	10200	8700	6500

Method 2 (without colour analyser)
1. Even without having a colour-analyser you can set some parameters. This is the next best solution. These parameters are average values coming from production (statistics).
2. Set 'Tint' to 'Normal'.
3. First, set the 'Cathode parameter' to the value '5'.
4. Now set the R-, G- and B-parameters for the three tint-settings 'Cool', 'Normal' and 'Warm'. See table 'Tint-settings' below for the values.
   Note: These values are only for the 32" CRT. At the moment of writing, the information for the 28 and 36" CRTs was not yet available. As soon as they are available, we will publish a 'Service Information'.
5. **Red BL offset**: herewith the Black Level can be aligned very precise. Default value is '7'.
6. **Green BL offset**: herewith the Black Level can be aligned very precise. Default value is '7'.

Table 8-6

32" CRT	δ Cool	Normal	δ Warm
R	-1	40	+ 2
G	0	29	0
B	+ 4	34	- 10

Luminance Delays
With the 'Luminance delays' alignment the luminance information is placed on the chrominance information (brightness is pushed onto the colour). Use a colour bar/grey scale pattern as test signal.
- **Lum. Delay PAL**: Apply a PAL colour bar/grey scale pattern as a test signal. Adjust 'Lum. Delay PAL' until the transients of the colour part and black and white part of the test pattern are at the same position.
- **Lum. Delay SECAM**: Apply a SECAM colour bar/grey scale pattern as a test signal. Adjust 'Lum. Delay SECAM' until the transients of the colour part and black and white part of the test pattern are at the same position.
- **Lum. Delay Bypass**: apply a NTSC colour bar/grey scale pattern as a test signal. Adjust value until the transients of the colour and black & white part of the test area are at the same position.

EHT Compensation
Fixed setting: 0

Soft Clipper
Fixed setting: Pwl + 0%

Luma Gain
Fixed setting: 1

IF AFC
The SAM-mode is needed to make alignment, a test generator to make signal and the Installation-menu to check the 'Fine Tune' value.
Supply, via a video generator (e.g. PM5518), a TV-signal with a signal-strength of at least 1 mV and a frequency of 475.25 MHz. Use BG if possible, otherwise match the system of your generator with the received signal in the set.

Alignment procedure:
1. Go to the 'Installation' menu.
2. Select 'Manual installation'.
3. Tune the TV-set to the system and frequency described above via 'Search - 475 - OK'.
4. If the frequency showed in the line 'Fine tune' is between 475.18 MHz and 475.31 MHz, you don't need to re-adjust the IF-AFC.
5. If not, adjust the frequency in the 'Fine tune' line to 475.25 MHz and 'Store' the program (this is very important because this will disable the AFC algorithm).
6. Now go to the SAM and select 'Alignments - General - IF AFC'.
7. During the 'IF AFC'-parameter adjustment, one can see OSD feedback in the top of the screen. The OSD feedback can give 4 kind of messages:

Table 8-7

AFC-window	AFC-frequency vs. reference
Out	High
In	High
In	Low
Out	Low

The first item ('In' or 'Out') informs you whether you are in or out the AFC-window.
The second item ('High' or 'Low') informs you about whether the AFC-frequency is too high or too low.
1. First you must align the 'IF AFC'-parameter such that you come into the AFC-window (= 'In')
2. Then you must look for the point where the 'IF AFC'-parameter changes from High to Low. This level is the value you are looking for.
3. After adjustment 'Store' the value.
4. Now return to the 'Installation' menu.
5. Select 'Manual Installation - Search - 475 - OK' and 'Store'. This will set the AFC 'on' again.

Service-Tip: If you do not trust the accuracy of the frequency of your Service-generator, first 'measure' with 'Fine tune'-line (manual install-menu) of a good set your video generator.

Tuner AGC
1. Supply a TV-signal, with a frequency of 475.25 MHz and a signal-strength of about 2 mV.
2. Measure the DC-voltage on pin 1 of the Tuner (position 1200). With the 'Tuner AGC'-alignment in the SAM-menu, this voltage can be aligned.

3. Alignment is correct when the DC-voltage is just below 3.8 V.

Blend Intensity
Use this alignment when the micro controller or HOP-IC has been replaced.
It aligns the level of transparency of the menu-picture blended into the main-picture.
1. Position the BRIGHTNESS-, CONTRAST- and COLOUR setting in the middle position (picture-menu).
2. Apply a signal with a 100 % white video-pattern.
3. Connect an oscilloscope to pin 7 of connector 0340 of the CRT panel and measure the Red output level.
4. Align 'blending intensity'-parameter such, that the blended signal is 65 % of the black-white amplitude. Practically this will be about 1.3 V (blended signal) versus 2 V (full white signal). The parameter is adjustable between 0 and 31.

Adjust Peak White Limiter
Enter for all picture tubes the value '4'.

Vg2 Test Pattern
Here, you can activate the Vg2 Test pattern. See paragraph 'Hardware Alignments' for a description.

VDS/PIP (optional)
With this adjustment, you can set the following parameters (which are stored in the local memory IC7991):
- **IF AFC.** This alignment is identical to the one described above.
- **Tuner AGC**. See description below:
  1. Supply a video signal, with a frequency of 475.25 MHz and a signal-strength of about 2 mV to the set.
  2. Measure the DC-voltage on pin 1 of the tuner 1102 (easiest way is to measure on SMD capacitor C2116, just underneath the tuner).
  3. Align the voltage via the menu. The alignment is correct when the DC-voltage is just below 3.8 V

8.4.2 Normal Geometry

Note: Use for all geometry alignments an **external** pattern generator with a geometry pattern (e.g. crosshatch).

Geometry Alignments

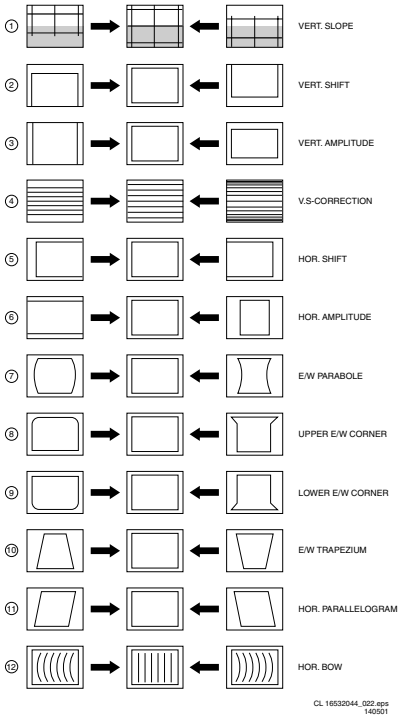

Figure 8-7

Vertical Slope
This alignment is meant to align the zero crossing of the frame-deflection to the mechanical middle of the picture tube.
1. First set the start conditions for 16:9 sets: '**V. S-correction**' value on '0' for the 28" sets, and '9' for the 32" and 36" sets. Position the boundary-stripes of the test pattern on the edges of the picture tube.
2. Align '**V. slope**' (during alignment the below-half of the picture is blanked). Match the middle line of the test pattern with the upper edge of this blanking picture. Push the MENU button again, to return to the previous menu.

Service tip: When the set is equipped with a rotation coil, use this menu item to check its correct alignment. If alignment is not correct, go to the INSTALLATION menu, choose SETUP, press OK, and choose PICTURE TILT. With the use of a crosshatch test pattern, align it to a correct horizontal picture.

Vertical Amplitude and Centring
1. Use '**V. amplitude**' to align the vertical amplitude so that the entire test pattern is visible.
2. Use '**V. shift**' to align the picture vertically in the middle.
3. Repeat the '**V. amplitude**' alignment if necessary.

Vertical S-correction
Align '**V. S-correction**' such that a block at the top of the picture has the same height as a block in the middle of the picture.

Horizontal amplitude and centring
1. Use '**H. amplitude**' to align the horizontal amplitude so that the entire test pattern is visible.
2. Use '**H. shift**' to align the picture horizontally in the middle.
3. Repeat the '**H amplitude**' alignment if necessary.

Note: If you cannot compensate the drift in the horizontal shift, go to the next subject 'DC-shift'.

DC-shift
In case the horizontal linearity in wide-screen mode is out of tolerance, add a 'DC-shift correction' panel (3104 328 00641) to connector 0393 on the LSP (see figure below).
Caution: Be sure to switch 'off' the set first. On this DC-shift panel, cut position 9031 for correction to the right or cut position 9030 for correction to the left.
Caution: never plug in a not pre-aligned module in a set !!!

DC-shift Connector

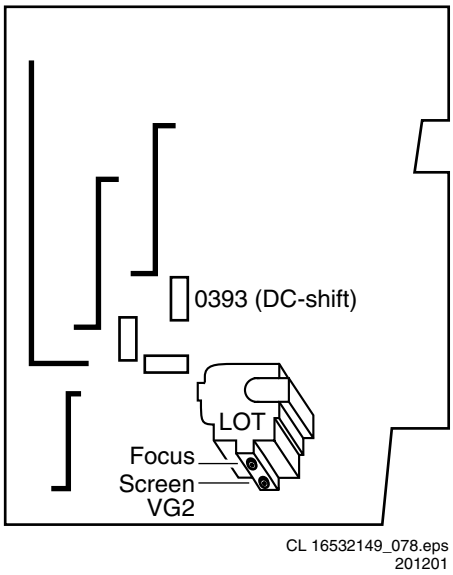

Figure 8-8

In 32" and 36" sets, an **adjustable** DC-shift feature is always present. This is located on the DAF panel (potentiometer 3050). How to align:

1. Increase BRIGHTNESS to '45' (3/4 of scale).
2. Set DC-shift potmeter (item 3050 on DAF module) at midway. Maybe it is necessary to unhook the DAF module first, in order to access this potmeter (see chapter 4).
3. Apply a circle as test pattern.
4. Enter the SAM, choose ALIGNMENTS, and NORMAL GEOMETRY.
5. Write down the H. AMPLITUDE value.
6. Reduce H. AMPLITUDE until overscan and grey zones at the left and right are well visible.
7. Adjust H. SHIFT until picture is positioned symmetrically in the grey zone.
8. Recall the H. AMPLITUDE value.
9. Turn potmeter 3050 on the DAF module, until the picture edges are just visible.
10. Store the new value for H. SHIFT into the NVM (via the main Alignment menu).

East/west alignment

1. Use '**East/West Parabola**' to align the vertical lines until straight.
2. Use '**Upper East/West corner**' to align the vertical lines in the upper corners until straight.
3. Use '**Lower East/West corner**' to align the vertical lines in the lower corners until straight.
4. Use '**East/West Trapezium**' to align for a rectangular.
5. Use '**Horizontal Parallelogram**' to align for straight vertical lines if necessary.
6. Use '**Horizontal Bow**' to correct the E/W parabola such that it becomes symmetrical.

Repeat steps 1 to 6 if necessary.

8.4.3 Super wide geometry

You only need to set the following values (if the normal geometry alignment has been performed correctly):

- **V. shift:** enter here the value of the 'normal geometry' alignment.
- **V. amplitude:** adjust image such that the outer vertical lines are just visible.
- **V. S-Correction:** enter here the value of the 'normal geometry' alignment.
- **H. amplitude:** enter here the value of the 'normal geometry' alignment subtracted by 2.
- **E/W Parabola:** enter here the value of the 'normal geometry' alignment.

8.4.4 100Hz Geometry

As all alignments are done in Pixel Plus mode @ 75 Hz, the 100 Hz mode needs an extra alignment:

- Select '**100Hz Geometry**'. The set automatically switches to 100 Hz mode.
- **V. slope:** Match the middle line of the test pattern with the upper edge of this blanking picture. Push the MENU button again, to return to the previous menu.
- After the alignment, return to the previous menu. The set automatically returns to 'Pixel Plus' mode.

9. Circuit Descriptions, Abbreviation List and Data Sheets

Index of this chapter:
1. Introduction
2. Power Supply
3. Video Path
4. Feature Box 7
5. Auto Scavem
6. Wireless Surround Amplifier
7. Abbreviation List
8. IC Data Sheets

Note:
- Only **new** circuits (compared to the MG3.1E) are described. For the other circuit descriptions, see the training manual of the MG3.1E. This manual is available in different languages:
  - 3122 785 10007 = English (GB)
  - 3122 785 10008 = Dutch (NL)
  - 3122 785 10009 = German (D)
  - 3122 785 10011 = French (F)
  - 3122 785 10012 = Italian (I)
  - 3122 785 10013 = Spanish (E)
- Figures can deviate slightly from the actual situation, due to different set executions.
- For a good understanding of the following circuit descriptions, please use the diagrams in chapter 6 and 7. Where necessary, you will find a separate drawing for clarification.

9.1 Introduction

In the MG3.2E, a high-resolution mode is introduced, in order to obtain a sharper picture. This feature is called ‘Pixel Plus’. It includes the following changes:
- A new 'Feature Box version 7' (FBX7), which contains the ‘Eagle’ IC. This IC is responsible for the definition improvement.
- With ‘Pixel Plus’, the pixels in horizontal direction are doubled.
- The number of vertical lines per picture is increased to 833, which improves the vertical definition.
- The frame deflection works on 75 Hz (which is the best compromise without introducing flicker).
- The signal bandwidth from FBX7 to picture tube is increased, in order to be able to cope with these high definition signals.
- A new Scavem circuit is necessary for the higher definition. This Scavem is dependent of the used picture tube and the picture content, and is controlled by the AutoTV algorithm. That is why it is called ‘Auto Scavem’.

In addition, the Top Power Supply is adapted, so it can deliver more power.

In the 'Digital Options' menu, you now have three options:
- Digital Scan (100 Hz)
- Pixel Plus (75 Hz)
- Double Lines (50 Hz).

In all modes, the line frequency is 31250 Hz. Pixel Plus is the preferred mode. That is why the optimal geometry of this chassis is set for 75 Hz.

Standard OSD is developed for 625 lines. Therefore, in 833 lines mode, this will give smaller fonts and a different screen position. To solve this, larger fonts are used.

In 'TXT' and 'TXT Double Window' mode, the set is switched to 'Natural Motion'. For subtitles 'Pixel Plus' is used, this will result however in somewhat smaller fonts. In 'Full Double Window' mode, the set is in 'Pixel Plus' mode.

9.2 Power Supply (Diagram B)

There are two important changes on the Top Supply Panel (TSP):

The mains harmonic coil (item 5280) is now mounted directly on the supply board, i.s.o. using an external 'Mains Harmonic' unit.

The 8V6 and 5V2 supplies have to deliver more power. This is accomplished in the following way. The existing DC/DC converter MC34167 was not able to deliver a higher output current and had a rather high working temperature. Therefore, it is replaced by another type, the L4977A (item IC7211). This IC uses the same working principle, but has a higher maximum output current, and works at a lower temperature. However, it needs a higher supply voltage of 24 V_{DC} (i.s.o. 16 V_{DC}). This higher supply voltage is achieved by changing transformer T5202. The output voltage of the converter is determined by the value of R3230 and 3231. A disadvantage of the new DC/DC converter is that it needs more external components, and therefore needs more space. This extra space is found by changing the Standby Supply circuitry. This change involves the replacement of items TS7100 to 7103 by a single TNY256 IC (pos. 7103). This IC generates drive-pulses for transformer T5101. The maximum frequency is 132 kHz at full load, and decreases with smaller loads. The working principle of this IC is called 'cycle skipping'. It implies that the IC supplies a pulse train, to which cycles are removed or added, hereby changing the output frequency. One disadvantage of using this IC is the increased chance of introducing picture spook. Therefore, capacitors 2101 and 2106 are added, to minimise this effect. Regulation of the 5 V Standby voltage happens as before (via opto-coupler 7104). If this feedback circuit is interrupted, the IC starts to work in an open loop configuration, and the output voltage will rise rapidly to 12 V. To prevent this, an Over Voltage Protection (OVP) circuit is added (thyristor 7106 and zener 6108). If the 5 V Standby voltage exceeds the zener voltage (6.8 V), the thyristor is triggered, and will limit the output voltage.

9.3 Video Path

9.3.1 Power Supply Tuner (Diagram K1)

The power supply of the Tuner is now controlled with a voltage stabiliser (item IC7113). This is done, to assure a more accurate power supply to the tuner.

9.3.2 Anti-Plop Circuit (Diagram K3)

Anti-plop

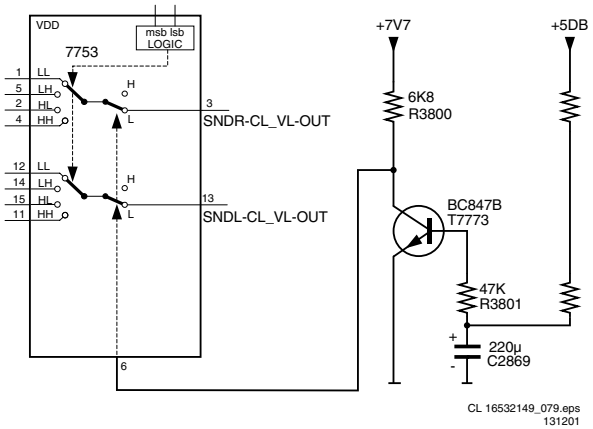

Figure 9-1

As capacitor C2869 is not charged at power start-up, transistor TS7773 will block and pin 6 of audio switch IC7753 is 'high'. This means that the sound is muted. After charge-up, TS7773 will conduct and the audio signals are passed.

9.3.3 RGB Path (Diagram F)

RGB signal path

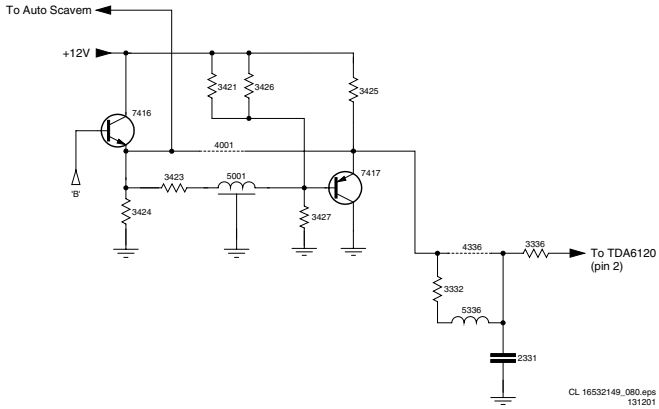

Figure 9-2

The RGB signals from the HOP are fed to three identical amplifiers (TDA6120). We take one of them (B, item 7330) as example for the description. After emitter follower TS7416, the signal is tapped for the Auto Scavem circuitry, and is fed to TS7417. This emitter follower sends the signal, with the same DC-voltage, to the amplifier. In order to cope with the higher definition, this IC has a larger bandwidth (20 MHz) as the one used in the MG3.1E.

9.4 Feature Box 7 (Diagram L)

The objective for this chassis is was, to reach a sharper picture by means of a higher definition.
This is achieved via the so-called 'Pixel Plus' feature. So, what is Pixel Plus?

9.4.1 Introduction

In the Feature Box 7 (FBX7), a new IC is used, called the 'Eagle'. This IC does the following picture improvements:

- Horizontal: increases from 840 to 1680 pixels per line (the number of pixels is doubled per line). This, by itself, does not mean an improvement in definition however. To achieve that, the new pixels are digitally processed inside the Eagle with Luminance Transient Improvement (LTI) and Peaking. This will give the new pixels extra picture information, which results in steeper slopes and contrast improvement at details.
- Vertical: increases from 625 lines (PAL) to 833 lines. Also, those new lines are processed inside the Eagle with LTI and Peaking, again resulting in lines with extra picture information.
- The line frequency is fixed on 31250 Hz and the frame frequency at 75 Hz (this will give no frame-flicker). Also, other modes, like 'Digital Scan' are still possible.
- The colour enhancement features of the TOPIC are done by the Eagle.

9.4.2 Block diagram

FBX7

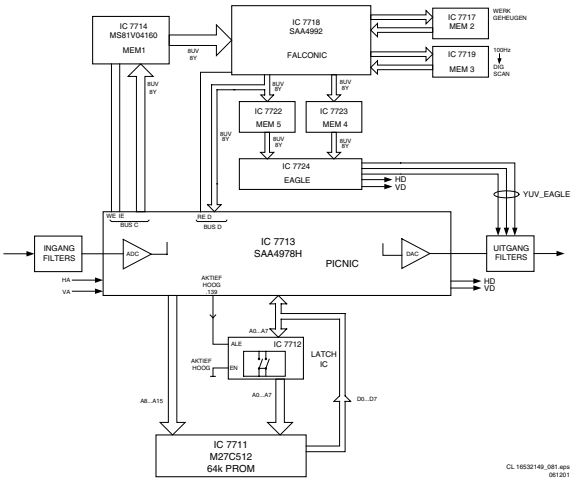

Figure 9-3

The 50 Hz YUV signals, coming from the HIP, are fed to the PICNIC via an anti-aliasing filter.
The (AABB) frame frequency doubling is done by the PICNIC (SAA4978, 160 pins QFP) together with a field memory (MEM1). This IC can handle most 100 Hz functions (except Progressive Scan).
This PICNIC has an internal CPU and a (small) integrated ROM. The actual FBX7 software is located in an external ROM (item 7711). In order to limit the number of connections between the PICNIC and the external ROM, a number of lines are used twice. The lines A8 to A15 are fixed lines, while the lines A0 to A7 are made switchable with the eight data lines of the ROM. This is done via a Latch (item 7712), which is controlled by pin 139 of the PICNIC (the ALE signal).
Via bus 'C', a digitalised signal is presented to MEM1, which is used for the 50 to 100 Hz conversion. The signal goes further via the data-bus to the FALCONIC. This IC has the following functions:

- Line flicker reduction.
- Digital Noise Reduction (DNR).
- Progressive scan (262.5 - 525 or 312.5 - 625 lines per frame).

At the end, the digital YUV signals enter, via MEM4 and MEM5, the Eagle IC.
This IC has the following functions:

- Luminance Transient Improvement (LTI).
- Peaking.
- Programmable number of lines.
- Programmable number of pixels per line.
- Demo mode (split screen).
- Improved colour transients (CTI) and colour enhancement (TOPIC).
- Improved vertical zoom.

The digital YUV-signals from the Eagle go, via a passive output filter, to the HOP.

As only the Eagle IC is new, it is described below in more detail. For a detailed description of the other ICs, please check the training manual of the MG3.1E.

9.4.3 Eagle (Diagram L2)

Introduction
Some strong picture improvements are carried out inside the Eagle, which all contribute to the excellent picture quality. These improvements are:

- LTI (both horizontal and vertical).
- CTI (only horizontal).

- Peaking (both horizontal and vertical).
- More pixels per line.
- More lines per frame.
- Better colour transitions.

By means of over sampling, the video signals get a sample frequency of 64 MHz, a bandwidth of 20 MHz, and 1680 pixels per line (was 32 MHz, 10 MHz and 840 pixels/line). This requires two extra field memories (MEM4 and MEM5).

The Eagle can handle four different modes:
- **Digital Natural Motion (PAL)**:
  100 Hz, 2fH, 2:1 Interlace (1680 pixels x 625 lines)
- **Pixel Plus (PAL)**:
  75 Hz, 2fH, 2:1 Interlace (1680 pixels x 833 lines)
- **Double Lines (PAL)**:
  50 Hz, 2fH, 2:1 Interlace (1680 pixels x 1250 lines)
- **Pixel Plus (NTSC)**:
  60 Hz, 2fH, 2:1 Interlace (1680 pixels x 1050 lines)

LTI (Luminance Transient Improvement)
The main objective of LTI is a steeper slope at contrast transitions (e.g. from 10 mV to 900 mV within 3 pixels i.s.o. 5 pixels for one detail). It is based on waveform altering around a signal jump.

Important: The LTI, as used in the Eagle, is designed for interpolated picture contents. This means that for pixel/line doubling, one of the two pixels/lines is an interpolated value. When a picture jump is interpolated, you will get extra room to make it steeper (you get extra pixels to describe the slope). Without interpolation, you cannot use this kind of LTI.
- LTI can add 'ears' to the waveform at the jump (a kind of controlled overshoot).
- LTI 'estimates' the frequency of the jump and will adapt the amplification to this frequency.
- LTI is applied both horizontal as vertical.
- LTI is amplitude dependent. This means that only 'big' jumps are processed. It works with a threshold, which is coupled to the noise meter via the Auto TV software.
- LTI is also frequency dependent. This means that it is distributed over the slopes. When there are many steep slopes in the signal, LTI will only process the steepest ones. If there are only a few slopes, LTI will process all of them. This is fully hardware implemented.

Horizontal LTI

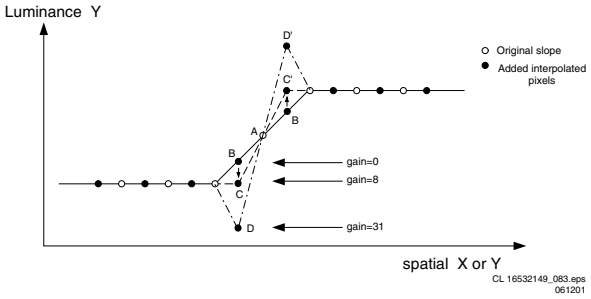

Figure 9-4

For horizontal LTI, the number of pixels is doubled (64 MHz) by means of interpolation. Pixel A at the transition will keep its luminance value, while the (new) pixels B can have a luminance value of zero to max. 31. For example:
- Pixels B can keep the same value (gain = 0)
- Pixels B can get the value of C and C' (gain = 8), which will give a steeper slope.
- Pixels B can also get the value of D and D' (gain = 31), which will give an even steeper slope with the so-called 'ears'. These 'ears' will give a **contrast** improvement.

For CTI, the same principle is used, in order to get better **colour** transitions.

Vertical LTI

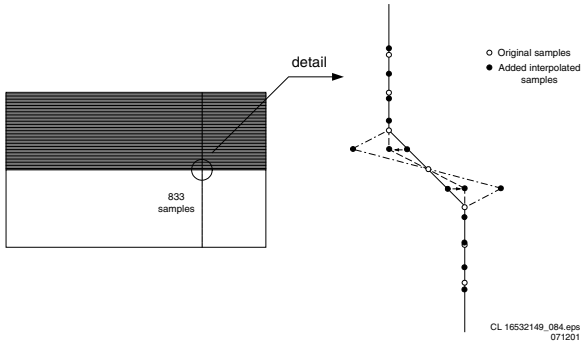

Figure 9-5

The principle for vertical LTI is the same as for horizontal LTI. The shift from 625 to 833 lines is done by means of a scaler. With these extra interpolated samples, it is possible to create steeper slopes, possibly with 'ears'.

Peaking/Coring
The objective of 'peaking' is contrast improvement (e.g. from 50 to 70 mV_{PP} for one detail).
It uses a noise threshold (coring = non-linear filtering around zero-level), thus it works everywhere in the picture (except below the threshold level).
The added difference signal is frequency dependent, which results in frequency dependent contrast improvement. When the difference signal becomes too large, the peaking is reduced (smartness).

Peaking

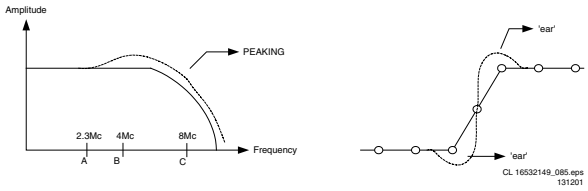

Figure 9-6

To obtain above shown filter characteristic, filters are set at three parameters (A, B, and C). In this way, only the higher frequencies are 'lifted'. After sending the luminance signal through these filters, the filter output is added to the original signal. In this way, the so-called 'ears' are created, together with the steeper slopes. These 'ears' will give a **contrast** improvement at details.

Both horizontal and vertical peaking is **amplitude dependent**: the higher the signal jump, the lower the peaking. This is done to avoid that high jumps get big 'ears', because this will introduce nasty contouring. To avoid peaking on noise levels, coring is used. The coring threshold is set via the Auto TV software, by means of the noise meter.
Therefore, the result is that **only details** are processed by the peaking.

The horizontal peaking is also **frequency dependent**: it is possible to perform peaking around three frequencies (when combined, it is even possible to peak at variable frequencies). In Auto TV, this feature is software coupled to the sharpness meter, in order to get the most optimal filter characteristic.
The vertical peaking works on a fixed frequency.

Colour Enhancements
In the FBX6 (as used in the MG3.1E), the TOPIC handled the colour enhancement features, such as: 'skin tone correction', 'blue stretch', and 'green enhancement'. In the new FBX7, all this is done by the Eagle IC.

Power Supply and POR

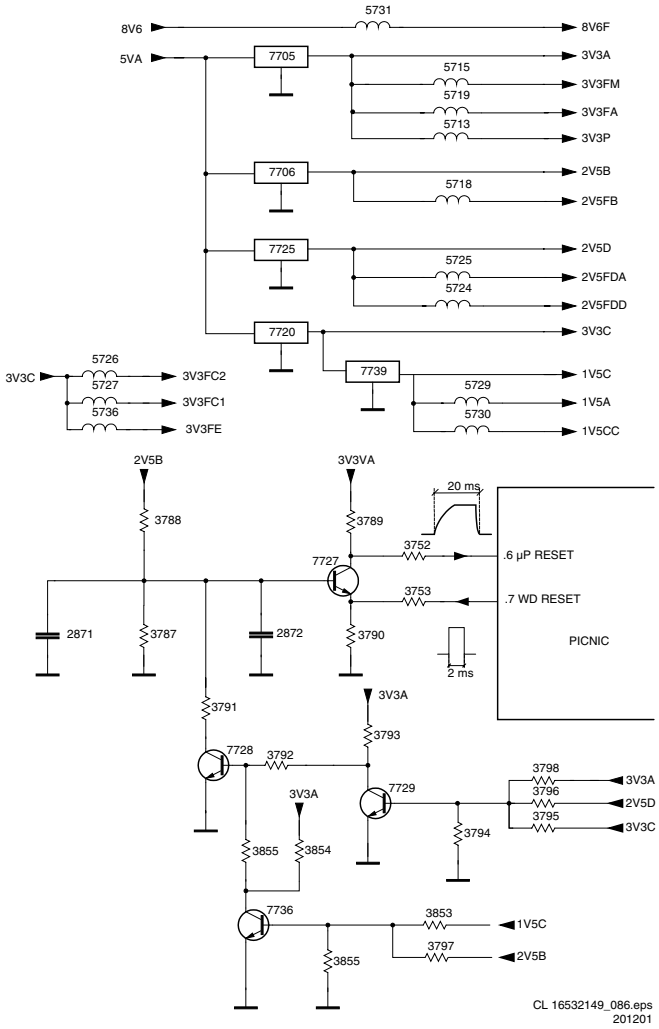

Figure 9-7

Besides the two incoming voltages 8V6 and 5V2, also five voltage stabilisers are used to derive the necessary voltages. This is done for power consumption reasons.

Via a reset circuit (TS7727) a reset pulse (POR) of 20 ms is generated for the µP inside the PICNIC and for the ROM. After 'power on', the 3V3 is built up (derived from the 5V2). Transistor TS7727 blocks and pin 6 of the PICNIC will follow the rising slope of the power supply. As soon as the power supply is stabilised, capacitor C2872 will charge (via R3788). When this voltage reaches 0.6 V (after 20 ms), TS7727 starts to conduct, and the voltage at pin 6 goes low again. The µP is reset now. If the PICNIC cannot communicate with the ROM, the 'watchdog' will generate a reset pulse (on pin 7), which will re-start the cycle again.

If one of the power supplies is absent (or too low), then a safety problem can occur in some cases (e.g. a too high temperature of the stabiliser). To prevent this from happening, the voltage dividers at the bases of the transistors TS7729 and TS7736, are calculated such that they will block when above described situations occurs. In this case, the base of TS7727 is kept 'low' by the conducting TS7728, until the problem is solved. The µP receives no POR pulse, and cannot be reset.

Output

The YUV signals presented to the HOP come from the Eagle. These three signals have all the same circuitry so it is explained once (for Y).

YUV Output Filter

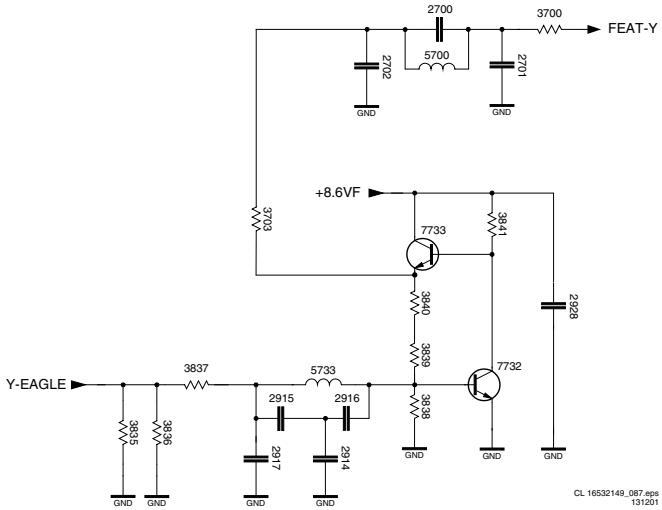

Figure 9-8

The YUV signals are first filtered by a 64 MHz passive filter (L5733 and C2914-2917). Because the output signals from the Eagle are too small to drive the HOP directly, they are amplified by the circuit around TS7732 and TS7733. The gain is determined by R3839, R3840, and R3837. For the Y-signal the gain is 2, for the U-signal it is 1.33, and for the V-signal it is 1.05.

9.5 Auto Scavem

9.5.1 Introduction

To improve the sharpness, the Scan Velocity Modulation (Scavem) circuit modulates the deflection speed as a function of the picture contents. This feature uses a separate Scavem deflection coil.
Auto Scavem is introduced, to be able to display the high definition signal from the FBX7. As the Scavem circuit is now controlled by the Auto TV software, it is called Auto Scavem. The circuit, with the Scavem amplifier, is located on a separate PWB (in front of the SSP), and is connected to the picture tube panel.

9.5.2 Normal Scavem

Block diagram

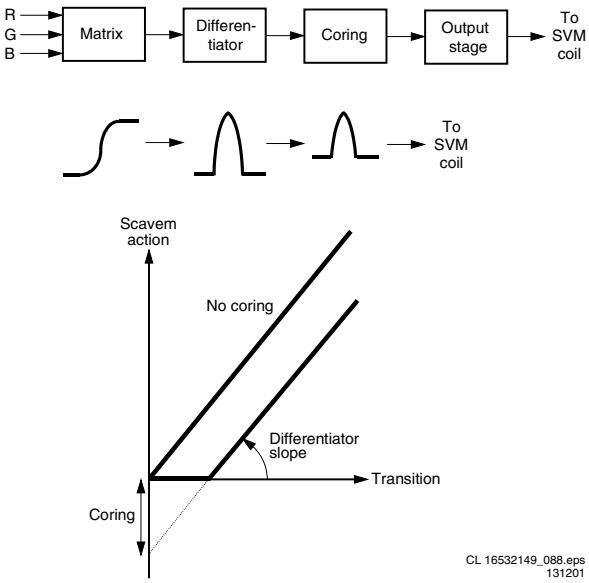

Figure 9-9

With normal Scavem (as used in the MG3.1E), the RGB signals are added together and differentiated before they drive the Scavem coil. The coring block prevents that Scavem processing is done on low signal levels.

9.5.3 Auto Scavem (Diagram SC)

Block diagram

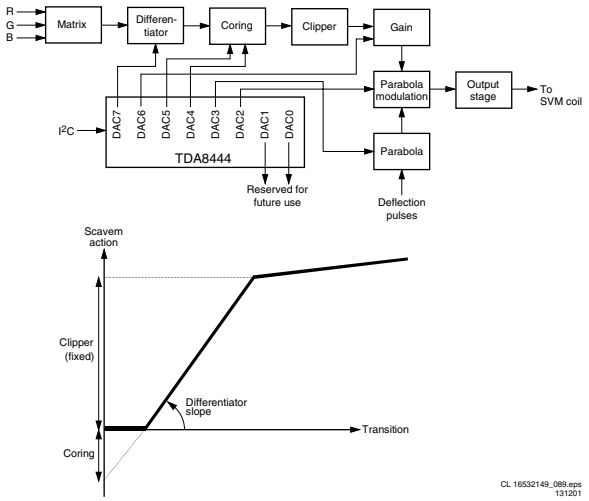

Figure 9-10

This new Auto Scavem circuit include some extra blocks:
- Clipper
- Parabola modulation

Auto Scavem is fully software controlled, by means of I²C. The speed, at which Auto Scavem is adapted, is controlled by the Auto TV algorithm. This adaptation takes place together with the FBX initialisation, and takes about 1 second. The different circuit stages are controlled via a DAC (item 7500, TDA8444). The new Auto Scavem circuitry also produces higher Scavem currents, which results in sharper pictures. For the circuit description, we splitted the circuit in eight stages.

Matrix and Differentiator

Stage 1 and 2

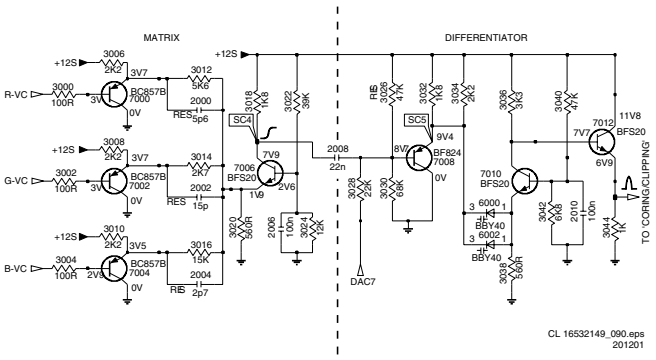

Figure 9-11

The RGB signals are added via transistors 7000, 7002 and 7004, on the emitter of transistor 7006. This is done via resistors 3012, 3014, and 3016, which have a different 'weight' factor. This, to regain the luminance signal.

The next circuit is the differentiator. The combined signal enters this circuit at the base of transistor 7008. The DC-level of this transistor is controlled by the DAC7 line, which is dependent of the 'sharpness meter' reading in the Auto TV algorithm. By means of this control signal, the voltage and capacity of varicap diode 6000 is altered, which will adapt the differentiator.

The slope of the differentiator is controlled by this DC-level. The differentiation itself is done by varicap diode 6000. Output signal goes from the collector of transistor 7010 via emitter follower (= buffer) 7012, to the next stage.

Coring/Clipping and Gain

Stage 3 and 4

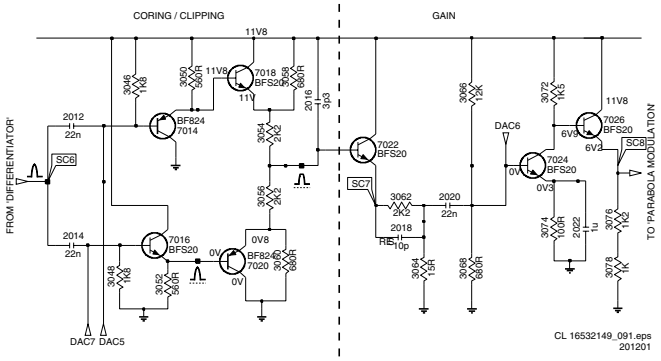

Figure 9-12

The coring circuit (items 7014 and 7016) prevent Auto Scavem on the lowest signal levels (= noise), while the clipper circuit (items 7018 and 7020) always give the same amount of Scavem above a certain level.
The levels at which this must happen, are controlled by the DAC4 and DAC5 lines, and are dependent of the 'noise meter' reading in the Auto TV program.

The input signal enters this circuit at emitter follower 7022, and is strongly attenuated via voltage divider R3062 and R3064. This, because the gain of transistor 7024 is set with the adjustable voltage divider of R3066, R3068 and R3070. The level at which this happen, is controlled by the DAC6 line, and is dependent of the 'sharpness meter' reading in the Auto TV program, the picture tube size, and the sharpness setting by the customer.

Parabola Generation

Stage 5

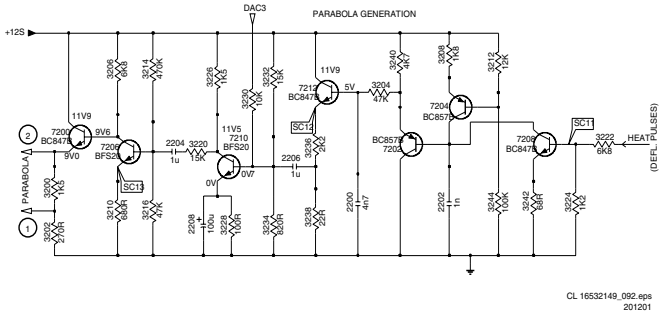

Figure 9-13

In addition, the Scavem signal is modulated with a parabola. This is necessary, because the picture tube is less sensitive for Scavem in the centre as on both sides.
On the CRT-panel, the 'heater' pulses are used to create a parabola on line frequency. This parabola is made with transistors 7204 and 7206. The DC-level of these transistors is controlled via the DAC3 line. In this way, you can control the parabola via software. The level is dependent of the 'sharpness meter' reading in the Auto TV program, the picture tube size, and the sharpness setting by the customer.

Parabola Modulation and Pre-amplifier

Stage 6 and 7

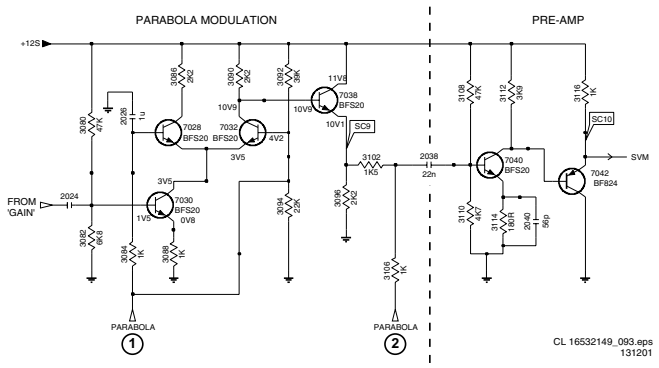

Figure 9-14

The Scavem signal enters at the base of transistor 7030. Transistors 7028 and 7032 are complementary. Normally, the same current goes through both components, but because on one of them (7028) the parabola signal is offered, the Scavem signal is now modulated and inverted.
After buffer 7038, the parabola signal is again added to the (now inverted) signal, so that only the modulated signal is available on the input of the pre-amplifier (items 7040 and 7042).

Pre-amplification is done via a voltage amplifier (7040) and an emitter follower (7042).

Final Amplifier (Diagram F)

Stage 8

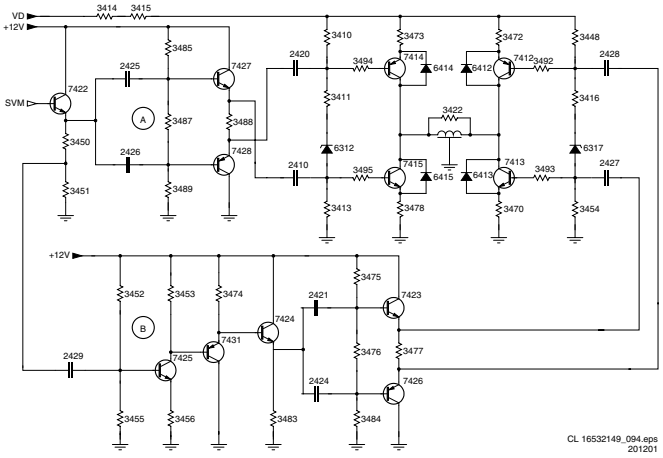

Figure 9-15

Finally, the Auto Scavem signal arrives, via emitter follower 7422, at stage [A] on the CRT panel. Transistors 7427 and 7428, together with power transistors 7414 and 7415, form the power amplifier, which can deliver the high Scavem currents. From the emitter of 7422, a signal is taken for stage [B]. This signal is **inverted** by transistor 7425 and buffered by 7431 and 7424. The next stage is identical to that of stage [A].
At a positive alteration of the Scavem signal, transistors 7427 and 7415 in stage [A] will conduct, while 7428 and 7414 are blocked. In stage 'B', the positive pulse is inverted, so transistors 7426 and 7412 will conduct, while both 7423 and 7413 are blocked. The Scavem current will flow now, via transistor 7412, through the Scavem coil and then through 7415.
During negative alterations, the current will flow through transistor 7414, the Scavem coil, and transistor 7413.

9.6 Wireless Surround Amplifier (Diagram W)

This module is also used in the MG3.1E, but the circuit was not described yet.

9.6.1 Block Diagram

Wireless Surround Amplifier

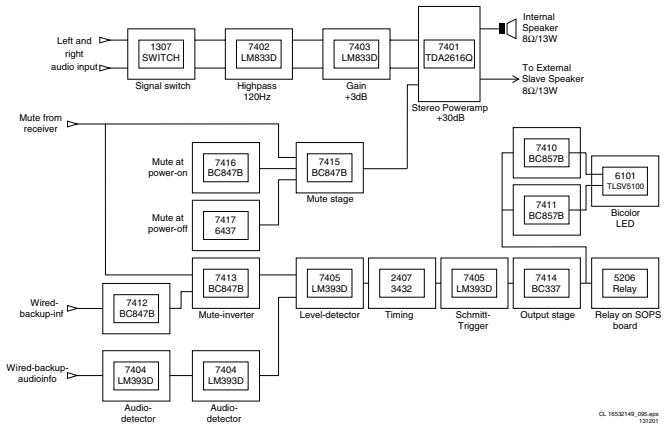

Figure 9-16

9.6.2 Amplifier (Diagram W1)

The used amplifier, TDA2616Q, is a stereo power amplifier with voltage gain of 30 dB. This power amp can deliver 2 x 12.5 W into 8 Ω load. Here the amplifier is used with a symmetrical power supply, therefore no output capacitors are necessary. To avoid oscillations, a so-called 'Boucherot network' (R3453-C2433, and R3452-C2434) is placed on both outputs.

The amplifier is powered by a symmetrical power supply. Main components are: the mains transformer, diodes 6407-6418, and capacitors 2404-2405. The measured ouput voltage varies between: +/- 14.5 and 19 V_{DC}. This depends of the delivered output power in both speakers (at nominal mains voltage).

IC7402 and all passive components around this part, form a high pass filter (-3 dB/120 Hz). This filter is implemented because the used box and speaker are not intended to reproduce low frequencies. A pre-amp, IC7403, gives an additional 3 dB gain to give the whole system the correct sensitivity.

The pre-amplifier and filter-part, work on a symmetrical power supply +/- 9 V_{DC}. These voltages are derived from the main supply with zenerdiodes 6401-6402, resistors 3401-3404, and capacitors 2402-2403

Mute
To ensure 'plop' free operation, some additional circuits are required. The power amp can be muted in three different ways by transistor 7415:

- **At 'power on'.** The circuit around 7416 gives a delayed at start-up, to allow the power supplies to become stable.
- **At 'power down'.** In normal operation, transistor 7417 is 'on', 7415 is 'off', and amplifier 7401 is enabled. At power down, the transistor 7417 is fast switched 'off', 7415 is 'on', and the amplifier is muted before the power supplies become instable. Diode 6437 gives an additional mute when the relay switches off.
- **Mute from the receiver.** When there are perturbations and interferences during the transmission, the mute output line of the receiver (connector 1401 - pin 1) becomes 'high' (4 V_{DC}), and turns 'on' transistor 7415. This will mute the output amplifier.

Timing
When the transmission of AC3 surround signals is ended (e.g. television 'off'), the mute line from the receiver becomes 'high' and mutes the amplifier via TS7415. At the same moment, the output of 7405 becomes 'low'. Now, capacitor 2407 starts discharging into R3432. When the voltage on the positive input of the comparator becomes lower then the voltage on the negative input, the output of the comparator turns from 'high' to 'low' and the relay is switched 'off' by 7414. The established time is 11 until 15 minutes (RC-time R3432/C2407). If the mute line turns 'low' during this discharge period, the capacitor 2407 is charged again and the complete timing is reset.

Wired Backup
When there is no possibility to use the **wireless** link (due to perturbations or interferences), it is possible to use a 'wired' backup solution. On the rear of the box is a backup input. By plugging in a cable with 3.5 mm stereo jack (order under nr. 3104 311 02251), the power supply for the receiver is interrupted. The audio signal enters the amplifier now via this backup input. An audio detector (7404) is added on the amplifier board, to obtain the same functionality when we use the wired backup.
The level detector (7405) is then triggered by the output of the audio detector, i.s.o. the mute line coming from the receiver.

LED control
TS7410 and 7411 control the red or green part of a bicolour LED, according to the voltage on the collector of TS7414.

9.6.3 Power Supply (Diagram W2)

The box can operate in two different modes: 'standby' and 'active' mode.

- In the standby mode all power is delivered by a so-called standby SOPS. This is a self-oscillating power supply, which can deliver 12 V_{DC} for the receiver board and the timing circuitry. The delivered current in the standby mode is rather low, mainly because the receiver board has a 'sleep' period of 3 seconds, and a 'listen' period of 0.2 s.
- In active mode (relay 'on'), the main transformer bypasses the standby supply, and all the needed power is now delivered by this transformer (via diodes 6405-6406 and capacitor 2401). This is done to reduce dissipation in standby mode.

SOPS standby supply: a stable output voltage of 12 V_{DC} is obtained by use of a low-drop voltage regulator L4940V12. The feedback is formed with components R3201, 3204, 3205, 3206, and an optocoupler.
At primary side, there is a rectifier part that produces 350 V_{DC} (items 6206 and 2207). The SOPS is formed by the FET 7207, transformer 5204, current-limiter 7206, 6205, and 6210, a control circuit (7204, 7205, and 6207) and an optocoupler (7203). The whole system works always in 'burst' mode. When a higher current is necessary, the burst period becomes larger, and the burst-repeat frequency increases. The SOPS can operate on mains voltages between 90 and 264V_{AC}.
When the output voltage rises above 20 V_{DC}, (e.g. caused by a fault in the feedback system of the SOPS), the circuit around thyristor 6211 short-circuits the SOPS output. This gives a reliable protection for the whole circuit.

9.7 Abbreviation List

16:9-ARFRONT	16:9 aspect ratio input from side I/O
50Hz/60Hz	50Hz/60Hz mains frequency
6-CHANNEL DAC	6- Channel DAC
ADC	Analogue to Digital Converter
AFC	Automatic Frequency Control
AGC	Automatic Gain Control
AM/FM	Amplitude Modulation/Frequency Modulation
AM-SOUND	Amplitude modulated sound signal
AUDIO_C	Audio Centre
AUDIO_L	Audio Left
AUDIO_R	Audio Right
AUDIO_SL	Audio Surround Left
AUDIO_SW	Audio Subwoofer
AUDIO-L-PROC	Audio Left Processed
AUDIO-R-PROC	Audio Right Processed
AUDIO-SR	Audio Surround Right
AUX-SUPPLY	Auxiliary supply
BC-PROT	Beam Current Protection
BG	System B and G
BLC-INFO	Black Current Information
B-SC1-IN	Blue SCART1 in
B-SC2-IN	Blue SCART2 in
B-TXT	Blue teletext
B-vc	Blue from video-controller
C	Centre
C/16/9	Chrominance input
C-7-OUT	Chrominance on pin 7 SCART (variant)
CENTER	Centre speaker
C-FRONT	Chrominance front input
CL_DS_L	Constant Level Dual Screen Left
CL_DS_R	Constant Level Dual Screen Right
CL_L	Constant Level Left
CL_L_OUT	Constant Level Left out
CL_R	Constant Level Right
CL-R-OUT	Constant Level Right out
CODEC	Coding/Decoding
COMP	Compander ON/OFF
ComPair	Computer aided rePair
CORDL_L	Cordless Left
CORDL_R	Cordless Right
CORE TOP LEVEL	Core Top Level
CRT	Cathode ray tube
CSM	Customer Service Mode
C-UI	Chrominance UI
CVBS	Composite Video Blanking and Synchronisation
CVBS_Y-UI	CVBS Y UI
CVBS-PIP-DS	CVBS Picture In Picture dual Screen
CVBS-SC1-IN	CVBS SCART1 in
CVBS-SC2 OUT	CVBS SCART2 out
CVBS-SC2-IN	CVBS SCART2 in
CVBS-SC3-IN	CVBS SCART3 in
CVBS-SC4-IN	CVBS SCART4 IN
CVBS-TER	CVBS terrestrial
CVBS-TXT-DS-OUT	CBVBS Teletext Dual Screen out
CVBS-TXT-OUT	CVBS Teletext out
CVBS-Y-FRONT	CVBS Luminance front input
D/K	Monochrome TV system. Sound carrier distance is 6.5 MHz
DAC	Digital Analogue Converter
DAC-HOP	Digital Analogue Converter HOP IC
DC_PROT/ AUDIO_SR	DC protection (for supply)
DC-filament	Filament supply voltage
DC-PROT	DC protection
DETECT	Detect signal side I/O input
DFU	Directions For Use: description for the end user
DIG_IN1	Digital In 1
DIG_IN2	Digital In 2

DIGITAL I/O	Digital In/Out
DIG-OUT	Digital Out
DNR	Dynamic Noise Reduction
DS-AUDIO-L	Dual Sound Audio Left
DS-AUDIO-R	Dual Sound Audio Right
DSP	Digital Signal Processing
DST	Dealer Service Tool
DUET	SAA2505H DUET IC
DVD	Digital Versatile Disc
DYN-FASE-COR	Dynamic phase correction
EHT-INFO	Extra High Tension information
EPG	Electronic Programme Guide (= NexTView)
EW-DRIVE	East-West drive signal
FALCONIC	Field And Line rate CONvertor IC
FBCSO	Fixed Beam Current Switch Off
FBL-DS-OUT	Fast Blanking Dual Screen out
FBL-FDS	Fast Blanking Full Dual Screen
FBL-PIP	Fast Blanking PIP
FBL-SC1-IN	Fast Blanking signal for SCART1 in
FBL-SC2-IN	Fast Blanking signal for SCART2 in
FBL-TXT	Fast Blanking Teletext
FDSL-OUT	Full Dual Screen - Left out
FDSR-OUT	Full Dual Screen - Right out
FEAT-U	U from Feature Box
FEAT-V	V from Feature Box
FEAT-Y	Y from Feature Box
FILAMENT	Filament of CRT
FILAMENT-PROT	Filament protection
FLASH	Flash memory
FM SOUND	Frequency Modulation Sound
FRAME ROTATION	Frame rotation
FRAME-ROT +	Frame rotation +
FRONT-C	Front input chrominance (SVHS)
FRONT-DETECT	Front input detection
FRONT-Y_CVBS	Front input luminance or CVBS (SVHS)
GHOST-IN	Signal Ghost cancellation in
G-SC1-IN	Green SCART1 in
G-SC2-IN	Green SCART2 in
G-TXT	Green Teletext
G-vc	Green from video-controller
HA	Horizontal Acquisition
HA1	Horizontal Sync (diversity)
HA-D	Horizontal Sync from HIP-IC to FDS
HD	Horizontal drive coming from PICNIC
Hdefl-1in	Horizontal deflection signal needed for DC-shift circuitry
Hdefl-lin	Horizontal deflection linearity
HEATER	Heater (Filament)
HFB	Horizontal flyback
HFB+13V	Non-rectified output 13V-winding LOT
HFB-D	Horizontal Fly Back to FDS
HIP	High-end Input Processor
HOP	High-end Output Processor
HOSD PIP	Horizontal OSD PIP
HP	Headphone
HS-DS	Main, Horizontal sync input POPOV IC
I2C	Integrated IC bus
I2S	Integrated IC Sound bus
I2S-CL	I2S bus clock
I2S-DSP-IN	I2S digital signal processor in
I2S-DSP-OUT	I2S digital signal processor out
I2S-DSP-OUT1	Serial-DSP-bus-out1
I2S-WS	I2S bus Word Stroke
IF	Intermediate Frequency
IN-C_IN-R-SC2	Either Chrominance-in SCART2 or Red-in SCART pin 15
IN-FRONT-SNDL	Sound Left front in
IN-FRONT-SNDR	Sound Right front in
IN-SC1-B	In SCART1 Blue
IN-SC1-G	In SCART1 Green
IN-SC1-R	In SCART1 Red
IN-SC1-SNDL	In SCART1 Sound Left
IN-SC1-SNDR	In SCART1 Sound Right
IN-SC2-B	In SCART2 Blue
IN-SC2-CVBS_Y	In SCART2 CVBS or Luminance (SVHS)
IN-SC2-FBL	In SCART2 Fast BLanking
IN-SC2-G	In SCART2 Green
IN-UI-B	B input from UI
IN-UI-FBL	Fast Blanking input from UI
IN-UI-G	G input from UI
IN-UI-R	R input from UI
IO-BUS	In/Out bus
IR-LED	Drive signal for the Service Infra Red LED
IRQ	Interrupt ReQuest
KEYBOARD	Top Control
L	Left Audio
L/L'	Monochrome TV system. Sound carrier distance is 6.5 MHz. L' is Band I, L' are all other Bands
LDP	Line Deflection Protection
LED	Light Emitting Diode
LEFT	Left
LEFT_DOWNMIX	LEFT Down mix
LEFT_IN	Left In
LEFT_OUT	Left out
LF	Left output
LIGHT SENSOR	Light sensor
LINE-DRIVE	Line drive signal
LMN	System L, M, N
LNA	Low Noise Adapter
LS CORRECTION	Picture with corrections
LSP	Large Signal Panel
LV-	Frame coil sink signal to the N/S correction circuitry
LV+	Frame coil drive signal from the frame output stage
MCADEC_RESET	Reset signal (Master reset)
MCS-MPEG	Multi channel sound - MPEG
MSP-CLOCK	Clock signal Multi-standard Sound Processor
MUP	Micro Processor
MUTE	Mute line
M/N	Monochrome TV system. Sound carrier distance is 4.5 MHz
N52502	CAD-naming referring to other sub-schedule
NC	Not Connected
NTSC	National Television Standard Committee. Colour system mainly used in the USA and Japan. Colour carrier is at 3.579545 MHz
NVM	Non Volatile Memory
O/C	Open Circuit
ON/OFF LED	On/Off control signal for the LED
OSD	On Screen Display
OTC	OSD, Teletext, and Controller
OUT-1	Y-output POPOV IC
OUT-2	V-output POPOV IC
OUT-3	U-output POPOV IC
OVERRULE-TXT	Overrule Teletext
P2-5	For MG3.1E, status 4 (SCART 4)
P2-6	For MG3.1E, status 3 (SCART 3)
P2-7	In MG3.1E, RGB 1FH/Front UI
P50_OUT	Easy link (= Project 50) data line from SCART2
PAL	Phase Alternating Line. Colour system mainly used in West Europe (colour carrier = 4.433619 MHz) and South America (colour carrier PAL M = 3.575612 MHz and PAL N = 3.582056 MHz)
PCB	Printed Circuit Board
PD	Power Down
PICNIC	Picture Improved Combined Network IC
PILOT	Pilot Signal

PILOTMUTE	Pilot Mute signal
PIP	Picture In Picture
PIP-B	Picture In picture Blue
PIP-FBL	PIP Fast Blanking
PIP-G	Picture In Picture Green
PIP-R	Picture In Picture Red
PLL	Phase Locked Loop. Used for e.g. FST tuning systems.
POPOV	Double Window/PIP IC
POR	Power On Reset, signal to reset the uP
POWER-DOWN MUTE	Power Down Mute
POWER-ON MUTE	Power On Mute
R	Right Audio
RAM	Random Access Memory
RC5	RC5 signal from the remote control
RESET	Reset signal
RESET-AUDIO	Reset signal for Audio IC MSP3410
RESET-AUDIO-INV	Inverted Reset signal for Audio IC MSP3410
RESET-FLASH	Reset signal flash memory
RF	Right output (no companding)
RGB	Red Green Blue colour signals
RIGHT	Right
RIGHT_DOWNMIX	Right Down mix
RIGHT_IN	Right In
RIGHT_OUT	Right out
ROM	Read Only Memory
R-SC1-IN	Red SCART1 in
R-TXT	Red Teletext
R-vc	Red from video-controller
S/C	Short Circuit
SAM	Service Alignment Mode
SC2-B-IN	SCART2 Blue in
SC2-C-IN	SCART2 Chrominance in
SC2FH_IFH	Sand-castle 1fH/2fH
SC2-G-IN	SCART2 Green in
SC2-R-IN C-IN	Red in SCART2 or Chrominance in
SCART	Syndicat des Constructeurs d'Appareils Radiorecepteurs et Televisieurs
Scavem	Scan Velocity Modulation
SCAVEM-SW	Scavem- switch
SCL	Serial clock line of the I2C bus
SCL-F	Clock line of the I2C-bus fast (for TXT)
SCL-S	Clock line of the I2C-bus slow
SDA	Serial Data line of the I2C bus
SDA-F	Data line of the I2C-bus fast (for TXT)
SDA-S	Data line of the I2C-bus slow
SDM	Service Default Mode
SECAM	Sequence Couleur Avec Memoire. Colour system mainly used in France and East Europe. Colour carriers are 4.406250 MHz and 4.250000 MHz
SEL_SOFAC_0	Selection-signal for SOFAC 0
SEL_SOFAC_1	Selection-signal for SOFAC 1
SEL_TO-MCS_LR	Selection switch MCS Left Right
SELECT TO EXT2	Selection of Extern 2 input
SELECT_TO_CORDL_1	Selection signal for Cordless 1
SELECT_TO_MCS_CINCH_0	Selection signal for MCS Cinch 0
SELECT_TO_MCS_CINCH_1	Selection signal for MCS Cinch 1
SELECT-AUDIO CINCH1	Selection of audio via cinch input 1
SELECT-AUDIO-CINCH2	Selection of audio via cinch input 2
SELECT-AUDIO-LR	Selection of Audio Left and Right
SELECT-TO_CORDL_0	Selection signal for Cordless 0
SERVICE-DEFAULT	Service pin to activate SDM
SERVICE-MODE	Service pin to activate SAM
SIF	Sound Intermediate Frequency
SIFM	Sound Intermediate Frequency Mono
SL	Surround Left
SL-ST	Sliding stereo of the Stereo Demodulator IC TDA1578A
SNDL-CL-VL-OUT	Sound Left constant level, variable level out
SNDL-FRONT-IN	Sound Left front in
SNDL-HEADPH-OUT	Sound Left headphone out
SNDL-SC1-IN	Sound L SCART1 in
SNDL-SC1-OUT	Sound Left SCART1 out
SNDL-SC2-IN	Sound Left SCART2 in
SNDL-SC2-OUT	Sound Left SCART2 out
SNDL-SC3-IN	Sound Left SCART3 in
SNDL-SC4-IN	Sound Left SCART4 in
SNDL-UI-IN	Sound Left UI IN
SNDR-CL-VL-OUT	Sound Right constant level, variable level out
SNDR-FRONT-IN	Sound Right front in
SNDR-HEADPH-OUT	Sound Right headphone out
SNDR-SC1-IN	Sound Right SCART1 in
SNDR-SC1-OUT	Sound Right SCART1 out
SNDR-SC2-IN	Sound Right SCART2 out
SNDR-SC2-OUT	Sound Right SCART2 out
SNDR-SC3-IN	Sound Right SCART3 in
SNDR-SC4-IN	Sound Right SCART4 in
SNDS-CL-VL-OUT	Sound surround constant level, variable level out
SNDS-VL-OUT	Surround sound Left variable level out
SNDS-VR-OUT	Surround sound Right variable level out
SOFAC	Sound and Fading Control
SOUND L-HEADPHONE-OUT	Sound Left headphone out
SOUND R-HEADPHONE-OUT	Sound Right headphone out
SOUND-ENABLE	Sound Enable
SOUND-SELECT	Sound signal Selection
SOPS	Self Oscillating Power Supply
SPDIF	Sony Philips Digital Interface Format
SPDIF_IN1	SPDIF In 1
SPDIF_IN2	SPDIF In 2
SS LEFT	Surround Left
SS RIGHT	Surround Right
SSP	Small Signal Panel
STANDARD-FM-1	Standard Frequency Modulation 1
STANDARD-FM-2	Standard Frequency Modulation 2
STANDBY	Standby
STATUS1/2/3	Status signal from Euro-connector 1, 2, or 3 to the P (1.29 - 3.31 V is 16:9 signal, 3.32 - 5 V is 4:3 signal)
STBY	Standby
STEREO	Stereo
SUBCAR	Sub Carrier
SUB-H	Horizontal Sync Sub-TV-Program (via FDS)
SUB-V	Vertical Sync Sub-TV-Program (via FDS)
SUBWOOFER	Subwoofer speaker
SURROUND-LEFT	Surround Left
SURROUND-RIGHT	Surround Right
SW	Subwoofer
SYNC-SELECT	Synchronisation selection
TOPIC	The Outmost Picture Improvement IC
TRIG	Triggering
TUNED	Tuned-flag coming from the IF-IC TDA1597
UB-DEC	U-input for FDS
U-DEC	U-dec (input signal for PICNIC)
U-DS-1FH	U Dual Screen 1 x Horizontal Frequency
U-DS-2FH	U Dual Sound 2 x Horizontal Frequency
U-DS-OUT	U Dual Screen out
UF-DEC	U-MAIN input POPOV IC

U-FEAT	U-feature-box (output signal from PICNIC)
UF-SUB	U-SUB input POPOV IC
UI	Universal Interface
U-OUT	U-signal to HOP IC
U-SUB	U-output of HIP-IC on FDS
VA	Vertical Acquisition
VA1	Vertical Sync (diversity)
VB-DEC	V input for FDS
VD	Vertical Drive coming from PICNIC
VD-D	Vertical sync to FDS
V-DEC	V-dec (input signal for PICNIC)
VDEFL-1	Vertical deflection connection 1
VDEFL-2	Vertical deflection connection 2
VDNEG	Negative vertical drive signal
VDPOS	Positive vertical drive signal
+VD-switched	Only for VGA sets (VD switched i.s.o. V_bat).
V-DS-1FH	V Dual Screen 1 x Horizontal Frequency
V-DS-2FH	V Dual Screen 2 x Horizontal Frequency
V-DS-OUT	V Dual Screen out
VFB	Vertical Flyback Pulse
VF-DEC	V-MAIN input POPOV IC
V-FEAT	V-Feature box (output signal from PICNIC)
VF-SUB	V-SUB input POPOV IC
VGA-B	VGA Blue
VGA-FBL	VGA Fast-blanking
VGA-G	VGA Green
VGA-R	VGA Red
VL_L	Variable level Left
VL_R	Variable level Right
VL_SL	Variable level Surround Left
VL_SR	Variable level Surround Right
VL_SW	Variable Level Sub-Woofer
VL_SW_DBE	Variable Level Subwoofer Dynamic Bass Enhancement
VLL_C	Variable level Centre
V-OUT	V-signal to HOP-IC
VOUT_C	V-out Centre
VOUT_L	V-out Left
VOUT_R	V-out Right
VOUT_SL	V-out Surround Left
VOUT_SR	V-out Surround Right
VOUT-SW	V-out Subwoofer
VREG	Opto-coupler feedback signal
VS-DS	Main, vertical sync input POPOV IC
V-SUB	V-output of HIP-IC on FDS
WIRED BACKUP-INFO	Wired back up information
WIRED-BACKUP AUDIO INFO	Audio signal (surround)
WIRELESS SURROUND RECEIVER	Wireless Surround receiver
WIRELESS TRANSMITTER	Wireless Transmitter
X-RAY-PROT	X-Ray Protection
X-tal	Quartz crystal
Y/C	Luminance (Y) / Chrominance (C) signal
Y_CVBS-SC2-IN	Luminance or CVBS SCART2 in
YB-DEC	Y input for FDS
Y-DEC	Luminance-dec (input signal for PICNIC)
Y-DS-1FH	Y Dual Screen 1 x Horizontal Frequency
Y-DS-2FH	Y-Dual Screen 2 x Horizontal Frequency
Y-DS-OUT	Y Dual Screen out
YF-DEC	Y-Main input POPOV IC
Y-FEAT	Luminance Feature box (output signal from PICNIC)
YF-SUB	Y-SUB input POPOV IC
Y-OUT	Luminance-signal to HOP-IC
Y-SUB	Y-output of HIP-IC on FDS
YUV	Component video
YUV-SELECT-2FH	YUV selection 2 x Horizontal Frequency
uP	Micro Processor

9.8 IC Data Sheets

In this paragraph, the internal block diagrams and pinning are given of ICs that are drawn as a 'black box' in the electrical diagrams (with the exception of 'memory' and 'logic' ICs).

9.8.1 Diagram B, TNY256 (IC7103)

Internal Block Diagram and Pinning

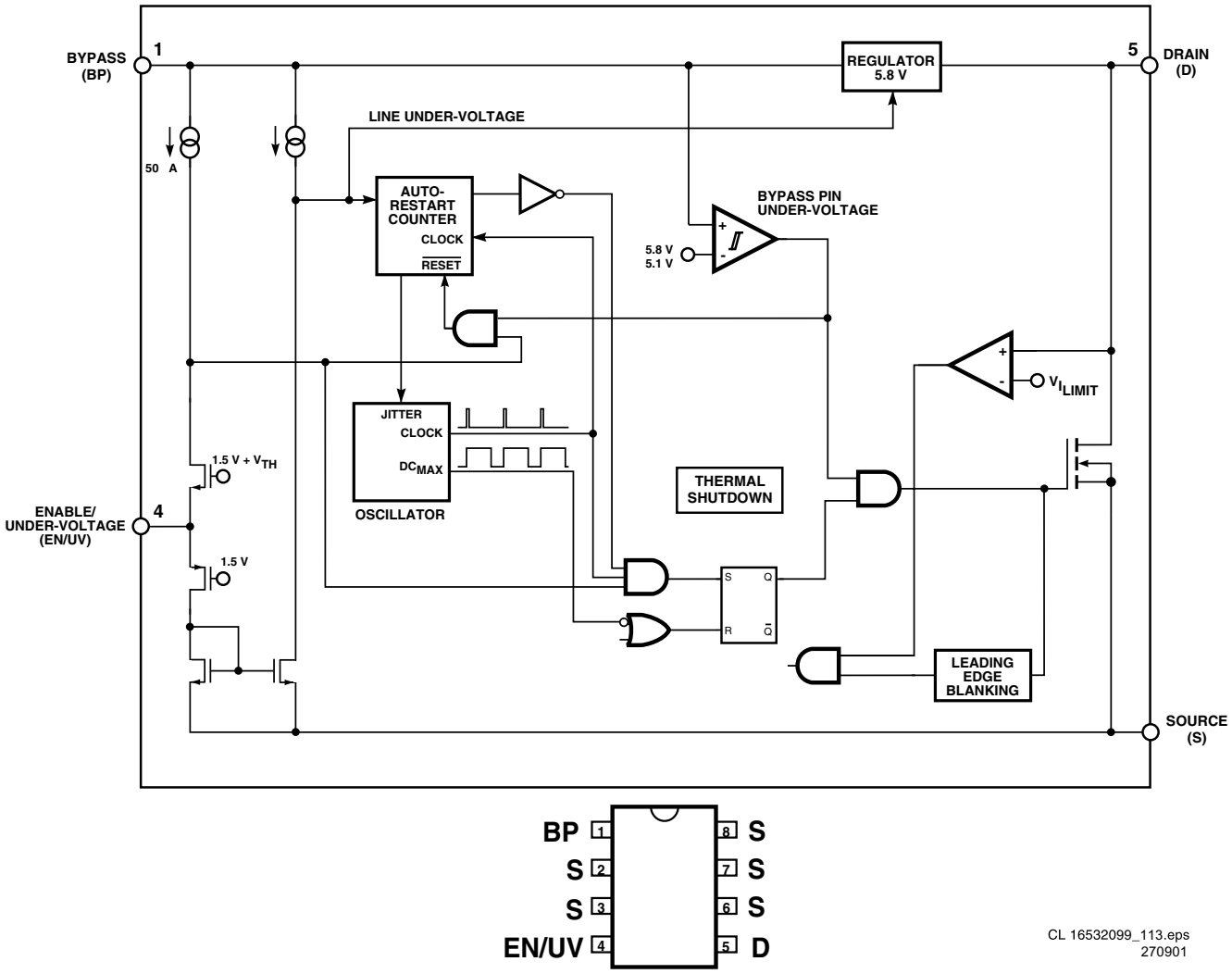

Figure 9-17

9.8.2 Diagram K8, TEA6415 (IC7208)

Internal Block Diagram and Pinning

TEA6415C

BLOCK DIAGRAM

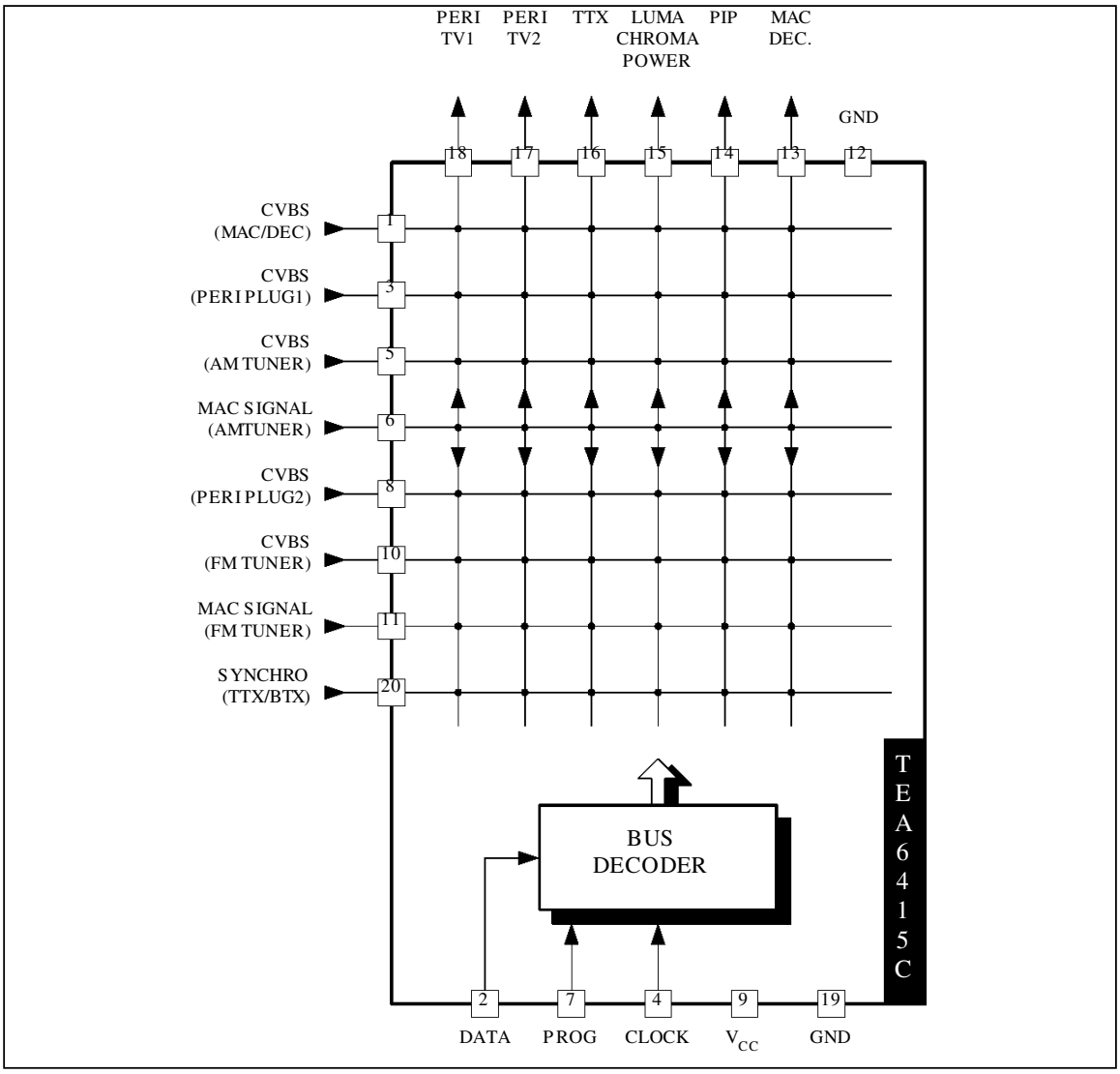

PIN CONNECTIONS

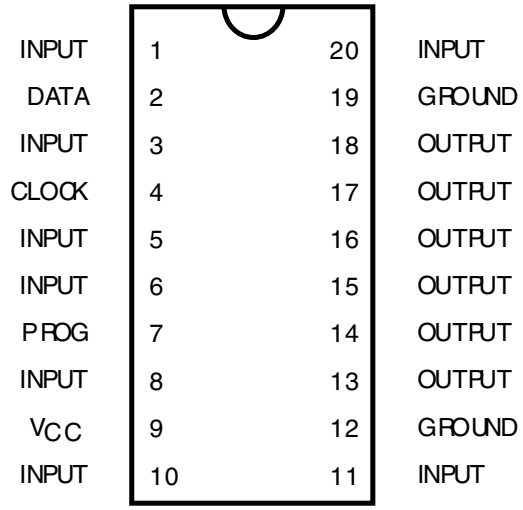

CL 16532149_109.eps
201201

Figure 9-18

9.8.3 Diagram L2, T8F24EF (IC7724)

Internal Block Diagram and Pinning

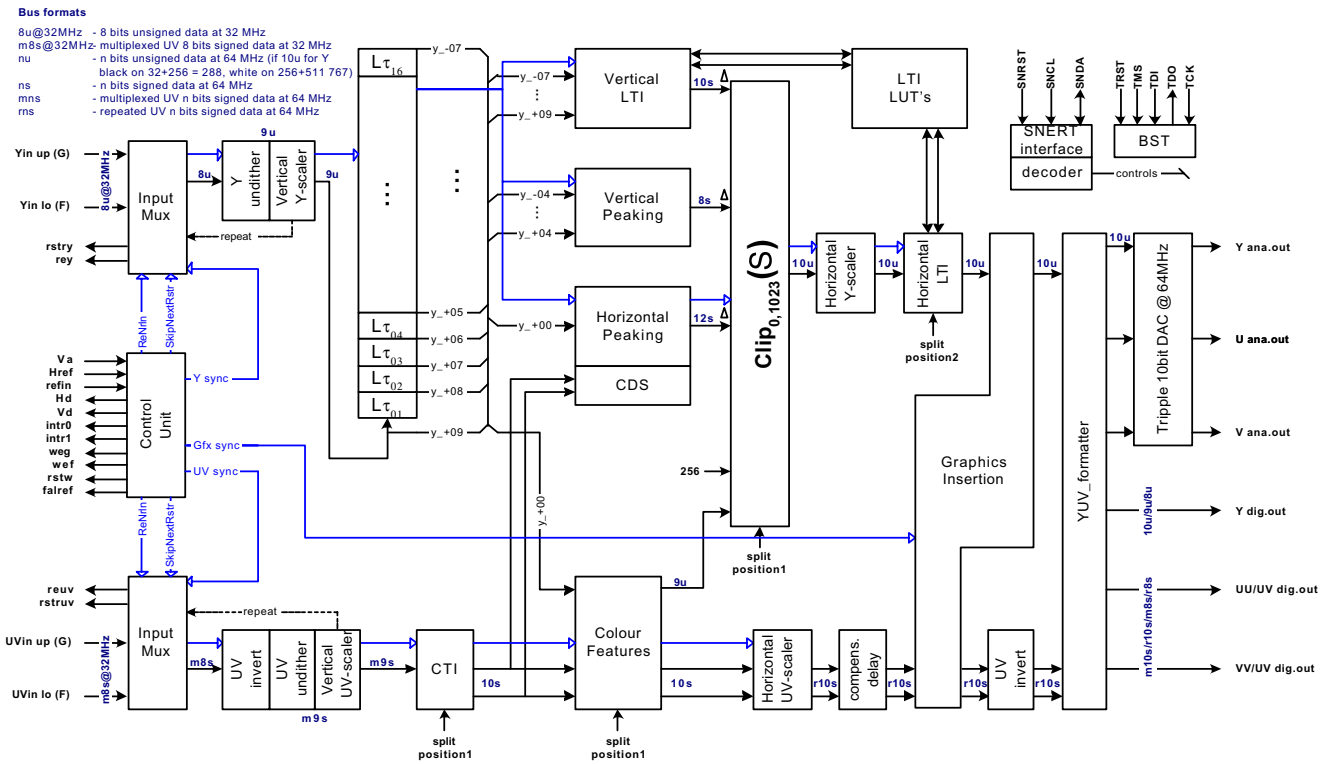

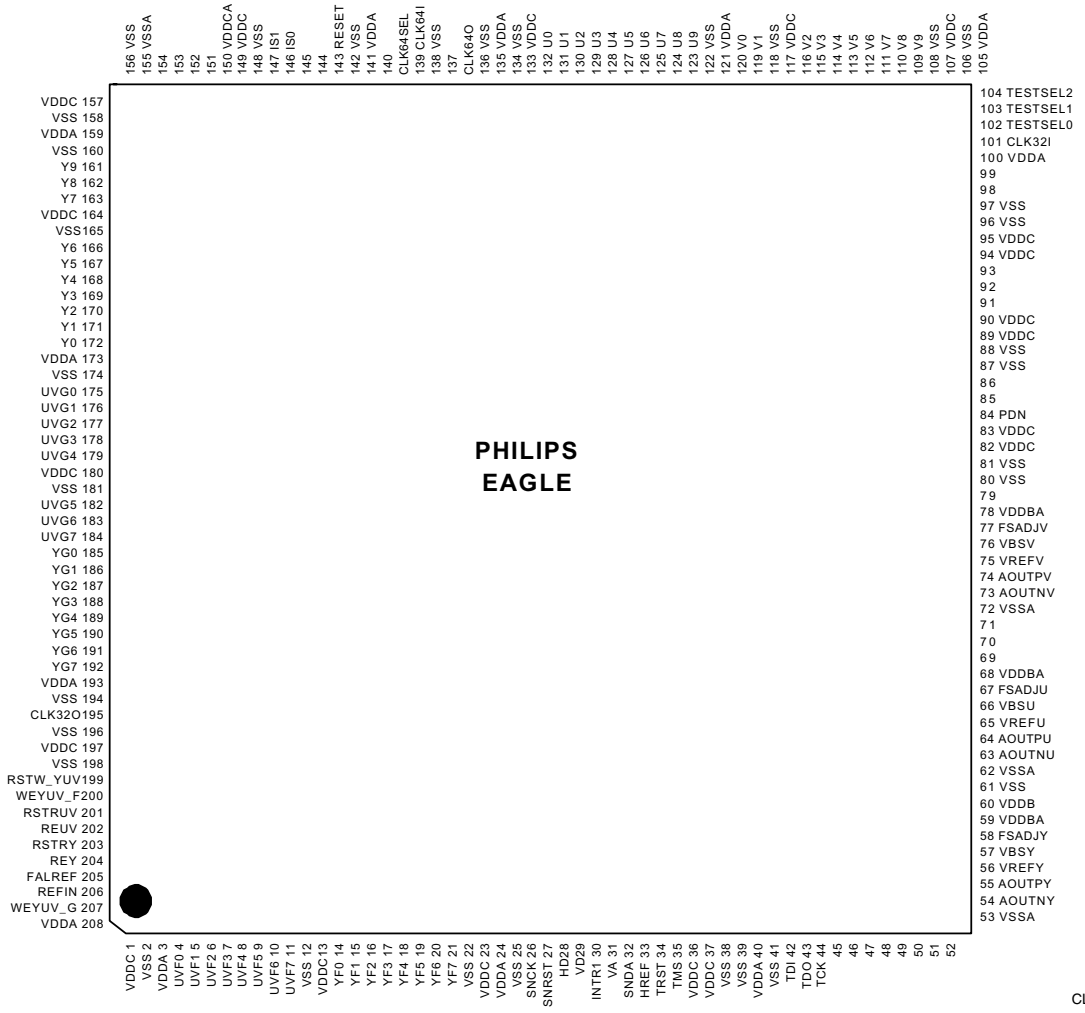

CL 16532149_110.eps
201201

Figure 9-19

9.8.4 Diagram N1, SAA2505 (IC7801)

Internal Block Diagram and Pinning

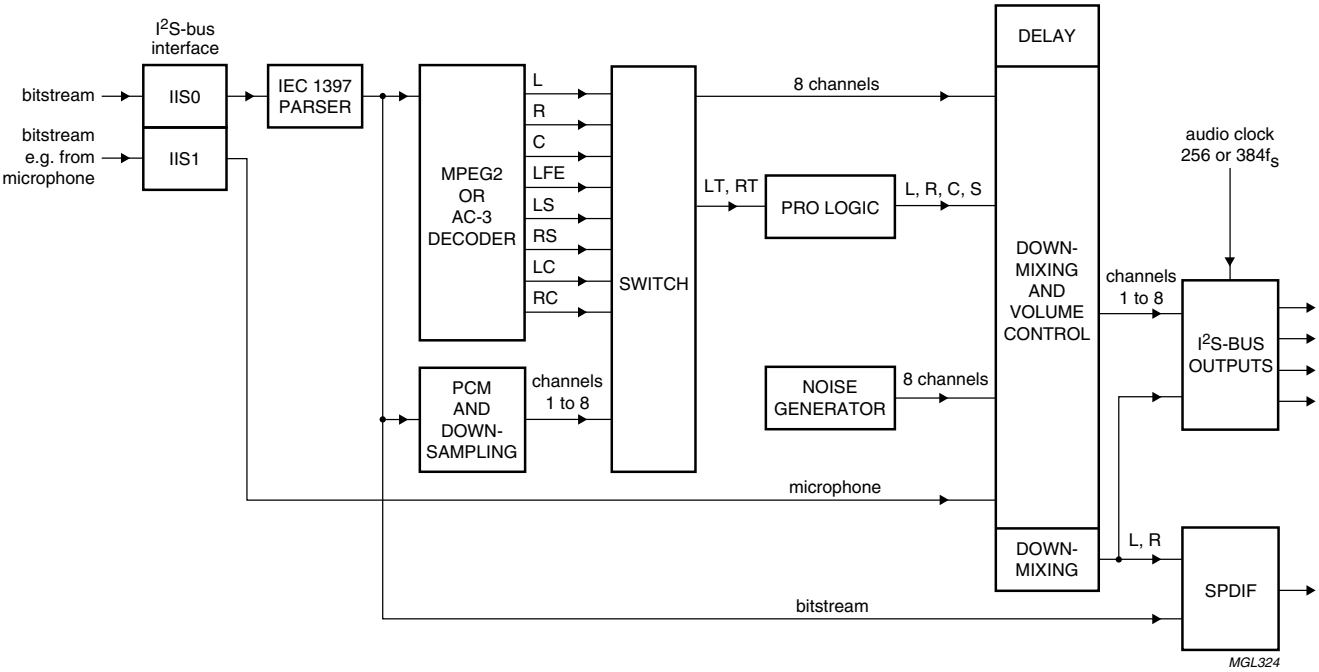

Simplified block diagram.

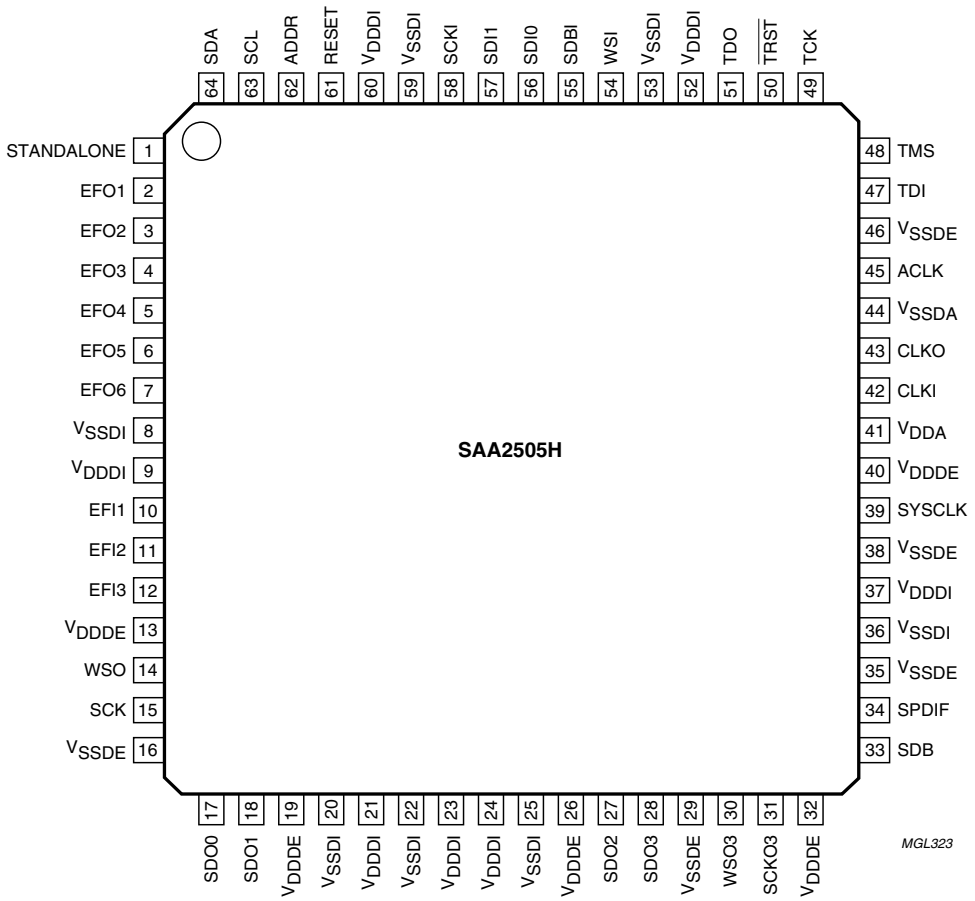

Pin configuration.

CL 16532149_112.eps
201201

Figure 9-20

9.8.5 Diagram U, MC68HC705J1A (IC7708)

Internal Block Diagram and Pinning

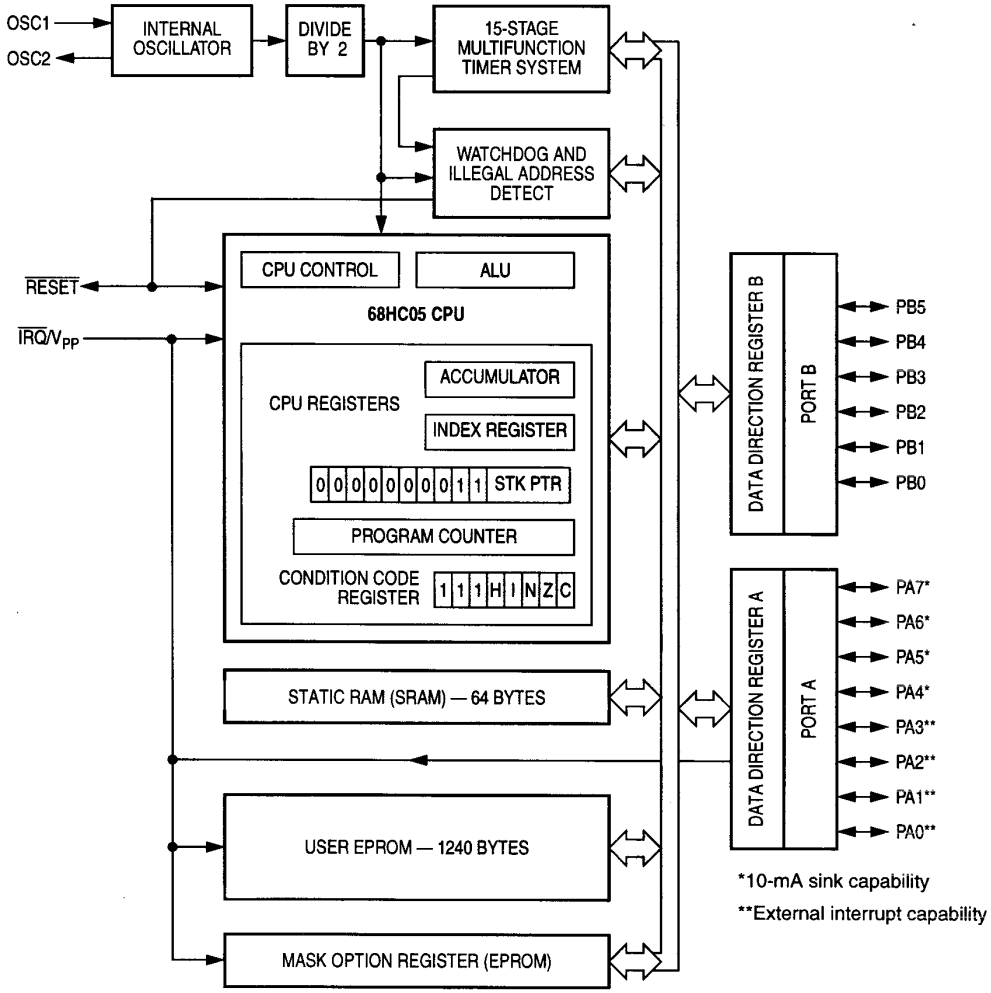

Figure 1-1. Block Diagram

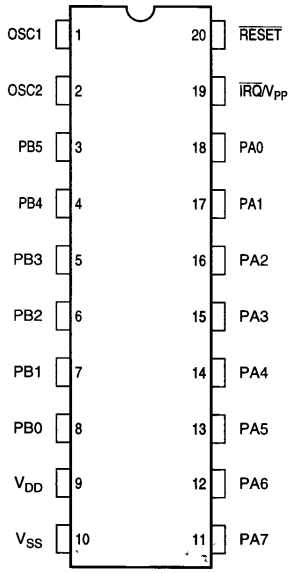

Figure 1-2. Pin Assignments

CL 16532149_114.eps
201201

Figure 9-21

9.8.6 Diagram U, TDA1597 (IC7701)

Internal Block Diagram and Pinning

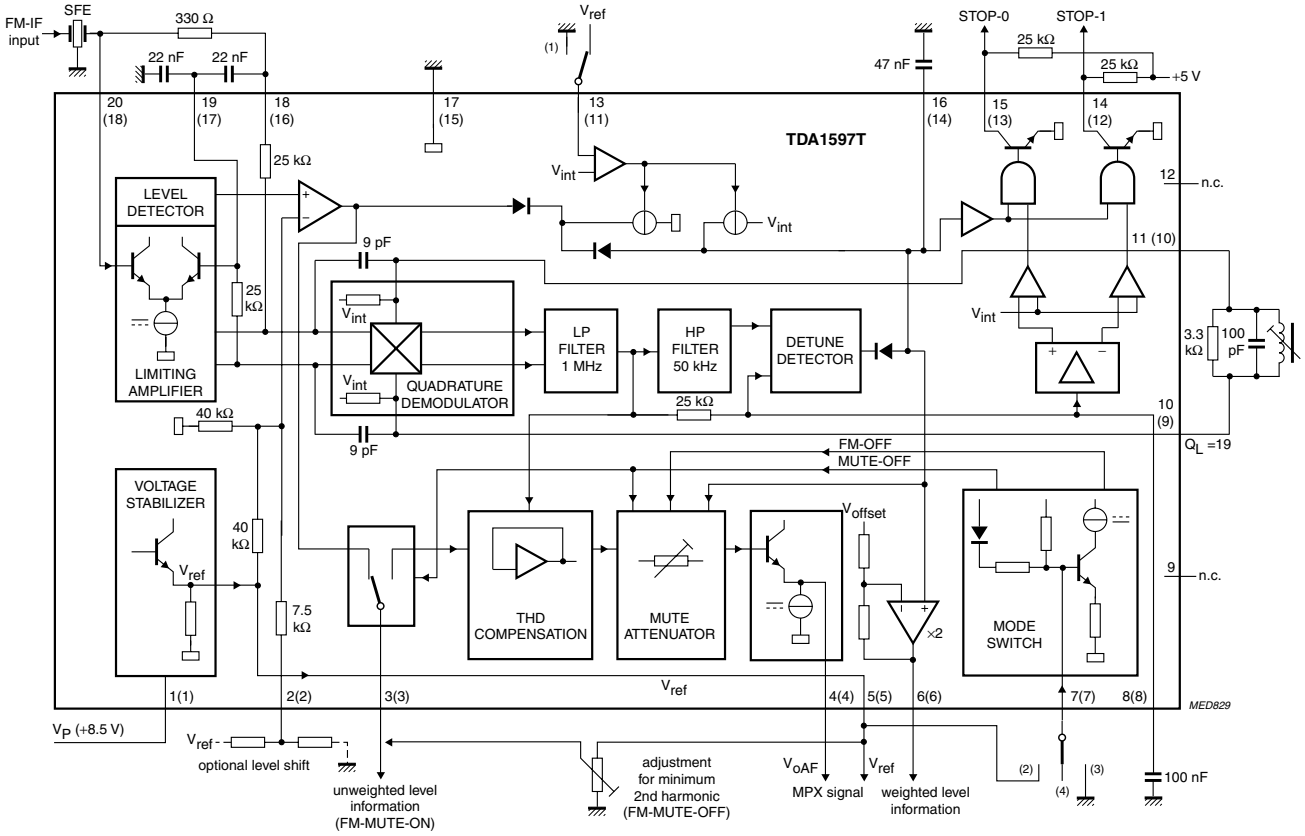

The pin numbers given in parenthesis refer to the TDA1597.

(1) Connecting pin 13 (11) to ground is only allowed to measure the current on pin 16 (14).

(2) FM-MUTE-OFF.

(3) FM-OFF.

(4) FM-MUTE-ON.

Block diagram and application circuit.

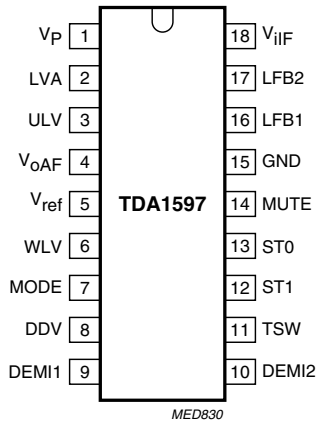

Pin configuration (DIP version).

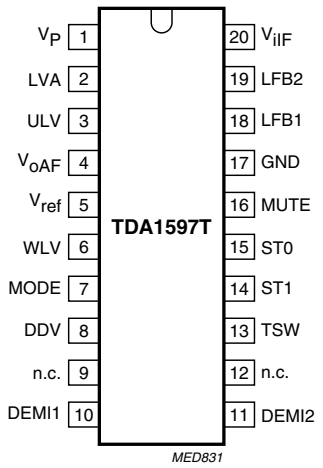

Pin configuration (SO version).

CL 16532149_111.eps
201201

Figure 9-22

10. Spare Parts List

Large Signal Panel [A]

Various

S001	3122 785 90420	28"/32"/36" line repair kit
0030	3104 304 19583	LSP Bracket
0037	3104 304 20264	LOT support bracket
0050	4822 255 41371	Spring line deflection
0051	4822 492 70789	Spring fix transistor
0052	4822 492 70789	Spring fix transistor
0053	3122 121 24785	Spring fix transistor
0054	3122 121 24785	Spring fix transistor
0061	4822 492 70789	Spring fix transistor
0062	4822 492 70789	Spring fix transistor
0065	3104 304 24821	Spacer LOT bracket
0303	4822 267 10774	2P male red
0304	4822 265 20723	2P male black
0311	4822 267 10978	7P male black
0315	4822 267 10979	9P male black
0317	4822 265 20723	2P male
0320	4822 267 10974	9P male
0321	4822 267 10978	7P male black
0324	4822 267 10972	5P male black
0325	4822 267 10967	3P male black
0328	4822 267 10962	11P male v
0335	4822 267 10969	3P male red
0336	4822 267 10967	3P male black
0337	4822 267 10967	3P male black
0338	4822 267 11043	3P male yellow
0390	4822 267 10963	3P male
0391	4822 267 10973	1P male
0393	2422 025 16583	5P female
0394	4822 267 10969	3P male
0395	4822 267 11043	3P male yellow
1460	4822 252 51186	Fuse 2A
8000	3104 311 03272	Eht cable 640 mm
8000	3104 311 03721	Eht cable 820 mm
8015	3104 308 77981	Focus cable 360mm
8300	4822 320 20216	Focus cable 364mm
8301	4822 320 20216	Focus cable 364mm
8304	3104 301 08671	Cable 3P 220 mm
8311	3104 301 08332	Cable 7P 340 mm
8315	3104 301 09611	Cable 9P 340 mm
8317	3104 311 00331	Cable 3P 340 mm
8320	3104 301 08752	Cable 9P 560 mm
8321	3104 301 08682	Cable 7P 180 mm
8324	3104 301 08762	Cable 5P 400 mm
8325	3104 311 00131	Cable 3P 560 mm
8325	3104 311 01971	Cable 3P 140 mm
8328	3104 311 01161	Cable 11P 340 mm
8337	4822 320 12671	Cable 3P 560 mm
8394	3104 311 00421	Cable 3P 480 mm
8395	3104 311 01991	Cable 3P 560 mm
8400	2422 025 16691	3P male

⊣⊢

2400	4822 124 11575	47µF 20% 160V
2401	4822 121 43343	4.7nF 10% 400V
2409	4822 126 12726	47pF 5% 50V
2410	2222 462 90009	4.7nF 2% 250V
2412	5322 121 42489	33nF 5% 250V
2413	4822 124 12255	10µF 20% 50V
2414	5322 121 42489	33nF 5% 250V
2415	5322 122 32334	220pF 10% 100V
2417	4822 121 42408	220nF 5% 63V
2418	4822 126 12263	220pF 10% 1kV
2419	5322 121 44151	33nF 10% 400V
2420	4822 121 70581	1.5nF 5% 2kV
2420	4822 121 70594	1nF 5% 2kV
2420	4822 121 70595	1.2nF 5% 2kV
2422	2038 301 00312	1.2µF 5% 250V
2425	4822 121 10526	9.1nF 5% 2kV
2425	4822 121 70435	10nF 5% 2kV
2426	4822 121 10551	27nF 5% 1600V
2431	5322 122 32331	1nF 10% 100V
2431	5322 122 32818	2.2nF 10% 100V
2433	2022 333 00086	470nF 5% 250V
2433	2022 333 00163	360nF 5% 250V
2433	4822 121 10518	390nF 5% 250V
2436	4822 124 41584	100µF 20% 10V
2437	4822 124 41741	2.2µF 20% 350V
2438	4822 122 33449	47nF 30% 50V
2439	5322 122 32331	1nF 10% 100V
2439	5322 122 32818	2.2nF 10% 100V
2442	4822 124 12297	4.7µF 20% 350V
2448	2020 300 90572	8.2nF 10% 50V
2448	4822 121 41857	10nF 5% 250V
2450	4822 121 40518	100nF 10% 250V
2454	4822 121 42408	220nF 5% 63V
2455	4822 121 43897	1nF 5% 400V
2455	4822 126 12451	820pF 10% 50V
2457	4822 121 70386	47nF 10% 250V
2460	4822 126 13185	680pF 10% 500V
2461	4822 124 11767	470µF 20% 25V
2462	4822 124 81039	3300µF 20% 25V
2463	4822 126 13185	680pF 10% 500V
2465	4822 122 31177	470pF 10% 500V
2466	4822 124 11767	470µF 20% 25V
2480	4822 121 43913	470nF 10% 100V
2480	4822 124 40763	2.2µF 100V
2481	5322 122 32311	470pF 10% 100V
2482	4822 124 22466	1µF 20% 50V
2484	4822 124 40769	4.7µF 20% 100V
2487	4822 124 40248	10µF 20% 63V
2493	2222 479 90166	68nF 5% 400V
2494	4822 124 81144	1000µF 16V
2506	4822 121 10711	100nF 20% 275V
2520	4822 121 43396	120nF 5% 63V
2520	4822 121 43526	47nF 5% 250V
2530	4822 124 21913	1µF 20% 63V
2612	5322 122 32311	470pF 10% 100V
2613	5322 122 32311	470pF 10% 100V
2615	2020 021 91513	100µF 20% 50V
2616	5322 121 42386	100nF 5% 63V
2617	4822 121 42408	220nF 5% 63V
2618	4822 121 51252	470nF 5% 63V
2620	5322 124 40641	10µF 20% 100V
2625	4822 121 43526	47nF 5% 250V
2714	4822 122 10182	100pF 5% 50V
2716	4822 122 10182	100pF 5% 50V
2730	4822 124 40248	10µF 20% 63V
2732	4822 124 12392	47µF 20% 16V
2733	5322 121 42386	100nF 5% 63V
2738	4822 122 10182	100pF 5% 50V
2739	4822 122 10182	100pF 5% 50V
2740	4822 122 30103	22nF 80% 63V
2741	4822 122 30103	22nF 80% 63V
2742	5322 121 42386	100nF 5% 63V
2743	4822 126 12638	6.8nF 10% 50V
2748	4822 121 43526	47nF 5% 250V
2749	4822 121 43526	47nF 5% 250V
2750	4822 122 30103	22nF 80% 63V
2751	4822 122 30103	22nF 80% 63V
2755	4822 126 12638	6.8nF 10% 50V
2756	4822 121 43526	47nF 5% 250V
2757	4822 121 43526	47nF 5% 250V
2760	4822 122 30103	22nF 80% 63V
2761	4822 122 30103	22nF 80% 63V
2762	4822 124 12392	47µF 20% 16V
2763	4822 124 80408	4.7µF 20% 50V
2768	4822 121 43526	47nF 5% 250V
2769	4822 121 43526	47nF 5% 250V
2770	4822 122 30103	22nF 80% 63V
2771	4822 122 30103	22nF 80% 63V
2772	5322 121 42386	100nF 5% 63V
2774	5322 121 42386	100nF 5% 63V
2775	4822 126 12638	6.8nF 10% 50V
2776	4822 121 43526	47nF 5% 250V
2777	4822 121 43526	47nF 5% 250V
2780	4822 124 21913	1µF 20% 63V
2790	4822 124 80061	1000µF 20% 25V
2791	4822 124 80061	1000µF 20% 25V
2792	5322 121 42386	100nF 5% 63V
2793	5322 121 42386	100nF 5% 63V
2794	4822 124 40248	10µF 20% 63V
2795	4822 124 40248	10µF 20% 63V

⊣▭⊢

3401	4822 053 12479	47Ω 5% 3W
3404	4822 116 83883	470Ω 5% 0.5W
3406	4822 116 52175	100Ω 5% 0.5W
3407	4822 050 21003	10k 1% 0.6W
3411	4822 116 52195	47Ω 5% 0.5W
3413	4822 116 83883	470Ω 5% 0.5W
3414	4822 116 52226	560Ω 5% 0.5W
3415	4822 053 12229	22Ω 5% 3W
3417	4822 116 52176	10Ω 5% 0.5W
3423	4822 053 10688	6Ω8 5% 1W
3425	4822 116 52176	10Ω 5% 0.5W
3426	4822 116 52176	10Ω 5% 0.5W
3428	4822 116 52245	150k 5% 0.5W
3429	4822 116 83884	47k 5% 0.5W
3431	4822 052 10221	220Ω 5% 0.33W
3431	4822 052 11471	470Ω 5% 0.5W
3432	4822 116 83884	47k 5% 0.5W
3436	4822 116 52269	3k3 5% 0.5W
3437	4822 116 52245	150k 5% 0.5W
3438	4822 050 23303	33k 1% 0.6W
3440	4822 050 23303	33k 1% 0.6W
3441	4822 116 52272	330k 5% 0.5W
3442	4822 116 83874	220k 5% 0.5W
3443	4822 052 11688	6Ω8 5% 0.5W
3444	4822 050 23303	33k 1% 0.6W
3445	4822 116 52256	2k2 5% 0.5W
3446	4822 050 11002	1k 1% 0.4W
3447	4822 052 10229	22Ω 5% 0.33W
3448	4822 116 52252	180k 5% 0.5W
3448	4822 116 52291	56k 5% 0.5W
3449	4822 050 21003	10k 1% 0.6W
3449	4822 116 52176	10Ω 5% 0.5W
3450	4822 116 83884	47k 5% 0.5W
3451	4822 050 23303	33k 1% 0.6W
3451	4822 116 52264	27k 5% 0.5W
3452	4822 116 52257	22k 5% 0.5W
3452	4822 116 52264	27k 5% 0.5W
3453	4822 116 80176	1Ω 5% 0.5W
3454	4822 116 52291	56k 5% 0.5W
3454	4822 116 83882	39k 5% 0.5W
3454	4822 116 83884	47k 5% 0.5W
3455	4822 116 83874	220k 5% 0.5W
3457	4822 050 12704	270k 1% 0.4W
3457	4822 116 52292	560k 5% 0.5W
3457	4822 116 52298	680k 5% 0.5W
3458	4822 116 52252	180k 5% 0.5W
3458	4822 116 52272	330k 5% 0.5W
3458	4822 116 52304	82k 5% 0.5W
3459	4822 116 83883	470Ω 5% 0.5W
3462	4822 052 11108	1Ω 5% 0.5W
3463	4822 052 11108	1Ω 5% 0.5W
3464	4822 050 11002	1k 1% 0.4W
3465	4822 052 10151	150Ω 5% 0.33W
3466	4822 052 11108	1Ω 5% 0.5W
3467	4822 052 11108	1Ω 5% 0.5W
3468	4822 052 10151	150Ω 5% 0.33W
3478	4822 116 83872	220Ω 5% 0.5W
3480	4822 116 52291	56k 5% 0.5W
3481	4822 052 10102	1k 5% 0.33W
3482	4822 116 52272	330k 5% 0.5W
3483	4822 052 10478	4Ω7 5% 0.33W
3484	4822 052 10338	3Ω3 5% 0.33W
3484	4822 052 10478	4Ω7 5% 0.33W
3484	4822 052 10688	6Ω8 5% 0.33W
3485	4822 050 21006	10M 1% 0.6W
3485	4822 050 27505	7M5 1% 0.6W
3486	4822 116 52234	100k 5% 0.5W
3487	4822 052 10133	13k 5% 0.33W
3488	4822 050 11002	1k 1% 0.4W
3489	4822 116 52191	33Ω 5% 0.5W
3490	4822 116 83874	220k 5% 0.5W
3491	4822 116 83874	220k 5% 0.5W
3492	4822 050 23303	33k 1% 0.6W
3493	4822 050 11002	1k 1% 0.4W
3498	4822 116 83872	220Ω 5% 0.5W
3506	4822 117 12027	PTC 18Ω-3k 25%
3507	4822 117 12027	PTC 18Ω-3k 25%
3509	4822 052 10472	4k7 5% 0.33W
3510	4822 050 21003	10k 1% 0.6W
3511	4822 116 52263	2k7 5% 0.5W
3512	4822 116 52191	33Ω 5% 0.5W
3520	2138 101 13753	75k 5% 0.5W
3520	4822 116 52234	100k 5% 0.5W
3521	4822 050 18204	820k 1% 0.4W
3521	4822 116 83866	1M 5% 0.5W
3530	4822 050 21003	10k 1% 0.6W
3531	4822 116 52257	22k 5% 0.5W
3531	4822 116 83884	47k 5% 0.5W
3532	4822 050 18204	820k 1% 0.4W
3532	4822 116 52298	680k 5% 0.5W
3601	4822 116 80676	1Ω5 5% 0.5W
3602	4822 116 80176	1Ω 5% 0.5W
3602	4822 116 80676	1Ω5 5% 0.5W
3603	4822 116 80176	1Ω 5% 0.5W
3610	4822 050 11002	1k 1% 0.4W
3611	4822 050 28201	820Ω 1% 0.6W
3612	4822 050 28201	820Ω 1% 0.6W
3613	4822 050 11002	1k 1% 0.4W
3614	4822 050 11002	1k 1% 0.4W
3617	4822 052 10158	1Ω5 5% 0.33W
3618	4822 116 52195	47Ω 5% 0.5W
3618	4822 116 83872	220Ω 5% 0.5W
3619	4822 116 52195	47Ω 5% 0.5W
3619	4822 116 83872	220Ω 5% 0.5W
3620	4822 050 21003	10k 1% 0.6W
3625	4822 116 52175	100Ω 5% 0.5W

3630	4822 116 52289	5k6 5% 0.5W
3703	4822 116 80176	1Ω 5% 0.5W
3721	4822 116 52234	100k 5% 0.5W
3722	4822 116 52234	100k 5% 0.5W
3725	4822 116 52234	100k 5% 0.5W
3726	4822 116 52234	100k 5% 0.5W
3728	4822 116 52234	100k 5% 0.5W
3729	4822 116 52234	100k 5% 0.5W
3730	4822 116 83883	470Ω 5% 0.5W
3731	4822 116 83884	47k 5% 0.5W
3732	4822 116 83884	47k 5% 0.5W
3733	4822 116 52207	1k2 5% 0.5W
3734	4822 116 52257	22k 5% 0.5W
3735	4822 116 83961	6k8 5%
3740	4822 116 52256	2k2 5% 0.5W
3741	4822 116 52226	560Ω 5% 0.5W
3743	4822 116 80176	1Ω 5% 0.5W
3745	4822 117 12798	8Ω2 5% 0.25W
3751	4822 116 80176	1Ω 5% 0.5W
3752	4822 116 52256	2k2 5% 0.5W
3753	4822 116 52226	560Ω 5% 0.5W
3754	4822 117 12798	8Ω2 5% 0.25W
3760	4822 116 52256	2k2 5% 0.5W
3761	4822 116 52226	560Ω 5% 0.5W
3763	4822 116 80176	1Ω 5% 0.5W
3765	4822 117 12798	8Ω2 5% 0.25W
3772	4822 116 52256	2k2 5% 0.5W
3773	4822 116 52226	560Ω 5% 0.5W
3774	4822 117 12798	8Ω2 5% 0.25W
3780	4822 116 52289	5k6 5% 0.5W
3781	4822 116 52289	5k6 5% 0.5W
3782	4822 116 52289	5k6 5% 0.5W
3783	4822 116 52289	5k6 5% 0.5W
3785	4822 116 52263	2k7 5% 0.5W
3786	4822 116 52269	3k3 5% 0.5W
3787	4822 050 21003	10k 1% 0.6W
3790	4822 116 52234	100k 5% 0.5W
3791	4822 116 52234	100k 5% 0.5W

5400	4822 157 71467	39µH 10%
5401	4822 157 71452	18µH 10%
5410	4822 146 11066	Line driver transf.
5421	3128 138 55611	Linearity coil (36")
5421	3128 138 56152	Linearity coil (28")
5421	3128 138 57411	Linearity coil (32")
5422	4822 146 11137	Bridge coil
5423	4822 157 71097	0.56µH
5425	4822 157 11411	Bead 100mHz
5426	4822 157 11771	0.09µH 10%
5430	3128 138 20931	LOT CML16 (32"/36")
5430	8204 000 75001	LOT (28")
5460	4822 157 71466	2.2µH 20%
5462	4822 157 71466	2.2µH 20%
5466	4822 157 71441	15µH 10%
5466	4822 157 71452	18µH 10%
5468	4822 157 10452	10µH 10%
5468	4822 157 71452	18µH 10%
5480	4822 157 63253	Choke
5490	4822 526 10704	Bead 100mHz
5491	4822 526 10704	Bead 100mHz
5493	8228 001 34391	Driver Transformer CU15
5501	4822 157 11422	12µH 10%
5502	4822 157 11422	12µH 10%
5617	4822 157 11771	0.09µH 10%
5701	4822 157 11299	10µH 5%
5702	4822 157 11299	10µH 5%

6407	4822 130 42488	BYD33D
6408	4822 130 42488	BYD33D
6410	4822 130 30621	1N4148
6421	9322 165 72687	DTV1500MFP
6422	4822 130 10218	BY229X-800
6437	4822 130 30621	1N4148
6441	4822 130 42488	BYD33D
6451	4822 130 34382	BZX79-B8V2
6452	4822 130 30621	1N4148
6453	4822 130 34142	BZX79-B33
6454	4822 130 30842	BAV21
6480	4822 130 61219	BZX79-B10
6483	4822 130 30842	BAV21
6484	4822 130 30621	1N4148
6485	4822 130 30621	1N4148
6486	4822 130 30621	1N4148
6489	3139 120 52021	BYV29X-500
6490	3139 120 52021	BYV29X-500
6491	3139 120 52021	BYV29X-500
6495	4822 130 30621	1N4148
6496	4822 130 30621	1N4148
6530	4822 130 30621	1N4148
6608	4822 130 34174	BZX79-B4V7
6609	4822 130 31983	BAT85
6610	4822 130 30621	1N4148
6614	5322 130 31938	BYV27-200
6617	4822 130 42488	BYD33D
6618	5322 130 32296	BZV85-C10
6618	5322 130 33635	BZV85-C8V2
6620	4822 130 42488	BYD33D
6790	5322 130 34563	BZX79-C2V7
6791	5322 130 34563	BZX79-C2V7

7409	4822 130 40959	BC547B
7411	5322 130 44349	BC635
7421	9340 210 30127	BU2520DX
7437	4822 130 44568	BC557B
7440	4822 209 70672	LM358N Selected
7441	4822 130 40959	BC547B
7442	4822 130 44568	BC557B
7480	4822 130 11336	STP16NE06FP
7484	4822 209 70672	LM358N Selected
7490	4822 130 44568	BC557B
7600	4822 209 90009	TDA8177
7710	5322 209 86445	LM7805CT
7720	4822 209 11079	LM79M05CT
7730	4822 130 44568	BC557B
7731	4822 130 40959	BC547B
7732	4822 130 40959	BC547B
7733	4822 130 40959	BC547B
7740	4822 209 32641	TDA2616Q
7750	4822 209 32641	TDA2616Q
7760	4822 209 32641	TDA2616Q
7770	4822 209 32641	TDA2616Q
7780	4822 130 40959	BC547B

Top Supply Panel [B]

Various

S002	3122 785 90440	Standby supply repair kit
S003	3122 785 90430	Main supply repair kit
0001	3104 304 19652	Power supply frame
0052	3122 121 24785	Spring fix transistor
0053	3122 121 24785	Spring fix transistor
0056	3122 121 24785	Spring fix transistor
0057	3122 121 24785	Spring fix transistor
0066	3122 121 24785	Spring fix transistor
0067	3122 121 24785	Spring fix transistor
0072	4822 466 93461	Insulator 20 X 25
0150	4822 265 11253	Fuse holder
0151	4822 265 11253	Fuse holder
0302	2422 025 16374	2P Male
0304	4822 265 20723	3P Male
0310	4822 267 10964	9P Male red
0320	4822 267 10974	9P Male
0321	4822 267 10978	7P Male black
0330	2422 025 14904	7P Male
1001	4822 253 30467	Fuse 6,3A
1002	2422 132 07411	Relay 1P 5V 5A
1003	4822 070 33152	Fuse 3.15A
1005	4822 252 60151	Surge Protect
1006	4822 252 51173	Fuse 1,0A
1007	2422 132 07409	Relay 2P 12V 5A

2000	4822 126 13589	470nF 275V
2001	4822 124 11913	22nF 20% 275V
2002	4822 124 11913	22nF 20% 275V
2007	4822 121 41857	10nF 5% 250V
2009	4822 121 41857	10nF 5% 250V
2100	2020 024 90718	10µF 20% 450V
2101	2252 561 55609	68pF 5% 1kV
2102	5322 121 42386	100nF 5% 63V
2103	5322 121 42386	100nF 5% 63V
2104	2020 012 93057	2200µF 20% 16V
2105	5322 122 32818	2.2nF 10% 100V
2106	4822 126 14208	220pF 20% 250V
2111	5322 121 42386	100nF 5% 63V
2201	4822 124 42159	330µF 20% 400V
2202	4822 124 11767	470µF 20% 25V
2203	4822 124 80144	220µF 20% 25V
2204	5322 121 51214	680pF 1% 400V
2205	4822 121 51288	100pF 630V
2207	4822 121 41854	150nF 5% 63V
2208	5322 121 42386	100nF 5% 63V
2210	4822 126 13451	2.2nF 10% 2kV
2211	2222 375 90224	39nF 5% 1kV
2212	4822 126 13862	1.5nF 10% 2kV
2213	4822 126 13862	1.5nF 10% 2kV
2214	4822 126 14504	3.3nF 20% 250V
2215	4822 122 30043	10nF 80% 63V
2216	5322 121 42386	100nF 5% 63V
2217	4822 124 40207	100µF 20% 25V
2219	4822 122 30043	10nF 80% 63V
2220	4822 124 12417	2200µF 20% 25V
2221	4822 124 12417	2200µF 20% 25V
2222	2020 021 91503	1000µF 5% 35V
2223	4822 124 11572	47µF 20% 160V
2225	5322 122 32331	1nF 10% 100V
2226	5322 121 42386	100nF 5% 63V
2227	4822 121 43897	1nF 5% 400V
2228	4822 124 81151	22µF 50V
2230	4822 124 11878	4700µF 16V
2231	4822 121 41854	150nF 5% 63V
2232	4822 122 30043	10nF 80% 63V
2233	4822 122 30043	10nF 80% 63V
2234	2020 021 91503	1000µF 5% 35V
2235	5322 122 32331	1nF 10% 100V
2236	4822 124 11767	470µF 20% 25V
2237	4822 122 31175	1nF 10% 500V
2238	5322 121 42386	100nF 5% 63V
2239	4822 121 42062	150 nF 10% 400V
2240	5322 122 32261	4.7nF 10% 100V
2241	4822 122 30043	10nF 80% 63V
2242	4822 122 33449	47nF 30% 50V
2244	4822 126 12263	220pF 10% 1kV
2245	4822 126 10206	2.2nF 10% 500V
2246	4822 126 10206	2.2nF 10% 500V
2250	5322 122 32331	1nF 10% 100V
2251	4822 121 51305	15nF 10% 50V
2252	5322 122 32818	2.2nF 10% 100V
2253	4822 121 51252	470nF 5% 63V
2260	4822 122 30103	22nF 80% 63V
2261	4822 126 10206	2.2nF 10% 500V
2262	4822 126 10206	2.2nF 10% 500V
2263	5322 122 32311	470pF 10% 100V
2264	5322 122 32311	470pF 10% 100V
2265	2020 300 90565	2.7nF 10% 50V
2266	4822 121 10766	390pF 1% 630V
2267	4822 124 22652	2.2µF 20% 50V
2268	4822 124 22652	2.2µF 20% 50V
2269	5322 121 42386	100nF 5% 63V
2271	5322 122 32331	1nF 10% 100V
2272	5322 122 32331	1nF 10% 100V
2274	4822 122 33799	1nF 10% 1kV
2275	4822 122 31175	1nF 10% 500V
2276	5322 122 32331	1nF 10% 100V
2277	5322 122 32818	2.2nF 10% 100V
2279	4822 121 70654	2.2nF 10% 50V
2280	4822 124 22652	2.2µF 20% 50V
2281	4822 124 22652	2.2µF 20% 50V

3001	2322 595 90022	VDR 1mA/612V max 1120V
3002	3198 013 04710	470Ω 20% 0.5W
3003	4822 116 52256	2k2 5% 0.5W
3004	4822 116 52234	100k 5% 0.5W
3007	4822 116 52283	4k7 5% 0.5W
3008	4822 116 52256	2k2 5% 0.5W
3009	4822 050 21003	10k 1% 0.6W
3108	4822 116 52176	10Ω 5% 0.5W
3110	4822 052 10688	6Ω8 5% 0.33W
3112	4822 050 11002	1k 1% 0.4W
3113	4822 116 52256	2k2 5% 0.5W
3114	4822 050 24702	4k7 1% 0.6W
3115	4822 050 24702	4k7 1% 0.6W
3118	4822 116 52257	22k 5% 0.5W
3120	4822 116 52175	100Ω 5% 0.5W
3121	4822 050 11002	1k 1% 0.4W
3122	4822 116 52175	100Ω 5% 0.5W
3200	4822 052 10569	56Ω 5% 0.33W
3201	4822 116 52175	100Ω 5% 0.5W
3202	4822 116 52303	8k2 5% 0.5W
3203	4822 050 23903	39k 1% 0.6W
3204	4822 116 52264	27k 5% 0.5W
3205	4822 116 52289	5k6 5% 0.5W
3206	4822 050 21003	10k 1% 0.6W
3207	4822 050 21003	10k 1% 0.6W
3208	4822 116 83883	470Ω 5% 0.5W
3209	4822 116 52269	3k3 5% 0.5W
3210	4822 116 83883	470Ω 5% 0.5W
3211	4822 116 83883	470Ω 5% 0.5W
3214	4822 052 10101	100Ω 5% 0.33W
3215	4822 052 10479	47Ω 5% 0.33W
3216	4822 050 11002	1k 1% 0.4W
3217	4822 052 10101	100Ω 5% 0.33W
3218	4822 052 10479	47Ω 5% 0.33W
3219	4822 050 11002	1k 1% 0.4W
3221	4822 052 10109	10Ω 5% 0.33W
3222	4822 116 52249	1k8 5% 0.5W

3223	4822 116 52249	1k8 5% 0.5W
3224	4822 116 52249	1k8 5% 0.5W
3227	4822 052 10129	12Ω 5% 0.33W
3228	2322 257 41123	12k 5% 5W
3229	4822 116 52175	100Ω 5% 0.5W
3230	4822 050 11002	1k 1% 0.4W
3231	4822 050 21002	1k 1% 0.6W
3232	4822 050 21503	15k 1% 0.6W
3233	4822 050 11002	1k 1% 0.4W
3234	4822 116 52175	100Ω 5% 0.5W
3235	4822 116 52207	1k2 5% 0.5W
3236	4822 116 52303	8k2 5% 0.5W
3237	4822 050 21604	160k 1% 0.6W
3238	4822 050 22702	2k7 1% 0.6W
3239	4822 101 11186	470Ω 30% 0.1W
3240	4822 116 52226	560Ω 5% 0.5W
3241	4822 116 52226	560Ω 5% 0.5W
3242	4822 050 25603	56k 1% 0.6W
3243	4822 050 25603	56k 1% 0.6W
3244	4822 050 21003	10k 1% 0.6W
3245	4822 116 83882	39k 5% 0.5W
3246	4822 116 83961	6k8 5%
3247	4822 116 52175	100Ω 5% 0.5W
3248	4822 050 21002	1k 1% 0.6W
3249	4822 050 21003	10k 1% 0.6W
3250	4822 050 28204	820k 1% 0.6W
3251	4822 050 26804	680k 1% 0.6W
3252	4822 050 21003	10k 1% 0.6W
3253	4822 116 52244	15k 5% 0.5W
3254	4822 050 21003	10k 1% 0.6W
3255	4822 116 83961	6k8 5%
3256	4822 050 21003	10k 1% 0.6W
3257	4822 116 52213	180Ω 5% 0.5W
3258	4822 053 20565	5M6 5% 0.25W
3259	4822 116 52244	15k 5% 0.5W
3260	4822 050 24708	4Ω7 1% 0.6W
3261	4822 116 52297	68k 5% 0.5W
3262	4822 116 52234	100k 5% 0.5W
3263	4822 050 26808	6Ω8 1% 0.6W
3264	4822 050 11002	1k 1% 0.4W
3265	4822 050 11002	1k 1% 0.4W
3266	4822 050 21003	10k 1% 0.6W
3267	4822 116 52256	2k2 5% 0.5W
3268	4822 050 24708	4Ω7 1% 0.6W
3269	4822 050 24708	4Ω7 1% 0.6W
3274	4822 116 52195	47Ω 5% 0.5W
3275	4822 116 80176	1Ω 5% 0.5W
3277	4822 050 11002	1k 1% 0.4W
3278	4822 050 21003	10k 1% 0.6W
3279	4822 116 52264	27k 5% 0.5W
3280	4822 116 83884	47k 5% 0.5W
3998	4822 050 21003	10k 1% 0.6W

5000	2422 549 44911	Mainsfilter
5101	8228 001 37422	Standby transf. CE165T
5103	4822 157 71466	2.2µH 20%
5104	4822 157 71466	2.2µH 20%
5105	4822 526 10704	Bead 100mHz
5106	4822 526 10704	Bead 100mHz
5201	8222 289 53691	Driver transf. CE136H
5202	8228 001 37502	Transformer CE423D
5204	8228 001 37404	DC-DC convertor transf.
5205	2422 535 94637	4.7µH 20%
5206	4822 157 11411	Bead 100mHz
5207	4822 157 11411	Bead 100mHz
5208	4822 157 63985	33µH 5%
5209	4822 157 11411	Bead 100mHz
5210	4822 157 51462	10µH 10%
5212	4822 157 11411	Bead 100mHz
5213	4822 157 11411	Bead 100mHz
5215	4822 157 11411	Bead 100mHz
5216	4822 157 11411	Bead 100mHz
5217	4822 526 10704	Bead 100mHz
5219	4822 157 11411	Bead 100mHz
5222	4822 157 71453	27µH 10%
5223	4822 157 71453	27µH 10%
5224	4822 157 71453	27µH 10%
5225	4822 157 11411	Bead 100mHz
5226	4822 157 11411	Bead 100mHz
5227	4822 157 11411	Bead 100mHz
5228	4822 157 11411	Bead 100mHz
5229	4822 157 11411	Bead 100mHz
5230	4822 157 11411	Bead 100mHz
5231	4822 157 11411	Bead 100mHz
5232	4822 157 11771	0.09µH 10%
5240	4822 157 11411	Bead 100mHz
5241	4822 526 10704	Bead 100mHz
5242	4822 526 10704	Bead 100mHz
5243	4822 157 11411	Bead 100mHz
5244	4822 157 11411	Bead 100mHz
5271	4822 157 71453	27µH 10%
5272	2422 535 94637	4.7µH 20%
5273	4822 157 71453	27µH 10%
5274	4822 157 11869	33µH 10%
5275	4822 157 11411	Bead 100mHz
5280	2422 549 44872	Mainsfilter

6008	3198 010 10640	Bridge cell GBU4K
6009	4822 130 30621	1N4148
6101	4822 130 83147	DF06M
6104	9336 018 60133	BZT03-C300
6105	9336 018 60133	BZT03-C300
6106	9322 161 77682	SB540L-7024
6108	4822 130 34278	BZX79-B6V8
6200	4822 130 30621	1N4148
6201	4822 130 30621	1N4148
6202	9337 534 30133	BZD23-C15
6203	9337 534 30133	BZD23-C15
6204	4822 130 30621	1N4148
6205	4822 130 30621	1N4148
6206	4822 130 34441	BZX79-B22
6207	4822 130 30621	1N4148
6208	4822 130 30621	1N4148
6209	4822 130 31024	BZX79-B18
6210	4822 130 42488	BYD33D
6211	4822 130 30621	1N4148
6212	4822 130 30621	1N4148
6213	4822 130 31983	BAT85
6214	4822 130 30621	1N4148
6216	4822 130 30621	1N4148
6217	4822 130 30621	1N4148
6218	9322 131 78682	D4SBL20
6219	4822 130 30621	1N4148
6220	4822 130 30621	1N4148
6221	4822 130 34174	BZX79-B4V7
6222	9322 129 53687	G10DCT
6224	9322 131 78682	D4SBL20
6230	4822 130 83801	PBYR745F
6234	4822 130 34197	BZX79-B12
6235	4822 130 30621	1N4148
6237	9322 161 77682	SB540L-7024
6238	4822 130 34278	BZX79-B6V8
6239	4822 130 34197	BZX79-B12
6270	4822 130 30621	1N4148
6271	4822 130 30621	1N4148

7000	4822 130 40981	BC337-25
7001	4822 130 40959	BC547B
7103	9322 037 99682	TNY256P
7104	9322 149 04682	TCET1102
7105	4822 209 81397	TL431CLPST
7106	4822 130 11421	BT151X-500R
7200	9322 149 04682	TCET1102
7201	4822 130 40959	BC547B
7202	4822 130 44568	BC557B
7203	4822 130 44568	BC557B
7204	4822 130 44568	BC557B
7205	9322 108 21682	MC34067P
7206	9322 132 14687	STP11NB40FP
7207	9322 132 14687	STP11NB40FP
7211	9322 129 22687	L4977A
7212	4822 209 81397	TL431CLPST
7213	4822 209 12334	L4940V85
7230	4822 130 44568	BC557B
7231	4822 130 40959	BC547B
7232	4822 130 11421	BT151X-500R

Mains Switch Panel [E]

Various

0040	3104 307 97621	Mainsknob FL11
0046	3104 304 23471	Bracket mains unit FL11
0151	4822 256 91766	Led holder
0152	4822 256 91766	Led holder
0170	4822 256 10562	Photo diode holder
0201	2422 025 16268	7P Male
0202	2422 025 16268	2P Male
0241	2422 025 06354	9P Male
0245	4822 267 10748	3P Male
1050	9322 154 48667	IR Receiver TSOP2236
1051	2422 128 02972	Mains switch 2P 8/128A
8202	3104 301 08291	Cable 2P3 560mm black
8241	3104 301 09381	Cable 9P 680mm white

2051	4822 124 41584	100µF 20% 10V
2070	4822 126 13879	220nF 20% 16V
2071	4822 124 40248	10µF 20% 63V

3050	4822 117 13577	330Ω 1% 1.25W
3051	4822 051 30471	470Ω 5% 0.062W
3054	4822 051 20471	470Ω 5% 0.1W
3057	4822 053 21335	3M3 5% 0.5W
3061	4822 051 30332	3k3 5% 0.062W
3063	4822 052 10478	4Ω7 5% 0.33W
3064	4822 052 10478	4Ω7 5% 0.33W
3066	4822 053 21335	3M3 5% 0.5W
3070	4822 051 30334	330k 5% 0.062W
3071	4822 051 30334	330k 5% 0.062W
3072	4822 051 30102	1k 5% 0.062W
3073	4822 051 30103	10k 5% 0.062W
3074	4822 051 30472	4k7 5% 0.062W
3075	4822 051 30472	4k7 5% 0.062W
3076	4822 051 30682	6k8 5% 0.062W
3077	4822 051 30103	10k 5% 0.062W
3078	4822 051 30102	1k 5% 0.062W
3079	4822 051 30332	3k3 5% 0.062W
3082	4822 051 30008	Jumper 0603
3998	4822 116 52206	120Ω 5% 0.5W

6051	4822 209 72895	TLUV5320
6052	9322 150 78676	LED IR TSAL6400
6053	4822 130 10838	UDZ3.3B
6070	4822 130 11595	BPW46

7050	4822 130 41246	BC327-25
7070	4822 209 70672	LM358N Selected

Picture Tube Panel [F]

Various

0041	3122 121 24785	SPRING fix IC
0042	3122 121 24785	SPRING fix IC
0043	3122 121 24785	SPRING fix IC
0297	2422 500 80036	CRT socket 9P
0324	4822 267 10972	5P
0334	4822 267 10973	1P
0340	4822 267 10974	9P
0383	4822 267 10967	3P
1382	2422 025 17408	9P male

2330	2020 552 93645	39pF 5% 50V
2332	5322 126 10223	4.7nF 10% 63V
2336	4822 126 14585	100nF 10% 50V
2337	5322 121 42489	33nF 5% 250V
2340	2020 552 93645	39pF 5% 50V
2342	5322 126 10223	4.7nF 10% 63V
2346	4822 126 14585	100nF 10% 50V
2347	5322 121 42489	33nF 5% 250V
2350	2020 552 93645	39pF 5% 50V
2352	5322 126 10223	4.7nF 10% 63V
2356	4822 126 14585	100nF 10% 50V
2357	5322 121 42489	33nF 5% 250V
2360	5322 122 31863	330pF 5% 63V
2370	4822 124 11565	10µF 20% 250V
2372	4822 124 40784	3300µF 20% 16V
2374	5322 122 34098	10nF 10% 63V
2381	4822 126 13599	3.3nF 10% 500V
2382	4822 122 31177	470pF 10% 500V
2383	4822 124 41584	100µF 20% 10V
2384	4822 124 41584	100µF 20% 10V
2393	5322 122 32654	22nF 10% 63V
2397	4822 121 70594	1nF 5% 2kV
2398	4822 121 70383	6.8nF 5% 2kV
2410	2020 552 93683	1.2nF 10% 50V
2411	4822 124 40764	22µF 100V
2420	4822 126 14238	2.2nF 50V
2421	4822 126 14494	22nF 10% 25V
2422	2238 586 15628	2.7nF 10% 50V
2423	2238 586 15628	2.7nF 10% 50V
2424	4822 126 14494	22nF 10% 25V
2425	4822 126 14494	22nF 10% 25V
2426	4822 126 14494	22nF 10% 25V

2427	2020 552 93683	1.2nF 10% 50V
2428	4822 126 14238	2.2nF 50V
2429	4822 126 14494	22nF 10% 25V
2440	4822 126 14043	1µF 20% 16V
2475	4822 122 33761	22pF 5% 50V
2484	4822 122 33761	22pF 5% 50V
2485	4822 122 33761	22pF 5% 50V
2489	4822 122 33761	22pF 5% 50V

3325	4822 051 20332	3k3 5% 0.1W
3329	4822 116 52283	4k7 5% 0.5W
3330	4822 051 30181	180Ω 5% 0.062W
3331	4822 117 12968	820Ω 5% 0.62W
3333	2120 105 93438	33k 2W
3334	4822 116 83881	390Ω 5% 0.5W
3335	4822 116 83872	220Ω 5% 0.5W
3336	4822 117 11373	100Ω 1%
3339	4822 051 10102	1k 2% 0.25W
3340	4822 051 30181	180Ω 5% 0.062W
3341	4822 117 12968	820Ω 5% 0.62W
3343	2120 105 93438	33k 2W
3344	4822 116 83881	390Ω 5% 0.5W
3345	4822 116 83872	220Ω 5% 0.5W
3346	4822 117 11373	100Ω 1%
3349	4822 051 10102	1k 2% 0.25W
3350	4822 051 30181	180Ω 5% 0.062W
3351	4822 117 12968	820Ω 5% 0.62W
3353	2120 105 93438	33k 2W
3354	4822 116 83881	390Ω 5% 0.5W
3355	4822 116 83872	220Ω 5% 0.5W
3356	4822 117 11373	100Ω 1%
3359	4822 051 10102	1k 2% 0.25W
3360	4822 050 11002	1k 1% 0.4W
3363	4822 051 20008	Jumper 0805
3364	4822 051 20008	Jumper 0805
3365	4822 117 12925	47k 1% 0.063W
3372	4822 052 10108	1Ω 5% 0.33W
3373	4822 052 10151	150Ω 5% 0.33W
3374	4822 052 10151	150Ω 5% 0.33W
3382	4822 116 52191	33Ω 5% 0.5W
3383	4822 117 13016	VDR 1mA/50V MAX 115V
3385	4822 117 13016	VDR 1mA/50V MAX 115V
3386	4822 116 52191	33Ω 5% 0.5W
3396	3198 013 01520	1k5 2% 0.5W
3397	3198 013 01520	1k5 2% 0.5W
3401	4822 051 30101	100Ω 5% 0.062W
3402	4822 051 30101	100Ω 5% 0.062W
3403	4822 051 30101	100Ω 5% 0.062W
3404	4822 116 52238	12k 5% 0.5W
3404	4822 116 52291	56k 5% 0.5W
3410	4822 117 12968	820Ω 5% 0.62W
3411	4822 117 13632	100k 1% 0.62W 0603
3413	4822 117 12968	820Ω 5% 0.62W
3414	4822 117 12077	2k7 5% 5W
3416	4822 117 13632	100k 1% 0.62W
3421	4822 051 30273	27k 5% 0.062W
3422	4822 116 52226	560Ω 5% 0.5W
3423	4822 051 30471	470Ω 5% 0.062W
3424	4822 117 10361	680Ω 1% 0.1W
3425	4822 051 10102	1k 2% 0.25W
3426	4822 051 30332	3k3 5% 0.062W
3427	4822 051 30561	560Ω 5% 0.062W
3431	4822 051 30273	27k 5% 0.062W
3433	4822 051 30471	470Ω 5% 0.062W
3434	4822 117 10361	680Ω 1% 0.1W
3435	4822 051 30102	1k 5% 0.062W
3436	4822 051 30332	3k3 5% 0.062W
3437	4822 051 30561	560Ω 5% 0.062W
3441	4822 051 30273	27k 5% 0.062W
3443	4822 051 30471	470Ω 5% 0.062W
3444	4822 117 10361	680Ω 1% 0.1W
3445	4822 051 10102	1k 2% 0.25W
3446	4822 051 30332	3k3 5% 0.062W
3447	4822 051 30561	560Ω 5% 0.062W
3448	4822 117 12968	820Ω 5% 0.62W
3450	4822 051 30102	1k 5% 0.062W
3451	4822 051 30689	68Ω 5% 0.063W
3452	4822 117 12925	47k 1% 0.063W
3453	4822 051 30392	3k9 5% 0.063W
3454	4822 117 12968	820Ω 5% 0.62W
3455	4822 051 30472	4k7 5% 0.062W
3456	4822 051 30181	180Ω 5% 0.062W
3460	3198 021 32250	2M2 5%
3462	3198 021 32250	2M2 5%
3463	3198 021 32250	2M2 5%
3468	3198 021 32250	2M2 5%
3470	4822 116 81154	2Ω2 5% 0.5W
3472	4822 116 81154	2Ω2 5% 0.5W
3473	4822 116 81154	2Ω2 5% 0.5W
3474	4822 051 30102	1k 5% 0.062W
3475	4822 117 12925	47k 1% 0.063W
3476	4822 051 30103	10k 5% 0.062W
3477	4822 051 30109	10Ω 5% 0.062W
3478	4822 116 81154	2Ω2 5% 0.5W
3483	4822 051 30102	1k 5% 0.062W
3484	4822 117 12925	47k 1% 0.063W
3485	4822 117 12925	47k 1% 0.063W
3487	4822 051 30103	10k 5% 0.062W
3488	4822 051 30109	10Ω 5% 0.062W
3489	4822 117 12925	47k 1% 0.063W
3492	4822 051 30101	100Ω 5% 0.062W
3493	4822 116 52191	33Ω 5% 0.5W
3494	4822 051 30101	100Ω 5% 0.062W
3495	4822 051 20479	47Ω 5% 0.1W
3999	4822 117 10353	150Ω 1% 0.1W
3999	4822 117 11503	220Ω 1% 0.1W
3999	4822 117 13577	330Ω 1% 1.25W
4xxx	4822 051 10008	Jumper 1206
4xxx	4822 051 20008	Jumper 0805

5372	4822 157 51216	5.6µH 10%
5373	4822 157 51216	5.6µH 10%
5400	4822 157 11778	5.6µH 10%
5401	2722 122 00334	Del line 90nS SDL-5127
5402	2722 122 00334	Del line 90nS SDL-5127
5403	2722 122 00334	Del line 90nS SDL-5127

6325	4822 130 10838	UDZ3.3B
6335	9340 553 52115	BAS321
6336	9340 553 52115	BAS321
6345	9340 553 52115	BAS321
6346	9340 553 52115	BAS321
6355	9340 553 52115	BAS321
6356	9340 553 52115	BAS321
6373	4822 130 42488	BYD33D
6374	4822 130 82512	BYV29F-400
6412	4822 130 11397	BAS316
6413	4822 130 11397	BAS316
6414	4822 130 11397	BAS316
6415	4822 130 11397	BAS316

7330	9352 626 34112	TDA6120Q/N2
7340	9352 626 34112	TDA6120Q/N2
7350	9352 626 34112	TDA6120Q/N2
7412	4822 130 40824	BD140
7413	4822 130 40823	BD139
7414	4822 130 40824	BD140
7415	4822 130 40823	BD139
7416	4822 130 60511	BC847B
7417	4822 130 60373	BC856B
7418	4822 130 60511	BC847B
7419	4822 130 60373	BC856B
7420	4822 130 60511	BC847B
7421	4822 130 60373	BC856B
7422	5322 130 42718	BFS20
7423	4822 130 60511	BC847B
7424	5322 130 42718	BFS20
7425	5322 130 42718	BFS20
7426	4822 130 60373	BC856B
7427	4822 130 60511	BC847B
7428	4822 130 60373	BC856B
7431	4822 130 60383	BF824

DC-shift Panel [G]

Various

0393	2422 025 16218	5P male
0398	4822 267 11043	3P male

2030	4822 122 31177	470pF 10% 500V
2031	4822 124 40207	100µF 20% 25V
2032	4822 124 40207	100µF 20% 25V
2033	4822 122 31177	470pF 10% 500V
2034	4822 121 42408	220nF 10% 50V

3030	4822 117 12159	150Ω 5% 2W
3030	4822 053 11159	15Ω 5% 2W
3031	4822 052 10108	1Ω 5% 0.33W
3032	4822 052 10108	1Ω 5% 0.33W
3033	4822 053 11159	15Ω 5% 2W
3034	4822 116 83872	220Ω 5% 0.33W
3040	4822 053 11101	100Ω 5% 2W

5030	4822 157 70006	DC-shift coil

6030	4822 130 42488	BYD33D
6033	4822 130 42488	BYD33D

7030	4822 130 41109	BD135-16
7031	4822 130 41194	BD136-16

DAF Panel [I]

Various

0001	3104 304 20301	DAF bracket
0317	4822 265 20723	3P male
0391	4822 267 10973	1P
0396	2422 025 16374	2P male
0397	4822 267 10774	2P male red
0398	4822 267 11043	3P male
1010	2322 460 91631	DAF potmeter 36" RF
1016	2322 460 91641	DAF potmeter 32" RF
8300	4822 320 20216	Focus cable 364 mm
8301	4822 320 20216	Focus cable 364 mm
8396	3104 311 01951	CableH 2P3/560mm/2P4

2800	2222 375 90188	390pF 5% 2kV
2800	2222 375 90498	470pF 5% 2kV
2890	2222 375 90188	390pF 5% 2kV
2890	2222 375 90276	220pF 5% 2kV

3050	4822 101 11191	10k 30% LIN 0.1W
3898	4822 116 21211	VDR 420V
3899	4822 116 21211	VDR 420V
3998	4822 116 52219	330Ω 5% 0.5W

5800	4822 148 81242	Coil CU20C2

Small Signal Panel [K]

Various

0002	2422 486 80873	IC socket 42P DIL
0008	2422 486 80928	IC socket 8P DIL
0031	3104 304 22851	SSP bracket
0032	3104 304 19646	Module support bracket
0310	4822 267 10964	9P male red
0311	4822 267 10978	7P male black
0315	4822 267 10979	9P male black
0328	4822 267 10981	11P male black
0333	4822 267 10962	11P
0340	4822 267 10974	9P male
0341	4822 267 10974	9P male
0344	4822 267 10963	3P male
0348	4822 267 11043	3P
0351	4822 267 10962	11P male
0352	4822 267 10962	11P male
0353	4822 267 10974	9P male
0356	4822 267 10963	3P male
0360	4822 267 10967	3P male
0361	4822 267 10974	9P male
0362	4822 267 10974	9P male
0373	4822 267 10978	7P male
0375	4822 267 10676	1P
0381	4822 267 10963	3P male
1001	4822 242 10972	Crystal 6MHz
1101	3139 147 14591	Splitter PS1311/I
1102	3139 147 18831	Tuner UV1316/A I X-3
1102	3139 147 18841	Tuner UV1316/A P X-3
1105	4822 242 10688	Filter OFWK9456M
1107	4822 242 72211	Filter 5.5MHz
1109	4822 242 81436	Filter OFWK3953M
1198	3104 301 08351	Cable phono-phono 120mm

1201	4822 267 10771	Socket 2 x scart
1202	4822 267 10771	Socket 2 x scart
1305	5322 242 73686	Crystal 12 MHz
1525	4822 242 10695	Crystal 4.433 619 MHz
1528	4822 242 10697	Crystal 3.579 545 MHz
1751	4822 242 10434	Crystal 18.432 MHz
8310	3104 301 08303	Cable 9P 680m red
8340	4822 320 12508	Cable 9P 400mm White
8360	3119 107 17071	Cable 3P 220mm Black
8382	3104 311 00340	Service cable 9P SSP-PTP

⊣⊢

2001	4822 126 14585	100nF 10% 50V
2002	4822 126 14305	100nF 10% 16V 0603
2003	4822 126 14305	100nF 10% 16V 0603
2005	4822 126 14305	100nF 10% 16V 0603
2006	4822 126 14305	100nF 10% 16V 0603
2007	4822 126 14305	100nF 10% 16V 0603
2008	4822 126 14305	100nF 10% 16V 0603
2009	4822 126 14305	100nF 10% 16V 0603
2010	4822 126 14305	100nF 10% 16V 0603
2011	4822 126 14305	100nF 10% 16V 0603
2012	4822 126 14305	100nF 10% 16V 0603
2013	4822 126 14076	220nF 20-80% 25V
2014	4822 126 11669	27pF
2015	4822 126 14585	100nF 10% 50V
2016	5322 122 32659	33pF 5% 50V
2021	4822 126 14585	100nF 10% 50V
2022	4822 126 14076	220nF 20-80% 25V
2023	4822 126 14305	100nF 10% 16V 0603
2024	5322 126 11578	1nF 10% 50V 0603
2025	4822 126 14305	100nF 10% 16V 0603
2026	4822 126 14305	100nF 10% 16V 0603
2027	4822 126 14305	100nF 10% 16V 0603
2028	4822 126 14305	100nF 10% 16V 0603
2029	4822 124 40433	47µF 20% 25V
2030	4822 124 40433	47µF 20% 25V
2031	4822 126 14305	100nF 10% 16V 0603
2032	4822 126 14305	100nF 10% 16V 0603
2035	4822 126 14585	100nF 10% 50V
2037	4822 126 14585	100nF 10% 50V
2038	4822 126 14585	100nF 10% 50V
2039	4822 126 13883	220pF 5% 50V
2040	4822 122 33177	10nF 20% 50V
2042	4822 122 33777	47pF 5% 63V
2043	4822 122 33777	47pF 5% 63V
2044	4822 122 33777	47pF 5% 63V
2045	4822 124 41584	100µF 20% 10V
2046	4822 126 14585	100nF 10% 50V
2049	4822 126 14226	82pF 5% 50V 0603
2050	4822 126 14226	82pF 5% 50V 0603
2051	4822 126 14226	82pF 5% 50V 0603
2052	4822 126 14226	82pF 5% 50V 0603
2053	4822 126 14226	82pF 5% 50V 0603
2054	4822 126 14226	82pF 5% 50V 0603
2101	4822 124 40196	220µF 20% 16V
2102	4822 126 13473	220nF 80-20% 50V
2104	4822 122 33177	10nF 20% 50V
2105	4822 122 33177	10nF 20% 50V
2106	4822 122 33575	220pF 5% 63V
2107	4822 126 13694	68pF 1% 63V
2108	5322 122 31873	2.7pF 5% 100V
2109	4822 124 22652	2.2µF 20% 50V
2110	4822 124 21913	1µF 20% 63V
2111	4822 126 14585	100nF 10% 50V
2112	4822 122 33891	3.3nF 10% 63V
2116	4822 124 81044	470µF 20% 6.3V
2117	4822 126 13482	470nF 80/20% 16V
2118	5322 122 32967	5.6pF 10% 63V
2119	5322 122 31863	330pF 5% 63V
2120	4822 126 14076	220nF 20-80% 25V
2121	4822 124 40248	10µF 20% 63V
2125	4822 122 33177	10nF 20% 50V
2126	4822 124 40433	47µF 20% 25V
2127	4822 126 14076	220nF 20-80% 25V
2202	5322 122 31863	330pF 5% 63V
2203	5322 122 31863	330pF 5% 63V
2204	4822 126 14305	100nF 10% 16V 0603
2205	4822 124 40248	10µF 20% 63V
2206	5322 122 32531	100pF 5% 50V
2209	5322 122 31863	330pF 5% 63V
2210	5322 122 32531	100pF 5% 50V
2212	4822 124 40248	10µF 20% 63V
2213	4822 126 14305	100nF 10% 16V 0603
2215	5322 122 31863	330pF 5% 63V
2216	5322 122 31863	330pF 5% 63V
2217	5322 122 32531	100pF 5% 50V
2218	5322 122 31647	1nF 10% 63V
2219	5322 122 31863	330pF 5% 63V
2220	5322 122 32531	100pF 5% 50V
2221	4822 126 14076	220nF 20-80% 25V
2222	4822 124 81286	47µF 20% 16V
2224	5322 122 32531	100pF 5% 50V
2226	5322 122 32531	100pF 5% 50V
2240	5322 122 32531	100pF 5% 50V
2241	5322 122 32531	100pF 5% 50V
2242	4822 124 23002	10µF 16V
2243	4822 126 14076	220nF 20-80% 25V
2244	4822 126 14076	220nF 20-80% 25V
2245	4822 126 14076	220nF 20-80% 25V
2246	4822 126 14076	220nF 20-80% 25V
2247	4822 126 14076	220nF 20-80% 25V
2248	4822 126 14076	220nF 20-80% 25V
2249	4822 126 14076	220nF 20-80% 25V
2250	4822 126 14076	220nF 20-80% 25V
2251	4822 124 80151	47µF 16V
2258	4822 126 14076	220nF 20-80% 25V
2300	4822 124 40196	220µF 20% 16V
2301	4822 126 14585	100nF 10% 50V
2302	4822 126 14585	100nF 10% 50V
2303	4822 124 22652	2.2µF 20% 50V
2304	4822 126 14305	100nF 10% 16V 0603
2307	4822 122 33741	10pF 10% 50V
2308	4822 122 33741	10pF 10% 50V
2311	4822 124 40196	220µF 20% 16V
2312	4822 126 14305	100nF 10% 16V 0603
2313	4822 126 13694	68pF 1% 63V
2315	5322 122 34098	10nF 10% 63V
2321	4822 126 13881	470pF 5% 50V
2322	4822 126 13881	470pF 5% 50V
2323	4822 121 70661	100nF 5% 63V
2324	2222 396 05333	33nF 5% 50V
2331	5322 126 11583	10nF 10% 50V 0603
2340	4822 126 13881	470pF 5% 50V
2343	5322 122 32448	10pF 5% 63V
2344	4822 126 14305	100nF 10% 16V 0603
2351	2020 552 96326	220nF 10% 16V
2403	4822 126 14585	100nF 10% 50V
2404	4822 126 14585	100nF 10% 50V
2405	4822 126 14585	100nF 10% 50V
2406	4822 126 14305	100nF 10% 16V 0603
2407	4822 126 14305	100nF 10% 16V 0603
2408	4822 126 14305	100nF 10% 16V 0603
2422	4822 124 22652	2.2µF 20% 50V
2423	4822 124 40769	4.7µF 20% 100V
2425	4822 122 33761	22pF 5% 50V
2427	5322 126 10511	1nF 5% 50V
2436	4822 124 80151	47µF 16V
2501	4822 126 14305	100nF 10% 16V 0603
2502	4822 126 14305	100nF 10% 16V 0603
2503	4822 126 14305	100nF 10% 16V 0603
2504	4822 126 14305	100nF 10% 16V 0603
2505	4822 126 14305	100nF 10% 16V 0603
2506	4822 126 14305	100nF 10% 16V 0603
2507	4822 126 14305	100nF 10% 16V 0603
2508	4822 126 14305	100nF 10% 16V 0603
2509	4822 126 14305	100nF 10% 16V 0603
2510	4822 126 14305	100nF 10% 16V 0603
2511	4822 126 14305	100nF 10% 16V 0603
2512	4822 126 14305	100nF 10% 16V 0603
2520	4822 126 14305	100nF 10% 16V 0603
2521	4822 126 14305	100nF 10% 16V 0603
2522	5322 126 11579	3.3nF 10% 63V
2525	4822 126 14507	18pF 5% 50V 0603
2528	4822 122 33752	15pF 5% 50V
2532	4822 126 14043	1µF 20% 16V
2534	5322 126 10223	4.7nF 10% 63V
2535	4822 126 14491	2.2µF 10V
2536	4822 126 14585	100nF 10% 50V
2537	4822 126 14585	100nF 10% 50V
2538	4822 124 40433	47µF 20% 25V
2539	4822 126 14305	100nF 10% 16V 0603
2540	4822 124 40433	47µF 20% 25V
2541	5322 122 32654	22nF 10% 63V
2545	4822 126 14305	100nF 10% 16V 0603
2550	4822 126 14305	100nF 10% 16V 0603
2553	4822 126 14585	100nF 10% 50V
2554	4822 126 14585	100nF 10% 50V
2555	4822 126 14305	100nF 10% 16V 0603
2556	4822 126 14305	100nF 10% 16V 0603
2557	4822 126 14305	100nF 10% 16V 0603
2558	4822 126 14305	100nF 10% 16V 0603
2559	4822 124 40207	100µF 20% 25V
2560	4822 126 14305	100nF 10% 16V 0603
2561	4822 124 81286	47µF 20% 16V
2562	4822 126 14305	100nF 10% 16V 0603
2564	4822 122 33177	10nF 20% 50V
2567	5322 126 10733	680pF 5% 50V
2568	4822 122 31765	100pF 2% 63V
2569	4822 122 33177	10nF 20% 50V
2570	4822 122 31765	100pF 2% 63V
2751	4822 126 14305	100nF 10% 16V 0603
2752	4822 126 13692	47pF 1% 63V
2753	4822 122 32927	220nF 20% 50V
2754	5322 122 32268	470pF 5% 63V
2755	5322 122 32268	470pF 5% 63V
2756	5322 122 32268	470pF 5% 63V
2757	5322 122 32268	470pF 5% 63V
2758	5322 122 32268	470pF 5% 63V
2759	5322 122 32268	470pF 5% 63V
2760	5322 122 32268	470pF 5% 63V
2761	4822 122 32927	220nF 20% 50V
2762	4822 122 32927	220nF 20% 50V
2763	5322 122 32268	470pF 5% 63V
2764	5322 122 32268	470pF 5% 63V
2765	4822 124 12095	100µF 20% 16V
2766	4822 124 12095	100µF 20% 16V
2767	5322 122 32286	3.3pF 5% 50V
2768	5322 122 32286	3.3pF 5% 50V
2773	5322 122 31647	1nF 10% 63V
2774	5322 122 31647	1nF 10% 63V
2777	4822 124 23002	10µF 16V
2778	4822 124 23002	10µF 16V
2779	4822 126 14585	100nF 10% 50V
2780	4822 124 23002	10µF 16V
2781	4822 126 14585	100nF 10% 50V
2782	4822 124 23002	10µF 16V
2783	4822 126 13482	470nF 80/20% 16V
2784	4822 126 13482	470nF 80/20% 16V
2785	5322 122 31647	1nF 10% 63V
2786	5322 122 31647	1nF 10% 63V
2787	5322 126 10223	4.7nF 10% 63V
2788	5322 126 10223	4.7nF 10% 63V
2790	4822 122 33761	22pF 5% 50V
2791	4822 122 33761	22pF 5% 50V
2792	5322 126 11583	10nF 10% 50V 0603
2793	4822 122 33177	10nF 20% 50V
2801	4822 122 33761	22pF 5% 50V
2802	4822 124 12398	4.7µF 20% 25V
2803	4822 124 12398	4.7µF 20% 25V
2804	4822 122 32927	220nF 20% 50V
2805	4822 122 32927	220nF 20% 50V
2808	4822 124 12095	100µF 20% 16V
2809	5322 126 10511	1nF 5% 50V
2810	5322 126 10511	1nF 5% 50V
2811	5322 126 10511	1nF 5% 50V
2842	4822 124 23002	10µF 16V
2843	4822 126 14491	2.2µF 10V
2846	4822 124 23002	10µF 16V
2847	4822 124 23002	10µF 16V
2848	4822 124 23002	10µF 16V
2849	4822 124 23002	10µF 16V
2852	4822 122 32927	220nF 20% 50V
2853	4822 122 32927	220nF 20% 50V
2854	4822 122 32927	220nF 20% 50V
2855	4822 122 32927	220nF 20% 50V
2856	4822 122 32927	220nF 20% 50V
2857	4822 122 32927	220nF 20% 50V
2858	4822 122 32927	220nF 20% 50V
2859	4822 122 32927	220nF 20% 50V
2860	4822 122 32927	220nF 20% 50V
2861	4822 122 32927	220nF 20% 50V
2864	4822 124 81151	22µF 50V
2869	4822 124 40196	220µF 20% 16V
2870	4822 122 32927	220nF 20% 50V
2871	4822 122 32927	220nF 20% 50V
2872	4822 124 40207	100µF 20% 25V
2873	5322 126 10511	1nF 5% 50V
2890	4822 122 33177	10nF 20% 50V
2891	4822 126 14585	100nF 10% 50V
2897	4822 126 14305	100nF 10% 16V 0603

⊟

3001	2322 704 66201	620Ω 1% 0.062W
3003	3198 031 14710	4X470Ω 5% 0.63W network
3004	3198 031 14710	4X470Ω 5% 0.63W network
3005	3198 031 14710	4X470Ω 5% 0.63W network
3006	4822 051 30103	10k 5% 0.062W
3007	4822 051 30103	10k 5% 0.062W
3009	3198 031 14710	4X470Ω 5% 0.63W network
3010	4822 051 30103	10k 5% 0.062W
3011	4822 051 30472	4k7 5% 0.062W
3023	3198 031 14710	4X470Ω 5% 0.63W network
3024	4822 051 30471	470Ω 5% 0.062W
3027	3198 031 14710	4X470Ω 5% 0.63W network
3028	3198 031 14710	4X470Ω 5% 0.63W network
3029	4822 051 30471	470Ω 5% 0.062W
3030	3198 031 11010	4X100Ω 5% 0.63W network
3031	4822 117 13577	330Ω 1% 1.25W
3032	4822 051 30471	470Ω 5% 0.062W
3033	4822 117 13523	220Ω 5% RESN 0.63W
3034	4822 051 30103	10k 5% 0.062W
3035	4822 051 30103	10k 5% 0.062W
3036	4822 117 13524	2.2k 5% 0.63W
3039	4822 051 30333	33k 5% 0.062W
3041	4822 117 10833	10k 1% 0.1W
3042	4822 051 20474	470k 5% 0.1W
3043	4822 051 30472	4k7 5% 0.062W

3045	4822 051 20273	27k 5% 0.1W
3047	4822 117 13525	24k 1% 0.62W 0603
3048	4822 117 13526	150Ω 5% 0.63W
3059	4822 051 30331	330Ω 5% 0.062W
3062	4822 117 12925	47k 1% 0.063W 0603
3063	4822 051 30472	4k7 5% 0.062W
3066	4822 117 10833	10k 1% 0.1W
3067	4822 051 30472	4k7 5% 0.062W
3068	4822 051 30103	10k 5% 0.062W
3069	4822 051 30689	68Ω 5% 0.063W 0603
3070	4822 051 30103	10k 5% 0.062W
3071	4822 051 30472	4k7 5% 0.062W
3072	4822 117 10834	47k 1% 0.1W
3073	4822 051 20472	4k7 5% 0.1W
3075	4822 051 30472	4k7 5% 0.062W
3076	4822 051 30472	4k7 5% 0.062W
3080	3198 031 11010	4X100Ω 5% 0.63W network
3086	4822 051 30101	100Ω 5% 0.062W
3090	3198 031 11010	4X100Ω 5% 0.63W network
3091	3198 031 11010	4X100Ω 5% 0.63W network
3092	3198 031 11010	4X100Ω 5% 0.63W network
3093	3198 031 11010	4X100Ω 5% 0.63W network
3094	3198 031 11010	4X100Ω 5% 0.63W network
3095	3198 031 11010	4X100Ω 5% 0.63W network
3096	3198 031 11010	4X100Ω 5% 0.63W network
3097	3198 031 11010	4X100Ω 5% 0.63W network
3098	3198 031 11010	4X100Ω 5% 0.63W network
3099	3198 031 11010	4X100Ω 5% 0.63W network
3102	4822 117 10833	10k 1% 0.1W
3103	4822 051 20008	Jumper 0805
3104	4822 051 20008	Jumper 0805
3106	4822 051 20479	47Ω 5% 0.1W
3110	4822 117 11449	2k2 5% 0.1W 0805
3111	4822 117 11449	2k2 5% 0.1W 0805
3112	4822 051 20472	4k7 5% 0.1W
3114	4822 051 20472	4k7 5% 0.1W
3118	4822 051 20391	390Ω 5% 0.1W
3119	4822 051 20479	47Ω 5% 0.1W
3124	4822 051 30101	100Ω 5% 0.062W
3133	4822 117 12955	2k7 1% 0.1W 0805
3135	4822 051 20472	4k7 5% 0.1W
3136	4822 117 11503	220Ω 1% 0.1W
3137	4822 051 10102	1k 2% 0.25W
3138	4822 117 11448	180Ω 1% 0.1W
3139	4822 117 11139	1k5 1% 0.1W
3140	4822 116 83933	15k 1% 0.1W
3141	4822 051 30333	33k 5% 0.062W
3142	4822 051 30102	1k 5% 0.062W
3143	4822 051 30102	1k 5% 0.062W
3145	4822 051 30101	100Ω 5% 0.062W
3146	4822 051 20223	22k 5% 0.1W
3147	4822 052 10109	10Ω 5% 0.33W
3152	4822 051 20471	470Ω 5% 0.1W
3153	4822 051 10102	1k 2% 0.25W
3154	4822 117 11503	220Ω 1% 0.1W
3155	4822 117 11503	220Ω 1% 0.1W
3200	4822 117 10353	150Ω 1% 0.1W
3201	4822 117 10353	150Ω 1% 0.1W
3202	4822 117 10353	150Ω 1% 0.1W
3203	4822 117 10353	150Ω 1% 0.1W
3204	4822 052 10688	6Ω8 5% 0.33W
3205	4822 051 20471	470Ω 5% 0.1W
3206	4822 117 12521	68Ω 1% 0.1W
3207	4822 051 20561	560Ω 5% 0.1W
3208	4822 051 20399	39Ω 5% 0.1W
3209	4822 117 11927	75Ω 1% 0.1W
3210	4822 117 11927	75Ω 1% 0.1W
3211	4822 117 11927	75Ω 1% 0.1W
3212	4822 051 20399	39Ω 5% 0.1W
3213	4822 117 11927	75Ω 1% 0.1W
3215	4822 117 11927	75Ω 1% 0.1W
3216	4822 051 20822	8k2 5% 0.1W
3218	4822 051 20392	3k9 5% 0.1W
3219	4822 051 10102	1k 2% 0.25W
3220	4822 051 10102	1k 2% 0.25W
3221	4822 117 10353	150Ω 1% 0.1W
3222	4822 117 10353	150Ω 1% 0.1W
3223	4822 117 10353	150Ω 1% 0.1W
3224	4822 117 10353	150Ω 1% 0.1W
3225	4822 052 10688	6Ω8 5% 0.33W
3227	4822 051 20399	39Ω 5% 0.1W
3228	4822 051 30101	100Ω 5% 0.062W
3229	4822 051 30103	10k 5% 0.062W
3230	4822 051 20561	560Ω 5% 0.1W
3231	4822 051 20399	39Ω 5% 0.1W
3232	4822 117 12521	68Ω 1% 0.1W
3235	4822 117 10353	150Ω 1% 0.1W
3236	4822 117 11927	75Ω 1% 0.1W
3240	4822 117 11927	75Ω 1% 0.1W
3241	4822 117 10353	150Ω 1% 0.1W
3242	4822 051 20822	8k2 5% 0.1W
3243	4822 117 10353	150Ω 1% 0.1W
3244	4822 051 10102	1k 2% 0.25W
3245	4822 051 20392	3k9 5% 0.1W
3246	4822 051 10102	1k 2% 0.25W
3248	4822 117 13577	330Ω 1% 1.25W
3249	4822 117 12955	2k7 1% 0.1W 0805
3250	4822 117 11139	1k5 1% 0.1W
3252	4822 051 20339	33Ω 5% 0.1W
3253	4822 051 20391	390Ω 5% 0.1W
3254	4822 051 10102	1k 2% 0.25W
3255	4822 051 10102	1k 2% 0.25W
3256	4822 117 11927	75Ω 1% 0.1W
3259	4822 051 30273	27k 5% 0.062W
3262	4822 117 12925	47k 1% 0.063W 0603
3263	4822 051 30221	220Ω 5% 0.062W
3264	4822 051 20822	8k2 5% 0.1W
3265	4822 117 12955	2k7 1% 0.1W 0805
3266	4822 117 10833	10k 1% 0.1W
3269	4822 051 30561	560Ω 5% 0.062W
3270	4822 051 10102	1k 2% 0.25W
3271	4822 051 10102	1k 2% 0.25W
3273	4822 051 20822	8k2 5% 0.1W
3274	4822 117 12955	2k7 1% 0.1W 0805
3275	4822 051 30339	33Ω 5% 0.062W
3276	4822 051 30391	390Ω 5% 0.062W
3277	4822 051 30222	2k2 5% 0.062W
3278	4822 051 30331	330Ω 5% 0.062W
3279	4822 051 30151	150Ω 5% 0.062W
3281	4822 117 12903	1k8 1% 0.063W 0603
3282	4822 117 13632	100k 1% 0.62W 0603
3283	4822 051 30683	68k 5% 0.062W
3284	4822 117 13632	100k 1% 0.62W 0603
3285	4822 051 30683	68k 5% 0.062W
3286	4822 117 13632	100k 1% 0.62W 0603
3287	4822 051 30683	68k 5% 0.062W
3288	4822 051 30101	100Ω 5% 0.062W
3289	4822 051 30101	100Ω 5% 0.062W
3290	4822 052 10478	4Ω7 5% 0.33W
3291	4822 051 30561	560Ω 5% 0.062W
3292	4822 051 30103	10k 5% 0.062W
3293	4822 051 30471	470Ω 5% 0.062W
3294	4822 051 30103	10k 5% 0.062W
3295	4822 051 30471	470Ω 5% 0.062W
3296	4822 051 30103	10k 5% 0.062W
3297	4822 051 30103	10k 5% 0.062W
3298	4822 117 13632	100k 1% 0.62W 0603
3299	4822 051 30683	68k 5% 0.062W
3300	4822 052 10688	6Ω8 5% 0.33W
3302	4822 051 30101	100Ω 5% 0.062W
3303	4822 051 30101	100Ω 5% 0.062W
3304	4822 051 30101	100Ω 5% 0.062W
3307	4822 051 30102	1k 5% 0.062W
3308	4822 051 30102	1k 5% 0.062W
3309	4822 051 30333	33k 5% 0.062W
3310	4822 051 20332	3k3 5% 0.1W
3311	4822 051 30102	1k 5% 0.062W
3312	4822 117 13632	100k 1% 0.62W 0603
3315	4822 051 20182	1k8 5% 0.1W
3316	4822 051 10102	1k 2% 0.25W
3317	4822 051 30102	1k 5% 0.062W
3318	4822 051 30102	1k 5% 0.062W
3320	4822 051 30102	1k 5% 0.062W
3321	4822 051 30102	1k 5% 0.062W
3322	4822 051 30102	1k 5% 0.062W
3323	4822 051 20393	39k 5% 0.1W
3325	4822 051 30102	1k 5% 0.062W
3326	4822 051 30221	220Ω 5% 0.062W
3330	4822 051 30684	680k 5% 0.062W
3331	4822 117 12925	47k 1% 0.063W 0603
3332	4822 051 30183	18k 5% 0.062W
3340	4822 051 30123	12k 5% 0.062W
3341	4822 051 10102	1k 2% 0.25W
3342	4822 051 30103	10k 5% 0.062W
3343	4822 117 10837	100k 1% 0.1W
3344	4822 051 30103	10k 5% 0.062W
3350	4822 051 30474	470k 5% 0.062W
3351	4822 117 12891	220k 1%
3352	4822 051 30332	3k3 5% 0.062W
3353	4822 117 12903	1k8 1% 0.063W 0603
3369	4822 051 30103	10k 5% 0.062W
3370	4822 051 30103	10k 5% 0.062W
3400	4822 117 11454	820Ω 1% 0.1W
3401	4822 117 11454	820Ω 1% 0.1W
3402	4822 117 11454	820Ω 1% 0.1W
3404	4822 051 20479	47Ω 5% 0.1W
3405	4822 051 20479	47Ω 5% 0.1W
3406	4822 051 20479	47Ω 5% 0.1W
3407	4822 117 10361	680Ω 1% 0.1W
3408	4822 117 10361	680Ω 1% 0.1W
3409	4822 117 10361	680Ω 1% 0.1W
3420	4822 117 12925	47k 1% 0.063W 0603
3422	4822 117 11449	2k2 5% 0.1W 0805
3423	4822 051 20008	Jumper 0805
3426	4822 051 30333	33k 5% 0.062W
3427	4822 051 30154	150k 5% 0.062W
3428	4822 051 30222	2k2 5% 0.062W
3429	4822 051 30181	180Ω 5% 0.062W
3439	4822 117 10833	10k 1% 0.1W
3440	4822 051 20393	39k 5% 0.1W
3441	4822 117 10833	10k 1% 0.1W
3454	4822 051 20008	Jumper 0805
3460	4822 051 30103	10k 5% 0.062W
3461	4822 051 30223	22k 5% 0.062W
3521	4822 117 13632	100k 1% 0.62W 0603
3530	4822 051 30101	100Ω 5% 0.062W
3531	4822 051 30101	100Ω 5% 0.062W
3532	4822 116 83933	15k 1% 0.1W
3538	4822 052 10228	2Ω2 5% 0.33W
3545	4822 051 30471	470Ω 5% 0.062W
3546	4822 051 30471	470Ω 5% 0.062W
3551	4822 051 30271	270Ω 5% 0.062W
3554	4822 051 10102	1k 2% 0.25W
3556	4822 117 10833	10k 1% 0.1W
3557	4822 051 30479	47Ω 5% 0.062W
3558	4822 051 20105	1M 5% 0.1W
3565	4822 051 30101	100Ω 5% 0.062W
3566	4822 051 30101	100Ω 5% 0.062W
3567	4822 117 11373	100Ω 1% 0805
3568	4822 051 20471	470Ω 5% 0.1W
3569	4822 051 30479	47Ω 5% 0.062W
3570	3198 031 11010	4X100Ω 5% 0.63W network
3583	4822 051 30101	100Ω 5% 0.062W
3584	4822 051 30471	470Ω 5% 0.062W
3585	4822 051 30479	47Ω 5% 0.062W
3590	4822 117 11454	820Ω 1% 0.1W
3750	4822 052 10228	2Ω2 5% 0.33W
3751	4822 051 30223	22k 5% 0.062W
3752	4822 051 30223	22k 5% 0.062W
3753	4822 051 30682	6k8 5% 0.062W
3754	4822 051 30682	6k8 5% 0.062W
3755	4822 051 30101	100Ω 5% 0.062W
3756	4822 051 30101	100Ω 5% 0.062W
3762	4822 051 20472	4k7 5% 0.1W
3765	4822 051 30683	68k 5% 0.062W
3766	4822 051 30103	10k 5% 0.062W
3767	4822 051 30683	68k 5% 0.062W
3768	4822 051 30103	10k 5% 0.062W
3769	4822 117 11507	6k8 1% 0.1W
3770	4822 117 11507	6k8 1% 0.1W
3771	4822 116 83933	15k 1% 0.1W
3772	4822 116 83933	15k 1% 0.1W
3773	4822 051 20472	4k7 5% 0.1W
3781	4822 051 30561	560Ω 5% 0.062W
3783	4822 117 11373	100Ω 1% 0805
3784	4822 051 30008	Jumper 0603
3785	4822 051 30008	Jumper 0603
3796	4822 051 20121	120Ω 5% 0.1W
3797	4822 051 20121	120Ω 5% 0.1W
3798	4822 117 10834	47k 1% 0.1W
3799	4822 117 12925	47k 1% 0.063W 0603
3800	4822 051 30682	6k8 5% 0.062W
3801	4822 051 30103	10k 5% 0.062W
3802	4822 117 12891	220k 1%
3828	4822 051 30008	Jumper 0603
3829	4822 051 30008	Jumper 0603
3830	4822 051 20121	120Ω 5% 0.1W
3831	4822 051 20121	120Ω 5% 0.1W
3832	4822 051 10102	1k 2% 0.25W
3833	4822 051 30103	10k 5% 0.062W
3840	4822 051 30103	10k 5% 0.062W
3846	4822 117 12925	47k 1% 0.063W 0603
3847	4822 117 12925	47k 1% 0.063W 0603
3850	4822 051 20332	3k3 5% 0.1W
3851	4822 051 20332	3k3 5% 0.1W
3852	4822 051 30223	22k 5% 0.062W
3853	4822 051 30223	22k 5% 0.062W
3854	4822 117 10833	10k 1% 0.1W
3855	4822 117 10833	10k 1% 0.1W
3856	4822 117 10833	10k 1% 0.1W
3857	4822 117 10833	10k 1% 0.1W
3858	4822 117 10833	10k 1% 0.1W
3859	4822 117 10833	10k 1% 0.1W
3860	4822 117 10833	10k 1% 0.1W
3861	4822 117 10833	10k 1% 0.1W
3862	4822 117 11507	6k8 1% 0.1W
3864	4822 051 20223	22k 5% 0.1W
3865	4822 051 20223	22k 5% 0.1W
3866	4822 117 11373	100Ω 1% 0805
3867	4822 117 11373	100Ω 1% 0805
3877	4822 051 20332	3k3 5% 0.1W
3878	4822 051 20332	3k3 5% 0.1W
3879	4822 051 20332	3k3 5% 0.1W
3880	4822 051 20332	3k3 5% 0.1W
3881	4822 051 20332	3k3 5% 0.1W
3882	4822 051 20332	3k3 5% 0.1W
3883	4822 051 20822	8k2 5% 0.1W
3884	4822 117 11507	6k8 1% 0.1W
3885	4822 117 11148	56k 1% 0.1W
3886	4822 051 20393	39k 5% 0.1W
3887	4822 117 11373	100Ω 1% 0805
3888	4822 051 20562	5k6 5% 0.1W 0805

3895	4822 051 30103	10k 5% 0.062W
3899	4822 051 20008	Jumper 0805
4xxx	4822 051 10008	Jumper 1206
4xxx	4822 051 20008	Jumper 0805

5002	4822 157 11775	6.8µH 5%
5101	4822 157 11775	6.8µH 5%
5102	4822 157 71303	0.39µH 10%
5103	4822 157 11776	Coil var. 40.4MHz
5106	4822 157 10977	4.7µH 10%
5108	2422 549 44811	Coil var.78MHz
5301	4822 157 11876	6.8µH 10% 0805
5302	4822 157 11876	6.8µH 10% 0805
5305	4822 051 20008	Jumper 0805
5306	4822 051 20008	Jumper 0805
5307	4822 051 20008	Jumper 0805
5501	4822 157 11775	6.8µH 5% 5X3
5502	4822 157 11775	6.8µH 5% 5X3
5540	4822 157 71304	1µH
5559	4822 157 11775	6.8µH 5% 5X3
5560	4822 157 11775	6.8µH 5% 5X3
5562	4822 157 11775	6.8µH 5% 5X3
5751	4822 157 11775	6.8µH 5% 5X3
5752	4822 157 11775	6.8µH 5% 5X3
5753	4822 157 11775	6.8µH 5% 5X3
5757	4822 157 11876	6.8µH 10% 0805
5759	4822 157 70503	4.7µH

6001	4822 130 11422	PLVA2650A
6002	4822 130 11422	PLVA2650A
6003	4822 130 11422	PLVA2650A
6004	4822 130 11422	PLVA2650A
6006	4822 130 11422	PLVA2650A
6008	4822 130 11422	PLVA2650A
6009	4822 130 11422	PLVA2650A
6012	4822 130 11422	PLVA2650A
6013	4822 130 11422	PLVA2650A
6017	4822 130 11422	PLVA2650A
6019	4822 130 11422	PLVA2650A
6021	4822 130 11422	PLVA2650A
6023	4822 130 11422	PLVA2650A
6025	4822 130 11423	PLVA2656A
6026	4822 130 11423	PLVA2656A
6037	9322 129 34685	BZM55-C3V9
6039	4822 130 83757	MCL4148
6040	9322 129 37685	BZM55-C5V6
6101	9322 149 10685	BZM55-C33
6103	4822 130 11525	1SS356
6104	4822 130 11525	1SS356
6106	4822 130 83757	MCL4148
6107	4822 130 83757	MCL4148
6200	9322 129 40685	BZM55-C10
6201	9322 129 38685	BZM55-C6V8
6202	9322 129 40685	BZM55-C10
6203	9322 129 40685	BZM55-C10
6204	9322 129 38685	BZM55-C6V8
6205	9322 129 40685	BZM55-C10
6206	9322 129 40685	BZM55-C10
6207	9322 129 38685	BZM55-C6V8
6208	9322 129 40685	BZM55-C10
6209	9322 129 40685	BZM55-C10
6210	9322 129 38685	BZM55-C6V8
6211	9322 129 38685	BZM55-C6V8
6212	9322 129 38685	BZM55-C6V8
6213	9322 129 38685	BZM55-C6V8
6214	9322 129 40685	BZM55-C10
6215	9322 129 40685	BZM55-C10
6216	9322 129 40685	BZM55-C10
6217	9322 129 40685	BZM55-C10
6218	9340 548 61115	PDZ12B
6219	9322 129 38685	BZM55-C6V8
6220	9322 129 40685	BZM55-C10
6221	9322 129 40685	BZM55-C10
6222	9322 129 38685	BZM55-C6V8
6223	9322 129 40685	BZM55-C10
6224	9322 129 40685	BZM55-C10
6225	9322 129 38685	BZM55-C6V8
6226	9322 129 38685	BZM55-C6V8
6227	9322 129 38685	BZM55-C6V8
6228	9322 129 38685	BZM55-C6V8
6229	9322 129 40685	BZM55-C10
6230	9322 129 40685	BZM55-C10
6231	9322 129 40685	BZM55-C10
6232	9322 129 40685	BZM55-C10
6233	9322 129 38685	BZM55-C6V8
6238	4822 130 11528	1PS76SB10
6240	9322 129 40685	BZM55-C10
6241	9322 129 40685	BZM55-C10
6242	9322 129 40685	BZM55-C10
6243	9322 129 40685	BZM55-C10
6244	9322 129 38685	BZM55-C6V8
6250	4822 130 11528	1PS76SB10
6340	4822 130 83757	MCL4148
6341	4822 130 11594	BZX284-C47
6344	4822 130 83757	MCL4148
6350	4822 130 82346	BZV55-C27
6420	9322 129 37685	BZM55-C5V6
6422	4822 130 83757	MCL4148
6424	4822 130 83757	MCL4148
6429	9322 129 37685	BZM55-C5V6
6430	4822 130 83757	MCL4148
6431	4822 130 83757	MCL4148
6750	4822 051 20008	Jumper 0805
6751	9322 129 40685	BZM55-C10
6752	9322 129 40685	BZM55-C10
6755	9322 129 40685	BZM55-C10
6756	9322 129 40685	BZM55-C10
6757	4822 051 20008	Jumper 0805
6759	4822 130 83757	MCL4148

7001	9322 157 20668	MSM51V18165F-60J
7002	4822 816 11247	M27V160-100B1
7003	9352 629 88557	SAA5801H/011
7006	4822 130 60373	BC856B
7007	4822 130 60511	BC847B
7008	4822 209 16977	M24C32-WBN6
7009	4822 209 16978	LF33CV
7010	4822 209 73852	PMBT2369
7011	4822 130 11155	PDTC114ET
7012	3198 010 44010	PDTA114ET
7013	9322 149 03668	M29W400BT-90M1
7014	4822 130 60511	BC847B
7015	4822 130 60373	BC856B
7016	4822 130 60511	BC847B
7019	4822 130 10255	MUN2213
7103	4822 130 60511	BC847B
7104	4822 130 60511	BC847B
7107	4822 130 60373	BC856B
7111	4822 130 60511	BC847B
7112	4822 130 60511	BC847B
7113	4822 209 72042	L78L05ACZ
7200	4822 130 40959	BC547B
7201	4822 130 40959	BC547B
7203	4822 130 44568	BC557B
7204	4822 130 60511	BC847B
7205	4822 130 60511	BC847B
7206	4822 130 60511	BC847B
7207	4822 130 60373	BC856B
7208	9322 105 08668	TEA6415CD
7216	4822 130 60511	BC847B
7300	9352 625 23518	TDA9330H/N2
7341	4822 130 60373	BC856B
7351	4822 130 60373	BC856B
7417	4822 130 10255	MUN2213
7418	4822 130 60373	BC856B
7419	4822 130 60373	BC856B
7420	4822 130 60373	BC856B
7424	4822 130 60373	BC856B
7501	9352 625 24518	TDA9321H/N2
7502	4822 130 60511	BC847B
7555	4822 130 60373	BC856B
7560	4822 209 12998	SAA4961/V3/S1
7561	4822 130 60511	BC847B
7575	4822 130 60511	BC847B
7701	4822 130 60511	BC847B
7751	9322 148 35668	MSP3410D-PS-C5
7752	5322 209 11102	HEF4052BT
7753	5322 209 11102	HEF4052BT
7757	4822 209 31378	NJM4556MB
7773	4822 130 60511	BC847B
7774	4822 130 60511	BC847B
7777	9322 116 87668	TEA6422D

Feature Box [L]

Various

0025	3104 301 23824	FBX-shield top
0026	3104 301 23834	FBX-shield botom
0361	2422 025 15389	9P male
0362	2422 025 15389	9P male
1701	4822 242 10685	Crystal 12MHz

2701	4822 126 11663	12pF
2704	4822 126 11663	12pF
2707	4822 126 11663	12pF
2709	4822 126 14305	100nF 10% 16V 0603
2710	4822 124 80791	470µF 16V 20%
2712	4822 126 13881	470pF 5% 50V
2713	4822 122 33761	22pF 5% 50V
2714	4822 122 33761	22pF 5% 50V
2718	4822 122 33752	15pF 5% 50V
2719	4822 122 33752	15pF 5% 50V
2720	4822 122 33752	15pF 5% 50V
2721	4822 122 31765	100pF 2% 63V
2722	4822 122 31765	100pF 2% 63V
2723	4822 126 14225	56pF 5% 50V 0603
2724	4822 126 14225	56pF 5% 50V 0603
2725	4822 124 40248	10µF 20% 63V
2726	4822 126 14305	100nF 10% 16V 0603
2727	4822 124 40255	100µF 20% 63V
2728	4822 124 40248	10µF 20% 63V
2729	4822 126 14305	100nF 10% 16V 0603
2730	4822 124 40255	100µF 20% 63V
2740	4822 126 14494	22nF 10% 25V 0603
2741	4822 126 14494	22nF 10% 25V 0603
2742	4822 126 14494	22nF 10% 25V 0603
2745	4822 126 14305	100nF 10% 16V 0603
2746	4822 126 14305	100nF 10% 16V 0603
2747	4822 124 40769	4.7µF 20% 100V
2748	4822 126 14305	100nF 10% 16V 0603
2749	4822 124 40255	100µF 20% 63V
2750	4822 126 14305	100nF 10% 16V 0603
2751	4822 126 14305	100nF 10% 16V 0603
2752	4822 126 14305	100nF 10% 16V 0603
2753	4822 126 14305	100nF 10% 16V 0603
2754	4822 124 40769	4.7µF 20% 100V
2755	4822 126 14305	100nF 10% 16V 0603
2756	4822 126 14305	100nF 10% 16V 0603
2757	4822 126 14494	22nF 10% 25V 0603
2758	4822 126 14507	18pF 5% 50V 0603
2759	4822 126 14507	18pF 5% 50V 0603
2760	4822 126 14305	100nF 10% 16V 0603
2761	4822 126 14305	100nF 10% 16V 0603
2762	4822 126 14305	100nF 10% 16V 0603
2763	4822 126 14305	100nF 10% 16V 0603
2764	4822 126 14305	100nF 10% 16V 0603
2765	4822 126 14305	100nF 10% 16V 0603
2766	4822 126 14305	100nF 10% 16V 0603
2767	4822 126 14305	100nF 10% 16V 0603
2769	4822 126 14305	100nF 10% 16V 0603
2773	4822 126 14305	100nF 10% 16V 0603
2775	4822 126 14305	100nF 10% 16V 0603
2777	4822 126 14305	100nF 10% 16V 0603
2779	4822 126 14305	100nF 10% 16V 0603
2781	4822 126 14305	100nF 10% 16V 0603
2782	4822 126 14305	100nF 10% 16V 0603
2783	4822 126 14305	100nF 10% 16V 0603
2784	4822 126 14305	100nF 10% 16V 0603
2785	4822 126 14305	100nF 10% 16V 0603
2786	4822 126 14305	100nF 10% 16V 0603
2787	4822 126 14305	100nF 10% 16V 0603
2788	4822 126 14305	100nF 10% 16V 0603
2789	4822 126 14305	100nF 10% 16V 0603
2790	4822 126 14305	100nF 10% 16V 0603
2791	4822 126 14305	100nF 10% 16V 0603
2792	4822 124 40248	10µF 20% 63V
2793	4822 126 14305	100nF 10% 16V 0603
2794	4822 124 40248	10µF 20% 63V
2795	4822 126 14305	100nF 10% 16V 0603
2796	4822 126 14305	100nF 10% 16V 0603
2797	4822 126 14305	100nF 10% 16V 0603
2798	4822 126 14305	100nF 10% 16V 0603
2799	4822 126 14305	100nF 10% 16V 0603
2800	4822 126 14305	100nF 10% 16V 0603
2801	4822 126 14305	100nF 10% 16V 0603
2802	4822 126 14305	100nF 10% 16V 0603
2803	4822 126 14305	100nF 10% 16V 0603
2804	4822 126 14305	100nF 10% 16V 0603
2805	4822 126 14305	100nF 10% 16V 0603
2806	4822 124 40255	100µF 20% 63V
2807	4822 126 14305	100nF 10% 16V 0603
2808	4822 124 40248	10µF 20% 63V
2809	4822 126 14305	100nF 10% 16V 0603
2813	4822 126 14305	100nF 10% 16V 0603
2817	4822 126 14305	100nF 10% 16V 0603
2822	4822 126 14305	100nF 10% 16V 0603
2825	4822 126 14305	100nF 10% 16V 0603
2826	4822 126 14305	100nF 10% 16V 0603
2829	4822 126 14305	100nF 10% 16V 0603
2832	4822 126 14305	100nF 10% 16V 0603
2833	4822 126 14305	100nF 10% 16V 0603
2835	4822 126 14305	100nF 10% 16V 0603
2838	4822 126 14305	100nF 10% 16V 0603
2845	4822 126 14305	100nF 10% 16V 0603
2847	4822 126 14305	100nF 10% 16V 0603
2848	4822 126 14305	100nF 10% 16V 0603
2849	4822 126 14305	100nF 10% 16V 0603
2850	4822 126 14305	100nF 10% 16V 0603

2851	4822 126 14305	100nF 10% 16V 0603
2852	4822 126 14305	100nF 10% 16V 0603
2853	4822 126 14305	100nF 10% 16V 0603
2854	4822 126 14305	100nF 10% 16V 0603
2855	4822 126 14305	100nF 10% 16V 0603
2856	4822 126 14305	100nF 10% 16V 0603
2858	4822 126 14305	100nF 10% 16V 0603
2859	4822 126 14305	100nF 10% 16V 0603
2860	4822 126 14305	100nF 10% 16V 0603
2861	4822 126 14305	100nF 10% 16V 0603
2862	4822 126 14305	100nF 10% 16V 0603
2863	4822 126 14305	100nF 10% 16V 0603
2864	4822 126 14305	100nF 10% 16V 0603
2865	4822 126 14305	100nF 10% 16V 0603
2866	4822 126 14305	100nF 10% 16V 0603
2867	4822 126 14305	100nF 10% 16V 0603
2868	4822 124 40248	10µF 20% 63V
2869	4822 126 14305	100nF 10% 16V 0603
2870	4822 124 40255	100µF 20% 63V
2871	4822 126 14305	100nF 10% 16V 0603
2872	4822 126 14305	100nF 10% 16V 0603
2885	4822 126 14305	100nF 10% 16V 0603
2888	4822 126 14305	100nF 10% 16V 0603
2889	4822 126 14305	100nF 10% 16V 0603
2890	4822 126 14305	100nF 10% 16V 0603
2891	4822 126 14305	100nF 10% 16V 0603
2892	4822 126 14305	100nF 10% 16V 0603
2893	4822 126 14305	100nF 10% 16V 0603
2894	4822 126 14305	100nF 10% 16V 0603
2895	4822 126 14305	100nF 10% 16V 0603
2896	4822 126 14305	100nF 10% 16V 0603
2897	4822 124 40248	10µF 20% 63V
2898	4822 126 14305	100nF 10% 16V 0603
2899	4822 126 14305	100nF 10% 16V 0603
2901	4822 126 14305	100nF 10% 16V 0603
2902	4822 126 14305	100nF 10% 16V 0603
2903	4822 126 14305	100nF 10% 16V 0603
2904	4822 126 14305	100nF 10% 16V 0603
2905	4822 126 14305	100nF 10% 16V 0603
2906	4822 126 14305	100nF 10% 16V 0603
2907	4822 126 14305	100nF 10% 16V 0603
2908	4822 126 14305	100nF 10% 16V 0603
2909	4822 124 40255	100µF 20% 63V
2910	4822 126 11669	27pF
2911	4822 126 14223	2.2pF +-0.25pF 50V 0603
2912	4822 126 11663	12pF
2913	4822 126 11663	12pF
2914	4822 126 11669	27pF
2915	4822 126 11663	12pF
2916	4822 126 11663	12pF
2917	4822 126 14223	2.2pF +-0.25pF 50V 0603
2918	4822 126 14223	2.2pF +-0.25pF 50V 0603
2920	4822 126 11669	27pF
2921	4822 126 11663	12pF
2922	4822 126 11663	12pF
2923	4822 126 14305	100nF 10% 16V 0603
2924	4822 126 14305	100nF 10% 16V 0603
2925	4822 126 14305	100nF 10% 16V 0603
2926	4822 126 14305	100nF 10% 16V 0603
2927	4822 126 14305	100nF 10% 16V 0603
2928	4822 126 14305	100nF 10% 16V 0603
2929	4822 126 13956	68pF 5% 63V 0603

3700	4822 051 30008	Jumper 0603
3701	4822 051 30008	Jumper 0603
3702	4822 051 30008	Jumper 0603
3703	4822 051 30221	220Ω 5% 0.062W
3704	4822 051 30221	220Ω 5% 0.062W
3705	4822 051 30221	220Ω 5% 0.062W
3709	4822 051 30101	100Ω 5% 0.062W
3710	4822 051 30101	100Ω 5% 0.062W
3713	4822 051 30181	180Ω 5% 0.062W
3714	4822 051 30181	180Ω 5% 0.062W
3715	4822 051 30181	180Ω 5% 0.062W
3716	4822 117 13632	100k 1% 0.62W 0603
3717	4822 117 13632	100k 1% 0.62W 0603
3718	4822 117 13632	100k 1% 0.62W 0603
3719	4822 051 30008	Jumper 0603
3720	4822 051 30008	Jumper 0603
3721	4822 051 30008	Jumper 0603
3725	4822 051 30332	3k3 5% 0.062W
3726	4822 117 11817	1k2 1% 1/16W
3727	4822 051 30151	150Ω 5% 0.062W
3728	4822 051 30151	150Ω 5% 0.062W
3729	4822 051 30689	68Ω 5% 0.063W 0603
3730	4822 051 30689	68Ω 5% 0.063W 0603
3731	4822 051 30472	4k7 5% 0.062W
3732	4822 051 30472	4k7 5% 0.062W
3733	4822 051 30472	4k7 5% 0.062W
3735	4822 051 30472	4k7 5% 0.062W
3740	4822 051 30008	Jumper 0603
3741	4822 051 30008	Jumper 0603
3742	4822 051 30008	Jumper 0603
3752	4822 117 12917	1Ω 5% 0.062W 0603
3753	4822 117 12917	1Ω 5% 0.062W 0603
3758	4822 051 30472	4k7 5% 0.062W
3759	4822 051 30221	220Ω 5% 0.062W
3760	4822 051 30105	1M 5% 0.062W
3762	4822 051 30339	33Ω 5% 0.062W
3763	4822 117 12139	22Ω 5% 0.062W
3764	4822 051 30109	10Ω 5% 0.062W
3773	4822 117 12925	47k 1% 0.063W 0603
3774	4822 117 12925	47k 1% 0.063W 0603
3781	4822 117 12925	47k 1% 0.063W 0603
3782	4822 117 12925	47k 1% 0.063W 0603
3783	4822 117 12925	47k 1% 0.063W 0603
3784	4822 051 30102	1k 5% 0.062W
3787	4822 051 30154	150k 5% 0.062W
3788	4822 117 12891	220k 1%
3789	4822 051 30472	4k7 5% 0.062W
3790	4822 051 30101	100Ω 5% 0.062W
3791	4822 051 30101	100Ω 5% 0.062W
3792	4822 051 30102	1k 5% 0.062W
3793	4822 051 30392	3k9 5% 0.063W 0603
3794	4822 117 12903	1k8 1% 0.063W 0603
3795	4822 051 30183	18k 5% 0.062W
3796	4822 051 30123	12k 5% 0.062W
3797	4822 051 30153	15k 5% 0.062W
3798	4822 051 30183	18k 5% 0.062W
3803	5322 117 13058	150Ω 1% 0.063W 0603
3804	5322 117 13058	150Ω 1% 0.063W 0603
3805	4822 051 30102	1k 5% 0.062W
3806	4822 051 30102	1k 5% 0.062W
3811	5322 117 13058	150Ω 1% 0.063W 0603
3812	5322 117 13058	150Ω 1% 0.063W 0603
3813	5322 117 13058	150Ω 1% 0.063W 0603
3820	5322 117 13058	150Ω 1% 0.063W 0603
3826	4822 051 30759	75Ω 5% 0.062W
3827	4822 051 30759	75Ω 5% 0.062W
3828	4822 051 30471	470Ω 5% 0.062W
3829	4822 051 30391	390Ω 5% 0.062W
3830	4822 051 30271	270Ω 5% 0.062W
3831	4822 051 30681	680Ω 5% 0.062W
3832	4822 117 13577	330Ω 1% 1.25W 0805
3833	4822 051 30759	75Ω 5% 0.062W
3834	4822 051 30759	75Ω 5% 0.062W
3835	4822 051 30759	75Ω 5% 0.062W
3836	4822 051 30759	75Ω 5% 0.062W
3837	4822 051 30471	470Ω 5% 0.062W
3838	4822 051 30391	390Ω 5% 0.062W
3839	4822 051 30471	470Ω 5% 0.062W
3840	4822 051 30102	1k 5% 0.062W
3841	4822 117 13577	330Ω 1% 1.25W 0805
3842	4822 051 30759	75Ω 5% 0.062W
3843	4822 051 30759	75Ω 5% 0.062W
3844	4822 051 30759	75Ω 5% 0.062W
3845	4822 051 30759	75Ω 5% 0.062W
3846	4822 051 30471	470Ω 5% 0.062W
3847	4822 051 30391	390Ω 5% 0.062W
3848	4822 051 30391	390Ω 5% 0.062W
3849	4822 051 30331	330Ω 5% 0.062W
3850	4822 117 13577	330Ω 1% 1.25W 0805
3851	4822 051 30759	75Ω 5% 0.062W
3852	4822 051 30759	75Ω 5% 0.062W
3853	4822 117 12902	8k2 1% 0.063W 0603
3854	4822 051 30392	3k9 5% 0.063W 0603
3855	4822 051 30102	1k 5% 0.062W
3856	4822 051 30102	1k 5% 0.062W
3857	4822 052 10109	10Ω 5% 0.33W
3858	4822 051 30222	2k2 5% 0.062W
3859	4822 051 30222	2k2 5% 0.062W
3860	4822 051 30102	1k 5% 0.062W
3861	4822 051 30332	3k3 5% 0.062W
3862	4822 051 30103	10k 5% 0.062W
3863	4822 051 30681	680Ω 5% 0.062W
3864	4822 117 12925	47k 1% 0.063W 0603
3865	4822 051 30472	4k7 5% 0.062W
3870	4822 051 30109	10Ω 5% 0.062W
3871	4822 117 12971	15Ω 5% 0.62W 0603
3872	4822 117 12925	47k 1% 0.063W 0603
3999	4822 051 30102	1k 5% 0.062W

5700	4822 157 71304	1µH 10%
5701	4822 157 71304	1µH 10%
5702	4822 157 71304	1µH 10%
5703	4822 157 11716	Bead 100MHz 30Ω
5704	4822 157 11716	Bead 100MHz 30Ω
5705	4822 157 11716	Bead 100MHz 30Ω
5706	4822 157 11716	Bead 100MHz 30Ω
5707	4822 051 20008	Jumper 0805
5708	4822 051 20008	Jumper 0805
5709	4822 051 20008	Jumper 0805
5710	4822 156 21729	Bead 100MHz 1k
5711	4822 156 21729	Bead 100MHz 1k
5712	4822 156 21729	Bead 100MHz 1k
5713	4822 157 11716	Bead 100MHz 30Ω
5714	4822 157 71206	Bead 100MHz 600Ω
5715	4822 156 21729	Bead 100MHz 1k
5716	4822 156 21729	Bead 100MHz 1k
5717	4822 156 21729	Bead 100MHz 1k
5718	4822 157 11716	Bead 100MHz 30Ω
5719	4822 156 21729	Bead 100MHz 1k
5723	4822 157 11716	Bead 100MHz 30Ω
5724	4822 157 71206	Bead 100MHz 600Ω
5725	4822 157 71206	Bead 100MHz 600Ω
5726	4822 156 21729	Bead 100MHz 1k
5727	4822 156 21729	Bead 100MHz 1k
5728	4822 157 71206	Bead 100MHz 600Ω
5729	4822 156 21729	Bead 100MHz 1k
5730	4822 157 11716	Bead 100MHz 30Ω
5731	4822 156 21729	Bead 100MHz 1k
5732	4822 157 10586	2.2µH 10% 0805
5733	4822 157 10586	2.2µH 10% 0805
5734	4822 157 10586	2.2µH 10% 0805
5736	4822 156 21729	Bead 100MHz 1k

7703	4822 209 73852	PMBT2369
7704	4822 209 73852	PMBT2369
7705	4822 209 17398	LD1117DT33
7706	9322 160 50668	LD1117DT25
7711	3104 317 43531	Software RE1F2_04
7712	5322 209 60424	74HC573D
7713	9352 688 09557	SAA4978H/V204
7714	9965 000 02179	MS81V04160-25TB
7717	9322 146 01668	MSM54V12222A-23JS
7718	9352 695 58557	SAA4993H/V1
7719	9322 146 01668	MSM54V12222A-23JS
7720	4822 209 17398	LD1117DT33
7722	9965 000 02179	MS81V04160-25TB
7723	9965 000 02179	MS81V04160-25TB
7724	9322 174 33702	T8F24EF EAGLE
7725	9322 160 50668	LD1117DT25
7727	4822 130 60511	BC847B
7728	4822 130 60511	BC847B
7729	4822 130 60511	BC847B
7730	5322 130 42718	BFS20
7731	5322 130 42718	BFS20
7732	5322 130 42718	BFS20
7733	5322 130 42718	BFS20
7734	5322 130 42718	BFS20
7735	5322 130 42718	BFS20
7736	4822 130 60511	BC847B
7739	9322 170 14668	LF15ABDT
7740	4822 209 73852	PMBT2369
7741	4822 209 73852	PMBT2369

Full Dual Screen Panel [M]

Various

0344	4822 267 10963	3P white
0346	4822 267 10967	3P black
0347	4822 267 10969	3P red
0348	4822 267 11043	3P yellow
0351	2422 025 15391	11P male
0352	2422 025 15391	11P male
1102	3139 147 18841	Tuner UV1316/A P X-3
1105	4822 242 10688	Filter OFWK9456M
1107	4822 242 72211	Filter 5.5 MHz
1109	4822 242 81436	Filter OFWK3953M
1198	3104 301 08351	Cable phono-phono 120mm
1525	4822 242 10695	Crystal 4.433 619 MHz
1528	4822 242 10697	Crystal 3.579 545 MHz
1601	4822 242 10314	Filter 5.5 MHz
1602	4822 242 81265	Filter 6.0
1603	4822 242 81299	Filter 6.5
1800	2422 086 10581	Prot dev 65V 400mA
8347	3104 301 09062	Cable 3P 220mm red
8348	3104 301 08493	Cable 3P 140mm yellow

2101	4822 124 80195	470µF 20% 10V
2102	4822 126 13473	220nF 80-20% 50V
2104	4822 122 33177	10nF 20% 50V
2105	4822 122 33177	10nF 20% 50V
2106	4822 122 33575	220pF 5% 63V
2107	4822 126 13956	68pF 5% 63V 0603
2108	5322 126 10225	1P5 5%
2109	4822 124 22652	2.2µF 20% 50V
2110	4822 124 21913	1µF 20% 63V

2111	4822 126 14585	100nF 10% 50V
2112	4822 122 33891	3.3nF 10% 63V
2116	4822 124 12095	100µF 20% 16V
2117	4822 126 14076	220nF 20-80% 25V
2118	4822 126 14487	8.2pF 0.5% 50V 0603
2119	5322 122 31863	330pF 5% 63V
2120	4822 126 14076	220nF 20-80% 25V
2140	4822 126 14491	2.2µF 10V
2501	4822 126 14305	100nF 10% 16V 0603
2504	4822 126 14305	100nF 10% 16V 0603
2520	4822 126 14305	100nF 10% 16V 0603
2521	4822 126 14305	100nF 10% 16V 0603
2522	5322 126 11579	3.3nF 10% 63V
2525	4822 126 14507	18pF 5% 50V 0603
2528	4822 122 33752	15pF 5% 50V
2532	4822 126 14043	1µF 20% 16V
2534	5322 126 10223	4.7nF 10% 63V
2536	4822 126 14491	2.2µF 10V
2537	4822 126 14585	100nF 10% 50V
2538	4822 124 80151	47µF 16V
2539	4822 126 14585	100nF 10% 50V
2540	4822 124 80151	47µF 16V
2541	4822 126 14585	100nF 10% 50V
2545	4822 126 14305	100nF 10% 16V 0603
2600	4822 126 14491	2.2µF 10V
2601	4822 126 14585	100nF 10% 50V
2603	4822 126 14491	2.2µF 10V
2605	4822 126 14585	100nF 10% 50V
2620	4822 122 32927	220nF 20% 50V
2621	4822 126 14585	100nF 10% 50V
2622	4822 122 32927	220nF 20% 50V
2623	4822 122 32927	220nF 20% 50V
2624	5322 124 41945	22µF 20% 35V
2625	4822 122 32927	220nF 20% 50V
2626	4822 126 14585	100nF 10% 50V
2627	5322 122 32654	22nF 10% 63V
2628	4822 126 14585	100nF 10% 50V
2629	4822 122 32927	220nF 20% 50V
2630	4822 124 80408	4.7µF 20% 50V
2632	4822 122 32927	220nF 20% 50V
2633	4822 126 14585	100nF 10% 50V
2638	4822 126 14491	2.2µF 10V
2639	4822 124 23002	10µF 16V
2640	4822 124 23002	10µF 16V
2650	4822 124 80195	470µF 20% 10V
2748	4822 126 14305	100nF 10% 16V 0603
2749	4822 126 14305	100nF 10% 16V 0603
2752	4822 126 14305	100nF 10% 16V 0603
2753	4822 126 14305	100nF 10% 16V 0603
2754	4822 126 14305	100nF 10% 16V 0603
2755	4822 126 14305	100nF 10% 16V 0603
2756	4822 126 14305	100nF 10% 16V 0603
2757	4822 126 14305	100nF 10% 16V 0603
2758	3198 017 41050	1µF 10V 0603
2759	4822 126 14305	100nF 10% 16V 0603
2761	4822 126 14305	100nF 10% 16V 0603
2762	4822 126 14305	100nF 10% 16V 0603
2763	4822 126 14305	100nF 10% 16V 0603
2766	4822 126 14305	100nF 10% 16V 0603
2767	4822 126 14305	100nF 10% 16V 0603
2768	4822 126 14305	100nF 10% 16V 0603
2769	4822 126 14305	100nF 10% 16V 0603
2770	4822 126 14305	100nF 10% 16V 0603
2771	4822 126 14305	100nF 10% 16V 0603
2772	4822 126 14305	100nF 10% 16V 0603
2773	4822 126 14305	100nF 10% 16V 0603
2774	4822 126 14305	100nF 10% 16V 0603
2775	4822 126 14305	100nF 10% 16V 0603
2776	4822 126 14305	100nF 10% 16V 0603
2777	4822 126 14305	100nF 10% 16V 0603
2778	4822 126 14305	100nF 10% 16V 0603
2779	4822 126 14305	100nF 10% 16V 0603
2780	4822 126 14305	100nF 10% 16V 0603
2781	4822 126 14305	100nF 10% 16V 0603
2782	4822 126 14305	100nF 10% 16V 0603
2783	4822 124 23002	10µF 16V
2784	4822 124 23002	10µF 16V
2785	4822 122 33177	10nF 20% 50V
2786	4822 122 33177	10nF 20% 50V
2787	4822 126 14305	100nF 10% 16V 0603
2788	5322 122 32531	100pF 5% 50V
2789	4822 126 13692	47pF 1% 63V
2791	5322 122 32658	22pF 5% 50V
2794	5322 122 32658	22pF 5% 50V
2795	4822 124 12095	100µF 20% 16V
2796	4822 124 12095	100µF 20% 16V
2797	4822 124 12095	100µF 20% 16V
2800	4822 126 13879	220nF 20% 16V
2801	4822 126 13879	220nF 20% 16V
2802	4822 126 13879	220nF 20% 16V
2803	4822 126 13879	220nF 20% 16V
2804	4822 126 13879	220nF 20% 16V
2805	4822 126 13879	220nF 20% 16V
2807	4822 126 14585	100nF 10% 50V
2840	4822 126 14585	100nF 10% 50V
2860	4822 126 14305	100nF 10% 16V 0603
2880	5322 124 41945	22µF 20% 35V
2881	4822 124 40433	47µF 20% 25V
2882	4822 124 11912	220µF 20% 6.3V
2883	4822 124 12095	100µF 20% 16V
2884	4822 126 14491	2.2µF 10V
2890	4822 126 14585	100nF 10% 50V
2891	4822 126 14585	100nF 10% 50V
2922	4822 126 14241	330pF 50V 0603
2923	4822 126 14305	100nF 10% 16V 0603
2932	4822 122 33753	150pF 5% 50V
2934	4822 126 14305	100nF 10% 16V 0603
2942	4822 122 33753	150pF 5% 50V
2944	4822 126 14305	100nF 10% 16V 0603
2972	4822 126 14241	330pF 50V 0603
2973	4822 126 14305	100nF 10% 16V 0603
2982	4822 122 33753	150pF 5% 50V
2983	4822 126 14305	100nF 10% 16V 0603
2992	4822 122 33753	150pF 5% 50V
2993	4822 126 14305	100nF 10% 16V 0603

3100	4822 051 20273	27k 5% 0.1W
3101	4822 051 20273	27k 5% 0.1W
3102	4822 051 30562	5k6 5% 0.063W 0603
3103	4822 051 20008	Jumper 0805
3104	4822 051 20008	Jumper 0805
3106	4822 117 11927	75Ω 1% 0.1W
3110	4822 117 11449	2k2 5% 0.1W 0805
3111	4822 117 11449	2k2 5% 0.1W 0805
3112	4822 051 20472	4k7 5% 0.1W
3114	4822 051 20472	4k7 5% 0.1W
3118	4822 051 20391	390Ω 5% 0.1W
3119	4822 117 12521	68Ω 1% 0.1W
3124	4822 051 30101	100Ω 5% 0.062W
3133	4822 117 12955	2k7 1% 0.1W 0805
3135	4822 051 20472	4k7 5% 0.1W
3136	4822 117 11503	220Ω 1% 0.1W
3137	4822 051 10102	1k 2% 0.25W
3138	4822 117 11448	180Ω 1% 0.1W
3139	4822 117 11139	1k5 1% 0.1W
3140	4822 051 30393	39k 5% 0.062W
3142	4822 051 10102	1k 2% 0.25W
3143	4822 051 10102	1k 2% 0.25W
3145	4822 051 20121	120Ω 5% 0.1W
3146	4822 051 20223	22k 5% 0.1W
3151	4822 052 10128	1Ω2 5% 0.33W
3501	4822 051 30101	100Ω 5% 0.062W
3504	4822 051 30101	100Ω 5% 0.062W
3521	4822 117 13632	100k 1% 0.62W 0603
3530	4822 051 30101	100Ω 5% 0.062W
3531	4822 051 30101	100Ω 5% 0.062W
3532	4822 116 83933	15k 1% 0.1W
3538	4822 052 10228	2Ω2 5% 0.33W
3545	4822 051 30471	470Ω 5% 0.062W
3546	4822 051 30471	470Ω 5% 0.062W
3550	4822 051 20471	470Ω 5% 0.1W
3601	4822 117 10361	680Ω 1% 0.1W
3602	4822 051 20471	470Ω 5% 0.1W
3603	4822 051 20471	470Ω 5% 0.1W
3604	4822 051 20273	27k 5% 0.1W
3605	4822 051 20391	390Ω 5% 0.1W
3620	4822 117 11507	6k8 1% 0.1W
3621	4822 117 11507	6k8 1% 0.1W
3622	4822 117 11373	100Ω 1% 0805
3623	4822 117 10361	680Ω 1% 0.1W
3624	4822 117 11454	820Ω 1% 0.1W
3625	4822 117 11454	820Ω 1% 0.1W
3630	4822 051 20273	27k 5% 0.1W
3634	4822 051 20273	27k 5% 0.1W
3635	4822 051 20822	8k2 5% 0.1W
3636	4822 051 20822	8k2 5% 0.1W
3642	4822 051 20562	5k6 5% 0.1W 0805
3650	4822 052 10688	6Ω8 5% 0.33W
3747	4822 051 20223	22k 5% 0.1W
3748	4822 051 20223	22k 5% 0.1W
3750	4822 051 30393	39k 5% 0.062W
3751	4822 051 30393	39k 5% 0.062W
3752	4822 051 30103	10k 5% 0.062W
3756	4822 051 30101	100Ω 5% 0.062W
3757	4822 051 30101	100Ω 5% 0.062W
3765	4822 051 20683	68k 5% 0.1W
3766	4822 117 11139	1k5 1% 0.1W
3767	4822 051 20683	68k 5% 0.1W
3768	4822 117 11139	1k5 1% 0.1W
3780	4822 051 30222	2k2 5% 0.062W
3781	4822 117 13632	100k 1% 0.62W 0603
3782	4822 051 30222	2k2 5% 0.062W
3783	4822 117 13632	100k 1% 0.62W 0603
3796	4822 051 20121	120Ω 5% 0.1W
3797	4822 051 20121	120Ω 5% 0.1W
3798	4822 051 20121	120Ω 5% 0.1W
3799	4822 051 20121	120Ω 5% 0.1W
3842	4822 117 11503	220Ω 1% 0.1W
3843	4822 051 30221	220Ω 5% 0.062W
3880	4822 051 30102	1k 5% 0.062W
3923	4822 051 30471	470Ω 5% 0.062W
3924	4822 051 30101	100Ω 5% 0.062W
3928	4822 051 30101	100Ω 5% 0.062W
3932	4822 051 30101	100Ω 5% 0.062W
3935	4822 051 30102	1k 5% 0.062W
3937	4822 051 30151	150Ω 5% 0.062W
3942	4822 051 30101	100Ω 5% 0.062W
3943	4822 051 30102	1k 5% 0.062W
3947	4822 051 30151	150Ω 5% 0.062W
3950	4822 117 11504	270Ω 1% 0.1W
3951	4822 051 20339	33Ω 5% 0.1W
3952	4822 117 11504	270Ω 1% 0.1W
3953	4822 117 11448	180Ω 1% 0.1W
3954	4822 051 20391	390Ω 5% 0.1W
3955	4822 117 11503	220Ω 1% 0.1W
3956	4822 117 10361	680Ω 1% 0.1W
3957	4822 117 10361	680Ω 1% 0.1W
3958	4822 117 10361	680Ω 1% 0.1W
3963	4822 051 10102	1k 2% 0.25W
3964	4822 051 10102	1k 2% 0.25W
3965	4822 051 10102	1k 2% 0.25W
3972	4822 051 30471	470Ω 5% 0.062W
3974	4822 051 30101	100Ω 5% 0.062W
3978	4822 051 30101	100Ω 5% 0.062W
3981	4822 051 30101	100Ω 5% 0.062W
3983	4822 051 30102	1k 5% 0.062W
3987	4822 051 30151	150Ω 5% 0.062W
3991	4822 051 30101	100Ω 5% 0.062W
3992	4822 051 30102	1k 5% 0.062W
3997	4822 051 30151	150Ω 5% 0.062W
3999	4822 051 10102	1k 2% 0.25W
4xxx	4822 051 10008	Jumper 1206
4xxx	4822 051 20008	Jumper 0805

5101	4822 157 11775	6.8µH 5% 5X3
5102	4822 157 71303	0.39µH 10% 0805
5103	4822 157 11776	Coil var. 40.4MHz
5106	4822 157 10977	4.7µH 10%
5108	4822 157 11534	Coil var. 78MHz
5501	4822 157 11775	6.8µH 5% 5X3
5502	4822 157 11775	6.8µH 5% 5X3
5620	4822 157 11775	6.8µH 5% 5X3
5621	4822 157 11775	6.8µH 5% 5X3
5752	4822 157 71694	0.82µH 10%
5880	2422 535 94406	2.7µH 10%
5881	4822 157 71694	0.82µH 10%
5882	4822 157 71694	0.82µH 10%
5921	4822 157 10586	2.2µH 10% 0805
5971	4822 157 10586	2.2µH 10% 0805

6103	4822 130 11525	1SS356
6104	4822 130 11525	1SS356
6106	4822 130 83757	MCL4148
6107	4822 130 83757	MCL4148
6880	9322 129 32685	BZM55-C2V7
6881	9322 129 32685	BZM55-C2V7
6883	4822 130 11422	PLVA2650A
6884	4822 130 11422	PLVA2650A

7103	4822 130 60511	BC847B
7104	4822 130 60511	BC847B
7107	4822 130 60373	BC856B
7111	4822 130 60511	BC847B
7501	9352 625 24518	TDA9321H/N2
7502	4822 130 60511	BC847B
7600	9350 399 00118	TDA9820T/V1
7620	5322 209 16349	TDA7309D
7621	4822 130 60511	BC847B
7622	4822 130 60373	BC856B
7700	9352 637 90557	SAB9079HS/N2
7750	9322 124 83668	MSM5416283-60GS
7757	4822 209 31378	NJM4556MB
7800	4822 209 12776	TDA8601T/C1
7821	9322 135 04668	74V1G08
7840	5322 209 14481	HEF4053BT
7860	4822 209 13252	PCF8574TS/F3
7880	9322 116 74668	LD1117D33
7881	9322 116 74668	LD1117D33
7903	4822 130 60383	BF824
7904	4822 130 60383	BF824
7905	4822 130 60383	BF824

7920	4822 130 60511	BC847B
7930	4822 130 60511	BC847B
7940	4822 130 60511	BC847B
7970	4822 130 60511	BC847B
7980	4822 130 60511	BC847B
7990	4822 130 60511	BC847B
7991	4822 209 16868	M24C04-WMN6

Multi Channel Sound Panel [N]

Various

0328	4822 267 10981	11P male black
0329	4822 267 10962	11P male white
0330	2422 025 14904	7P male white
0347	4822 267 10969	3P male red
0373	4822 267 10978	7P male black
0381	4822 267 10963	3P male white
1705	2422 086 10581	Prot dev 65V 400mA
1804	2422 543 01217	Crystal 40 MHz
1805	2422 543 01025	Crystal 16.93 MHz
1806	2422 543 01015	Crystal 10 MHz
1807	4822 252 51169	Fuse 0,25A
1998	2422 025 16194	Socket 8P for transmitter
1999	2422 026 04961	Socket cinch 6P white/red/ black
8328	3104 301 08912	Cable 11P 220mm black
8330	3104 301 08952	Cable 7P 820mm white
8373	3104 301 08922	Cable 7P 280mm black
8381	3104 301 08932	Cable 3P 140mm white

⊣⊢

2500	4822 126 14315	390pF 5% 50V 0603
2501	4822 126 14315	390pF 5% 50V 0603
2504	5322 126 11583	10nF 10% 50V 0603
2505	4822 126 14305	100nF 10% 16V 0603
2506	4822 126 14305	100nF 10% 16V 0603
2507	2222 867 15339	33pF 5% 50V 0603
2508	2222 867 15339	33pF 5% 50V 0603
2511	4822 126 12105	33nF 5% 50V
2516	4822 122 31765	100pF 2% 63V
2517	4822 122 31765	100pF 2% 63V
2534	5322 126 11583	10nF 10% 50V 0603
2539	4822 126 14506	270pF 5% 50V 0603
2540	4822 126 14305	100nF 10% 16V 0603
2541	4822 126 14305	100nF 10% 16V 0603
2542	4822 124 23002	10µF 16V
2543	4822 124 23002	10µF 16V
2545	4822 124 23002	10µF 16V
2546	4822 124 23002	10µF 16V
2548	4822 126 14549	33nF 16V O6O3
2549	5322 126 11579	3.3nF 10% 63V
2551	4822 126 14549	33nF 16V O6O3
2552	4822 126 14549	33nF 16V O6O3
2553	3198 017 34730	47nF 16V 0603
2555	4822 124 23002	10µF 16V
2556	5322 126 11579	3.3nF 10% 63V
2557	4822 126 14549	33nF 16V O6O3
2560	3198 017 34730	47nF 16V 0603
2562	4822 124 23002	10µF 16V
2563	4822 124 23002	10µF 16V
2564	4822 124 23002	10µF 16V
2565	4822 126 14305	100nF 10% 16V 0603
2566	4822 126 14305	100nF 10% 16V 0603
2567	2222 867 15339	33pF 5% 50V 0603
2568	2222 867 15339	33pF 5% 50V 0603
2569	4822 124 23002	10µF 16V
2570	4822 126 14305	100nF 10% 16V 0603
2571	4822 126 14305	100nF 10% 16V 0603
2572	4822 124 23002	10µF 16V
2573	4822 124 23002	10µF 16V
2574	4822 124 23002	10µF 16V
2575	4822 124 23002	10µF 16V
2576	4822 124 23002	10µF 16V
2577	4822 124 23002	10µF 16V
2578	4822 126 14549	33nF 16V O6O3
2579	5322 126 11579	3.3nF 10% 63V
2580	4822 126 14549	33nF 16V O6O3
2583	3198 017 34730	47nF 16V 0603
2585	2222 867 15339	33pF 5% 50V 0603
2586	5322 126 11579	3.3nF 10% 63V
2587	4822 126 14494	22nF 10% 25V 0603
2590	3198 017 34730	47nF 16V 0603
2592	4822 124 23002	10µF 16V
2593	4822 124 23002	10µF 16V
2594	4822 124 23002	10µF 16V
2595	4822 126 14305	100nF 10% 16V 0603
2596	4822 126 14305	100nF 10% 16V 0603
2597	2222 867 15339	33pF 5% 50V 0603
2598	2222 867 15339	33pF 5% 50V 0603
2599	5322 126 11582	6.8nF 10% 63V
2600	4822 126 14305	100nF 10% 16V 0603
2601	4822 126 14305	100nF 10% 16V 0603
2602	4822 124 23002	10µF 16V
2603	4822 124 23002	10µF 16V
2605	4822 124 23002	10µF 16V
2606	4822 124 23002	10µF 16V
2607	4822 124 23002	10µF 16V
2609	5322 126 11579	3.3nF 10% 63V
2612	4822 124 40207	100µF 20% 25V
2613	3198 017 34730	47nF 16V 0603
2620	3198 017 34730	47nF 16V 0603
2622	4822 124 23002	10µF 16V
2623	4822 124 23002	10µF 16V
2624	4822 124 23002	10µF 16V
2625	4822 126 14305	100nF 10% 16V 0603
2626	4822 126 14305	100nF 10% 16V 0603
2627	2222 867 15339	33pF 5% 50V 0603
2628	2222 867 15339	33pF 5% 50V 0603
2635	4822 126 14305	100nF 10% 16V 0603
2636	4822 126 14305	100nF 10% 16V 0603
2637	5322 121 42498	680nF 5% 63V
2638	5322 121 42498	680nF 5% 63V
2639	4822 126 14305	100nF 10% 16V 0603
2641	5322 121 42498	680nF 5% 63V
2643	2222 867 15339	33pF 5% 50V 0603
2667	4822 126 14494	22nF 10% 25V 0603
2668	5322 126 11582	6.8nF 10% 63V
2669	2222 867 15339	33pF 5% 50V 0603
2679	4822 126 14585	100nF 10% 50V
2680	4822 126 14585	100nF 10% 50V
2681	5322 122 32659	33pF 5% 50V
2682	5322 122 32659	33pF 5% 50V
2690	4822 126 14305	100nF 10% 16V 0603
2704	4822 126 14305	100nF 10% 16V 0603
2705	4822 124 12095	100µF 20% 16V
2706	4822 126 14585	100nF 10% 50V
2707	4822 124 40248	10µF 20% 63V
2708	4822 126 14585	100nF 10% 50V
2709	4822 124 21913	1µF 20% 63V
2710	4822 124 40248	10µF 20% 63V
2711	4822 126 14585	100nF 10% 50V
2712	4822 124 21913	1µF 20% 63V
2713	4822 126 14585	100nF 10% 50V
2715	5322 122 32531	100pF 5% 50V
2716	4822 122 33575	220pF 5% 63V
2717	5322 122 32531	100pF 5% 50V
2718	4822 122 33575	220pF 5% 63V
2719	5322 122 32531	100pF 5% 50V
2720	4822 122 33575	220pF 5% 63V
2721	5322 122 32531	100pF 5% 50V
2722	4822 122 33575	220pF 5% 63V
2724	5322 122 32531	100pF 5% 50V
2725	5322 122 32531	100pF 5% 50V
2726	4822 122 33575	220pF 5% 63V
2727	4822 126 14585	100nF 10% 50V
2728	4822 126 14305	100nF 10% 16V 0603
2729	4822 126 14585	100nF 10% 50V
2730	5322 122 32531	100pF 5% 50V
2731	5322 122 32531	100pF 5% 50V
2732	5322 122 32531	100pF 5% 50V
2733	5322 122 32531	100pF 5% 50V
2736	4822 124 81151	22µF 50V
2737	4822 126 14585	100nF 10% 50V
2738	4822 124 40207	100µF 20% 25V
2740	5322 126 11583	10nF 10% 50V 0603
2741	5322 126 11583	10nF 10% 50V 0603
2745	4822 126 14494	22nF 10% 25V 0603
2746	5322 126 11583	10nF 10% 50V 0603
2747	5322 126 11583	10nF 10% 50V 0603
2749	4822 126 14494	22nF 10% 25V 0603
2752	5322 126 11583	10nF 10% 50V 0603
2753	5322 126 11583	10nF 10% 50V 0603
2755	4822 126 14494	22nF 10% 25V 0603
2780	4822 126 14305	100nF 10% 16V 0603
2781	4822 126 14305	100nF 10% 16V 0603
2784	4822 126 13344	1.5nF 5% 63V
2785	4822 126 13344	1.5nF 5% 63V
2786	2222 867 15339	33pF 5% 50V 0603
2787	2222 867 15339	33pF 5% 50V 0603
2790	4822 122 33177	10nF 20% 50V
2791	4822 124 22652	2.2µF 20% 50V
2793	4822 126 14506	270pF 5% 50V 0603
2794	5322 126 11583	10nF 10% 50V 0603
2795	5322 126 11583	10nF 10% 50V 0603
2796	4822 122 33177	10nF 20% 50V
2800	4822 126 14585	100nF 10% 50V
2802	4822 126 14585	100nF 10% 50V
2807	4822 126 14585	100nF 10% 50V
2809	4822 126 14585	100nF 10% 50V
2810	4822 126 14585	100nF 10% 50V
2811	4822 124 80151	47µF 16V
2812	4822 126 14305	100nF 10% 16V 0603
2813	4822 126 14305	100nF 10% 16V 0603
2814	4822 126 14305	100nF 10% 16V 0603
2815	4822 126 14305	100nF 10% 16V 0603
2816	4822 126 14305	100nF 10% 16V 0603
2817	4822 126 14585	100nF 10% 50V
2818	4822 126 14305	100nF 10% 16V 0603
2819	4822 126 14305	100nF 10% 16V 0603
2820	4822 126 13486	15pF 2% 63V
2821	4822 126 13486	15pF 2% 63V
2822	4822 126 14585	100nF 10% 50V
2823	4822 124 80151	47µF 16V
2824	4822 126 14585	100nF 10% 50V
2825	4822 126 14585	100nF 10% 50V
2826	4822 126 14305	100nF 10% 16V 0603
2827	4822 126 14305	100nF 10% 16V 0603
2828	4822 124 80151	47µF 16V
2829	4822 126 14305	100nF 10% 16V 0603
2830	4822 126 14305	100nF 10% 16V 0603
2831	5322 126 11583	10nF 10% 50V 0603
2832	3198 016 31020	0603 25V 1nF
2833	4822 126 13486	15pF 2% 63V
2834	4822 126 13486	15pF 2% 63V
2835	4822 124 80151	47µF 16V
2836	4822 126 14305	100nF 10% 16V 0603
2837	4822 122 33177	10nF 20% 50V
2838	4822 122 33761	22pF 5% 50V
2839	4822 122 33761	22pF 5% 50V
2840	4822 124 80151	47µF 16V
2841	4822 126 14585	100nF 10% 50V
2842	4822 124 80151	47µF 16V
2843	4822 126 14305	100nF 10% 16V 0603
2844	4822 124 80151	47µF 16V
2845	4822 126 14585	100nF 10% 50V
2846	4822 124 80151	47µF 16V
2847	5322 126 10511	1nF 5% 50V
2848	4822 122 31765	100pF 2% 63V
2849	4822 126 14585	100nF 10% 50V
2850	5322 122 32531	100pF 5% 50V
2851	5322 126 10511	1nF 5% 50V
2852	5322 122 32531	100pF 5% 50V
2853	4822 124 80151	47µF 16V
2854	5322 126 10511	1nF 5% 50V
2855	4822 124 80151	47µF 16V
2856	5322 126 10511	1nF 5% 50V
2857	4822 124 80151	47µF 16V
2858	5322 126 10511	1nF 5% 50V
2859	4822 124 80151	47µF 16V
2860	4822 126 14585	100nF 10% 50V
2861	4822 124 80151	47µF 16V
2862	5322 126 10511	1nF 5% 50V
2863	4822 124 80151	47µF 16V
2864	4822 126 14585	100nF 10% 50V
2865	4822 126 14585	100nF 10% 50V
2866	4822 126 14585	100nF 10% 50V
2867	4822 124 80151	47µF 16V
2868	4822 126 14585	100nF 10% 50V
2869	4822 126 14585	100nF 10% 50V
2870	4822 124 80151	47µF 16V
2871	4822 124 80151	47µF 16V
2872	5322 122 32531	100pF 5% 50V
2873	5322 126 10511	1nF 5% 50V
2874	4822 124 80151	47µF 16V
2875	4822 126 14585	100nF 10% 50V
2876	4822 124 80151	47µF 16V
2877	5322 122 32531	100pF 5% 50V
2878	5322 126 10511	1nF 5% 50V
2879	4822 124 80151	47µF 16V
2880	5322 126 10511	1nF 5% 50V
2881	4822 124 80151	47µF 16V
2882	5322 126 10511	1nF 5% 50V
2883	5322 122 32531	100pF 5% 50V
2885	4822 122 33761	22pF 5% 50V
2886	4822 122 33761	22pF 5% 50V
2887	4822 122 33761	22pF 5% 50V
2888	4822 122 33761	22pF 5% 50V
2889	4822 122 33761	22pF 5% 50V
2890	4822 122 33761	22pF 5% 50V
2891	4822 122 33761	22pF 5% 50V
2892	4822 122 33761	22pF 5% 50V
2893	4822 122 33761	22pF 5% 50V
2894	4822 122 33761	22pF 5% 50V
2900	5322 122 32531	100pF 5% 50V
2901	4822 122 31765	100pF 2% 63V
2909	4822 123 14025	16V 2200µF 20%

⊟

3500	4822 051 30332	3k3 5% 0.062W
3501	4822 051 30332	3k3 5% 0.062W
3504	4822 051 30121	120Ω 5% 0.062W
3505	4822 051 30103	10k 5% 0.062W
3506	4822 051 30103	10k 5% 0.062W
3507	4822 051 30103	10k 5% 0.062W
3508	4822 051 30103	10k 5% 0.062W

3510	4822 051 30103	10k 5% 0.062W
3511	4822 051 30103	10k 5% 0.062W
3513	4822 051 30103	10k 5% 0.062W
3514	4822 051 30103	10k 5% 0.062W
3515	4822 051 30562	5k6 5% 0.063W 0603
3516	4822 051 30123	12k 5% 0.062W
3517	4822 051 30562	5k6 5% 0.063W 0603
3518	4822 051 30123	12k 5% 0.062W
3530	4822 051 30682	6k8 5% 0.062W
3531	4822 051 30103	10k 5% 0.062W
3532	4822 051 30682	6k8 5% 0.062W
3533	4822 051 30103	10k 5% 0.062W
3534	4822 051 30121	120Ω 5% 0.062W
3540	4822 117 13632	100k 1% 0.62W 0603
3541	4822 051 30109	10Ω 5% 0.062W
3543	4822 051 30103	10k 5% 0.062W
3547	4822 051 30101	100Ω 5% 0.062W
3548	4822 117 13632	100k 1% 0.62W 0603
3550	4822 051 30103	10k 5% 0.062W
3551	4822 051 30393	39k 5% 0.062W
3553	4822 051 30103	10k 5% 0.062W
3554	4822 051 30101	100Ω 5% 0.062W
3555	4822 117 12925	47k 1% 0.063W 0603
3556	4822 117 12903	1k8 1% 0.063W 0603
3557	4822 051 30103	10k 5% 0.062W
3558	4822 051 30103	10k 5% 0.062W
3559	4822 051 30152	1k5 5% 0.062W
3560	4822 051 30103	10k 5% 0.062W
3561	4822 051 30103	10k 5% 0.062W
3562	4822 051 30393	39k 5% 0.062W
3563	4822 051 30103	10k 5% 0.062W
3564	4822 051 30152	1k5 5% 0.062W
3565	4822 051 30103	10k 5% 0.062W
3567	4822 051 30101	100Ω 5% 0.062W
3568	4822 051 30683	68k 5% 0.062W
3569	4822 051 30683	68k 5% 0.062W
3571	4822 051 30109	10Ω 5% 0.062W
3573	4822 051 30103	10k 5% 0.062W
3575	4822 051 30101	100Ω 5% 0.062W
3576	4822 051 30472	4k7 5% 0.062W
3577	4822 117 10834	47k 1% 0.1W
3578	4822 117 11373	100Ω 1% 0805
3580	4822 117 11817	1k2 1% 1/16W
3581	4822 117 12903	1k8 1% 0.063W 0603
3582	4822 117 11817	1k2 1% 1/16W
3583	4822 051 30103	10k 5% 0.062W
3584	4822 117 12903	1k8 1% 0.063W 0603
3585	4822 117 11817	1k2 1% 1/16W
3587	4822 051 30103	10k 5% 0.062W
3589	4822 051 30152	1k5 5% 0.062W
3590	4822 051 30103	10k 5% 0.062W
3591	4822 051 30103	10k 5% 0.062W
3593	4822 051 30103	10k 5% 0.062W
3594	4822 051 30152	1k5 5% 0.062W
3595	4822 051 30103	10k 5% 0.062W
3596	4822 051 30101	100Ω 5% 0.062W
3601	4822 051 30109	10Ω 5% 0.062W
3602	4822 117 13632	100k 1% 0.62W 0603
3603	4822 051 30103	10k 5% 0.062W
3605	4822 051 30333	33k 5% 0.062W
3606	4822 117 13632	100k 1% 0.62W 0603
3608	4822 051 30331	330Ω 5% 0.062W
3609	4822 051 30153	15k 5% 0.062W
3610	4822 117 10837	100k 1% 0.1W
3611	4822 117 10833	10k 1% 0.1W
3612	4822 051 30152	1k5 5% 0.062W
3613	4822 051 30103	10k 5% 0.062W
3614	4822 051 30153	15k 5% 0.062W
3615	4822 117 13632	100k 1% 0.62W 0603
3616	4822 117 13632	100k 1% 0.62W 0603
3617	4822 051 30103	10k 5% 0.062W
3619	4822 051 30152	1k5 5% 0.062W
3620	4822 051 30103	10k 5% 0.062W
3621	4822 051 30103	10k 5% 0.062W
3623	4822 051 30472	4k7 5% 0.062W
3624	4822 051 30391	390Ω 5% 0.062W
3625	4822 117 12902	8k2 1% 0.063W 0603
3626	4822 117 10837	100k 1% 0.1W
3627	4822 117 10837	100k 1% 0.1W
3628	4822 117 10837	100k 1% 0.1W
3629	4822 117 10837	100k 1% 0.1W
3630	4822 051 20223	22k 5% 0.1W
3631	4822 117 13632	100k 1% 0.62W 0603
3632	4822 117 12925	47k 1% 0.063W 0603
3633	4822 117 13632	100k 1% 0.62W 0603
3634	4822 051 30474	470k 5% 0.062W
3638	4822 051 30102	1k 5% 0.062W
3639	4822 051 30339	33Ω 5% 0.062W
3640	4822 051 30472	4k7 5% 0.062W
3645	4822 117 11507	6k8 1% 0.1W
3646	4822 051 20332	3k3 5% 0.1W
3647	4822 117 11507	6k8 1% 0.1W
3648	4822 051 20332	3k3 5% 0.1W
3649	4822 051 30681	680Ω 5% 0.062W
3650	4822 117 11507	6k8 1% 0.1W
3651	4822 051 30333	33k 5% 0.062W
3652	4822 117 11507	6k8 1% 0.1W
3653	4822 117 11507	6k8 1% 0.1W
3658	4822 051 30682	6k8 5% 0.062W
3659	4822 051 30222	2k2 5% 0.062W
3660	4822 051 30682	6k8 5% 0.062W
3661	4822 051 30222	2k2 5% 0.062W
3663	4822 051 20332	3k3 5% 0.1W
3664	4822 051 20332	3k3 5% 0.1W
3667	4822 117 10837	100k 1% 0.1W
3671	4822 117 10833	10k 1% 0.1W
3673	4822 117 10833	10k 1% 0.1W
3675	4822 117 10837	100k 1% 0.1W
3676	4822 117 10833	10k 1% 0.1W
3678	4822 117 10833	10k 1% 0.1W
3679	4822 117 11507	6k8 1% 0.1W
3680	4822 117 11507	6k8 1% 0.1W
3682	4822 117 10837	100k 1% 0.1W
3683	4822 051 20332	3k3 5% 0.1W
3684	4822 117 10837	100k 1% 0.1W
3685	4822 117 10837	100k 1% 0.1W
3686	4822 117 10837	100k 1% 0.1W
3687	4822 051 20332	3k3 5% 0.1W
3688	4822 117 11507	6k8 1% 0.1W
3699	4822 117 10833	10k 1% 0.1W
3700	4822 117 10833	10k 1% 0.1W
3701	4822 117 13632	100k 1% 0.62W 0603
3702	4822 051 30331	330Ω 5% 0.062W
3703	4822 051 30391	390Ω 5% 0.062W
3704	4822 117 12902	8k2 1% 0.063W 0603
3705	4822 051 30221	220Ω 5% 0.062W
3706	4822 051 30221	220Ω 5% 0.062W
3707	4822 051 20471	470Ω 5% 0.1W
3708	4822 051 20471	470Ω 5% 0.1W
3709	4822 051 20471	470Ω 5% 0.1W
3710	4822 117 10837	100k 1% 0.1W
3711	4822 117 10833	10k 1% 0.1W
3712	4822 117 10837	100k 1% 0.1W
3713	4822 117 10833	10k 1% 0.1W
3715	4822 051 20471	470Ω 5% 0.1W
3716	4822 051 20223	22k 5% 0.1W
3717	4822 051 20471	470Ω 5% 0.1W
3718	4822 051 20223	22k 5% 0.1W
3719	4822 051 20471	470Ω 5% 0.1W
3720	4822 051 20223	22k 5% 0.1W
3721	4822 051 20471	470Ω 5% 0.1W
3722	4822 051 20223	22k 5% 0.1W
3724	4822 051 20223	22k 5% 0.1W
3725	4822 051 20471	470Ω 5% 0.1W
3726	4822 051 20223	22k 5% 0.1W
3727	4822 051 30103	10k 5% 0.062W
3728	4822 051 30333	33k 5% 0.062W
3729	4822 051 30683	68k 5% 0.062W
3730	4822 117 10353	150Ω 1% 0.1W
3731	4822 051 20223	22k 5% 0.1W
3732	4822 117 10353	150Ω 1% 0.1W
3733	4822 051 20223	22k 5% 0.1W
3734	4822 117 11503	220Ω 1% 0.1W
3735	4822 117 11503	220Ω 1% 0.1W
3737	4822 051 30683	68k 5% 0.062W
3738	4822 051 20471	470Ω 5% 0.1W
3739	4822 051 20471	470Ω 5% 0.1W
3740	4822 117 12902	8k2 1% 0.063W 0603
3741	4822 117 12902	8k2 1% 0.063W 0603
3742	4822 051 30392	3k9 5% 0.063W 0603
3743	4822 051 30101	100Ω 5% 0.062W
3744	4822 051 30271	270Ω 5% 0.062W
3745	4822 051 30102	1k 5% 0.062W
3746	4822 117 12902	8k2 1% 0.063W 0603
3747	4822 117 12902	8k2 1% 0.063W 0603
3748	4822 051 30392	3k9 5% 0.063W 0603
3749	4822 051 30101	100Ω 5% 0.062W
3750	4822 051 30271	270Ω 5% 0.062W
3751	4822 051 30102	1k 5% 0.062W
3752	4822 117 12902	8k2 1% 0.063W 0603
3753	4822 117 12902	8k2 1% 0.063W 0603
3754	4822 051 30392	3k9 5% 0.063W 0603
3755	4822 051 30101	100Ω 5% 0.062W
3756	4822 051 30271	270Ω 5% 0.062W
3757	4822 051 30102	1k 5% 0.062W
3758	4822 051 30472	4k7 5% 0.062W
3759	4822 051 30472	4k7 5% 0.062W
3760	4822 051 30472	4k7 5% 0.062W
3761	4822 117 10837	100k 1% 0.1W
3762	4822 051 20223	22k 5% 0.1W
3763	4822 051 20472	4k7 5% 0.1W
3764	4822 117 11449	2k2 5% 0.1W 0805
3766	4822 051 20561	560Ω 5% 0.1W
3769	4822 051 20561	560Ω 5% 0.1W
3784	4822 051 10102	1k 2% 0.25W
3785	4822 051 10102	1k 2% 0.25W
3786	4822 051 30332	3k3 5% 0.062W
3787	4822 051 30682	6k8 5% 0.062W
3788	4822 051 30332	3k3 5% 0.062W
3789	4822 051 30682	6k8 5% 0.062W
3790	4822 051 20121	120Ω 5% 0.1W
3791	4822 051 30102	1k 5% 0.062W
3792	4822 051 30393	39k 5% 0.062W
3793	4822 051 30103	10k 5% 0.062W
3795	4822 051 30223	22k 5% 0.062W
3796	4822 051 20121	120Ω 5% 0.1W
3799	4822 051 20223	22k 5% 0.1W
3800	4822 117 11927	75Ω 1% 0.1W
3801	4822 117 11927	75Ω 1% 0.1W
3803	4822 117 11151	1Ω 5%
3804	4822 051 20105	1M 5% 0.1W
3805	4822 117 10833	10k 1% 0.1W
3807	4822 051 30101	100Ω 5% 0.062W
3808	4822 051 30103	10k 5% 0.062W
3809	4822 051 30101	100Ω 5% 0.062W
3810	4822 117 11373	100Ω 1% 0805
3811	4822 051 30101	100Ω 5% 0.062W
3812	4822 117 11373	100Ω 1% 0805
3813	4822 051 30101	100Ω 5% 0.062W
3814	4822 117 11373	100Ω 1% 0805
3815	4822 117 11373	100Ω 1% 0805
3816	4822 051 30103	10k 5% 0.062W
3817	4822 051 30103	10k 5% 0.062W
3818	4822 051 30103	10k 5% 0.062W
3819	4822 051 30103	10k 5% 0.062W
3820	4822 051 30103	10k 5% 0.062W
3821	4822 051 30103	10k 5% 0.062W
3822	4822 117 12984	3Ω3 5% 0.125W 1206
3823	4822 117 12984	3Ω3 5% 0.125W 1206
3824	4822 117 11148	56k 1% 0.1W
3825	4822 051 20334	330k 5% 0.1W
3826	4822 051 20334	330k 5% 0.1W
3827	4822 117 11927	75Ω 1% 0.1W
3828	4822 051 30562	5k6 5% 0.063W 0603
3829	4822 051 30562	5k6 5% 0.063W 0603
3830	4822 051 30123	12k 5% 0.062W
3831	4822 051 30123	12k 5% 0.062W
3834	4822 051 30151	150Ω 5% 0.062W
3835	4822 051 20333	33k 5% 0.1W
3836	3198 021 52240	220k 5% 0805
3837	4822 117 11373	100Ω 1% 0805
3838	4822 117 12984	3Ω3 5% 0.125W 1206
3839	4822 051 30103	10k 5% 0.062W
3840	4822 051 30103	10k 5% 0.062W
3841	4822 051 30103	10k 5% 0.062W
3842	4822 051 30103	10k 5% 0.062W
3843	4822 051 30103	10k 5% 0.062W
3844	4822 117 10833	10k 1% 0.1W
3848	4822 051 20105	1M 5% 0.1W
3849	4822 051 30102	1k 5% 0.062W
3850	4822 117 10833	10k 1% 0.1W
3851	4822 117 12984	3Ω3 5% 0.125W 1206
3852	4822 117 13572	22Ω 5% 1206
3854	4822 117 10833	10k 1% 0.1W
3855	4822 117 12984	3Ω3 5% 0.125W 1206
3856	4822 117 13572	22Ω 5% 1206
3857	4822 117 11373	100Ω 1% 0805
3858	4822 051 30103	10k 5% 0.062W
3859	4822 051 30103	10k 5% 0.062W
3861	4822 117 10833	10k 1% 0.1W
3863	4822 117 10833	10k 1% 0.1W
3864	4822 117 11373	100Ω 1% 0805
3865	4822 051 30103	10k 5% 0.062W
3866	4822 117 10833	10k 1% 0.1W
3868	4822 117 11373	100Ω 1% 0805
3869	4822 117 10833	10k 1% 0.1W
3870	4822 117 11373	100Ω 1% 0805
3871	4822 117 10833	10k 1% 0.1W
3872	4822 117 11373	100Ω 1% 0805
3873	4822 117 10833	10k 1% 0.1W
3874	4822 117 11373	100Ω 1% 0805
3875	4822 117 10833	10k 1% 0.1W
3876	4822 117 12984	3Ω3 5% 0.125W 1206
3877	4822 117 12984	3Ω3 5% 0.125W 1206
3878	4822 117 10837	100k 1% 0.1W
3879	4822 051 20684	680k 5% 0.1W
3880	4822 117 10837	100k 1% 0.1W
3881	4822 051 20105	1M 5% 0.1W
3882	4822 117 11373	100Ω 1% 0805
3883	4822 117 10833	10k 1% 0.1W
3884	4822 117 11373	100Ω 1% 0805
3885	4822 117 10833	10k 1% 0.1W
3886	4822 051 30101	100Ω 5% 0.062W
3888	4822 051 30103	10k 5% 0.062W
3889	4822 117 11373	100Ω 1% 0805
3890	4822 051 30101	100Ω 5% 0.062W
3891	4822 051 20472	4k7 5% 0.1W
3892	4822 051 30101	100Ω 5% 0.062W
3893	4822 051 30101	100Ω 5% 0.062W
3894	4822 051 30101	100Ω 5% 0.062W
4xxx	4822 051 10008	Jumper 1206
4xxx	4822 051 20008	Jumper 0805

5703	4822 157 11876	6.8µH 10% 0805
5704	4822 157 11876	6.8µH 10% 0805
5801	4822 157 71411	3.3µH 10%

6525	4822 130 11423	PLVA2656A
6600	4822 130 83757	MCL4148
6637	4822 130 83757	MCL4148
6638	4822 130 83757	MCL4148
6708	9322 129 38685	BZM55-C6V8
6709	9322 129 38685	BZM55-C6V8
6710	9322 129 39685	BZM55-C8V2
6715	9322 129 40685	BZM55-C10
6716	9322 129 40685	BZM55-C10
6717	9322 129 40685	BZM55-C10
6718	9322 129 40685	BZM55-C10
6719	9322 129 40685	BZM55-C10
6720	9322 129 40685	BZM55-C10
6721	9322 129 40685	BZM55-C10
6722	9322 129 40685	BZM55-C10
6723	9322 129 40685	BZM55-C10
6724	9322 129 40685	BZM55-C10
6725	9322 129 40685	BZM55-C10
6726	9322 129 40685	BZM55-C10
6730	9322 129 40685	BZM55-C10
6731	9322 129 40685	BZM55-C10
6732	9322 129 40685	BZM55-C10
6733	9322 129 40685	BZM55-C10
6734	4822 130 11423	PLVA2656A
6801	4822 209 16978	LF33CV

7505	4822 209 30095	LM833D
7510	4822 130 60511	BC847B
7512	4822 130 60511	BC847B
7540	9322 127 49668	TDA7438D
7541	4822 209 30095	LM833D
7543	4822 209 30095	LM833D
7544	4822 209 30095	LM833D
7565	4822 209 30095	LM833D
7570	9322 127 49668	TDA7438D
7595	4822 209 30095	LM833D
7600	9322 127 49668	TDA7438D
7601	4822 130 60511	BC847B
7602	4822 130 60511	BC847B
7603	4822 130 60511	BC847B
7604	4822 130 60373	BC856B
7605	4822 130 60511	BC847B
7610	4822 130 60511	BC847B
7611	4822 130 60511	BC847B
7625	4822 209 30095	LM833D
7630	5322 209 11102	HEF4052BT
7635	4822 209 30095	LM833D
7665	5322 209 11102	HEF4052BT
7667	4822 130 60511	BC847B
7675	4822 130 60511	BC847B
7679	4822 209 30095	LM833D
7685	5322 209 11102	HEF4052BT
7690	4822 209 13252	PCF8574TS/F3
7695	5322 209 11102	HEF4052BT
7696	4822 130 60511	BC847B
7705	5322 209 81856	LM7912CT
7706	4822 209 81726	MC7812CT
7707	4822 130 60511	BC847B
7708	4822 130 60511	BC847B
7709	4822 130 60511	BC847B
7710	4822 130 60511	BC847B
7712	4822 130 60511	BC847B
7713	4822 130 60511	BC847B
7740	4822 209 30095	LM833D
7780	4822 209 30095	LM833D
7781	4822 130 60373	BC856B
7800	9352 317 00118	74LVC125AD
7801	9352 629 51557	SAA2505H/M1 (PHSE)
7802	4822 209 14863	LC8904Q
7804	4822 209 30095	LM833D
7805	4822 209 17423	UAD1328T
7806	9352 617 90118	UDA1344TS
7807	4822 130 60511	BC847B

Side I/O Panel [O]

Various

0044	3104 304 23481	Bracket side I/O FL11
1326	4822 267 10975	3P male
1327	4822 267 31014	Socket headphone 3.5mm
1328	2422 026 05133	Socket SVHS
1333	2422 025 12485	11P male
1344	4822 267 10735	3P male
1346	2422 025 16382	03P male black
8333	4822 320 12505	Cable 11P 820mM
8344	3104 301 09451	Cable 3P 560mm white
8346	3104 311 00131	Cable 3P 560mm black

2804	5322 122 32531	100pF 5% 50V
2805	5322 122 32531	100pF 5% 50V
2807	4822 126 14076	220nF 20-80% 25V
2810	4822 126 12105	33nF 5% 50V
2811	4822 124 40207	100µF 20% 25V
2813	4822 124 22652	2.2µF 20% 50V
2832	4822 122 33177	10nF 20% 50V
2834	4822 122 33177	10nF 20% 50V

3801	4822 117 11927	75Ω 1% 0.1W
3803	4822 050 11002	1k 1% 0.4W
3804	4822 050 11002	1k 1% 0.4W
3808	4822 051 20008	Jumper 0805
3809	4822 051 20008	Jumper 0805
3810	4822 051 20684	680k 5% 0.1W
3811	4822 051 20393	39k 5% 0.1W
3812	4822 051 20154	150k 5% 0.1W
3813	4822 051 20392	3k9 5% 0.1W
3814	4822 117 11449	2k2 5% 0.1W 0805
3815	4822 051 20399	39Ω 5% 0.1W
3816	4822 051 20399	39Ω 5% 0.1W
3826	4822 116 52206	120Ω 5% 0.5W
3827	4822 116 52206	120Ω 5% 0.5W
3828	4822 116 52206	120Ω 5% 0.5W
3829	4822 116 52206	120Ω 5% 0.5W
3830	4822 050 21003	10k 1% 0.6W
3842	4822 050 21003	10k 1% 0.6W
3845	4822 051 20472	4k7 5% 0.1W
3846	4822 117 10833	10k 1% 0.1W
3847	4822 117 10833	10k 1% 0.1W
3848	4822 051 20562	5k6 5% 0.1W 0805
3849	4822 051 20332	3k3 5% 0.1W
4xxx	4822 051 10008	Jumper 1206
4xxx	4822 051 20008	Jumper 0805

5800	4822 157 11228	100µH 5%

6801	9322 129 38685	BZM55-C6V8
6802	9322 129 38685	BZM55-C6V8
6803	9322 129 40685	BZM55-C10
6804	9322 129 40685	BZM55-C10
6805	9322 129 40685	BZM55-C10
6806	9322 129 40685	BZM55-C10
6807	9322 129 38685	BZM55-C6V8
6808	9322 129 38685	BZM55-C6V8

7811	4822 130 60373	BC856B
7812	4822 130 60373	BC856B
7813	4822 130 60511	BC847B

Top Control Panel [P]

Various

0055	3104 307 98241	Top control keypad FL11
0057	3104 304 23431	Topcontrol bottom FL11
0111	3104 304 24851	Topcontrol ESD foil
8345	3104 301 07771	Cable 3P 1200mm white
8345	3104 311 01101	Cable 3P 1000mm

Autoscavem Panel [SC]

Various

0360	4822 267 10967	3P
0361	4822 267 10967	3P
1382	2422 025 17408	9P male

2006	4822 126 14305	100nF 10% 16V 0603
2008	4822 126 14494	22nF 10% 25V 0603
2010	4822 126 14305	100nF 10% 16V 0603
2012	4822 126 14494	22nF 10% 25V 0603
2014	4822 126 14494	22nF 10% 25V 0603
2016	3198 016 33380	3.3pF 50V 0603
2020	4822 126 14494	22nF 10% 25V 0603
2022	3198 017 41050	1µF 10V 0603
2024	4822 126 14494	22nF 10% 25V 0603
2026	3198 017 41050	1µF 10V 0603
2028	3198 017 41050	1µF 10V 0603
2038	4822 126 14494	22nF 10% 25V 0603
2040	4822 126 14225	56pF 5% 50V 0603
2200	4822 126 13193	4.7nF 10% 63V
2202	5322 126 11578	1nF 10% 50V 0603
2204	3198 017 41050	1µF 10V 0603
2206	3198 017 41050	1µF 10V 0603
2208	4822 124 41584	100µF 20% 10V
2600	4822 124 80791	470µF 20% 16V

3000	4822 051 30101	100Ω 5% 0.062W
3002	4822 051 30101	100Ω 5% 0.062W
3004	4822 051 30101	100Ω 5% 0.062W
3006	4822 051 30222	2k2 5% 0.062W
3008	4822 051 30222	2k2 5% 0.062W
3010	4822 051 30222	2k2 5% 0.062W
3012	4822 051 30562	5k6 5% 0.063W 0603
3014	4822 051 30272	2k7 5% 0.062W
3016	4822 051 30153	15k 5% 0.062W
3018	4822 117 12903	1k8 1% 0.063W 0603
3020	4822 051 30561	560Ω 5% 0.062W
3022	4822 051 30393	39k 5% 0.062W
3024	4822 051 30123	12k 5% 0.062W
3028	4822 051 30223	22k 5% 0.062W
3030	4822 051 30683	68k 5% 0.062W
3032	4822 051 20182	1k8 5% 0.1W
3034	4822 051 30222	2k2 5% 0.062W
3036	4822 051 30332	3k3 5% 0.062W
3038	4822 051 30561	560Ω 5% 0.062W
3040	4822 117 12925	47k 1% 0.063W 0603
3042	4822 051 30682	6k8 5% 0.062W
3044	4822 051 10102	1k 2% 0.25W
3046	4822 117 12903	1k8 1% 0.063W 0603
3048	4822 117 12903	1k8 1% 0.063W 0603
3050	4822 051 30561	560Ω 5% 0.062W
3052	4822 051 30561	560Ω 5% 0.062W
3054	4822 051 30222	2k2 5% 0.062W
3056	4822 051 30222	2k2 5% 0.062W
3058	4822 051 30681	680Ω 5% 0.062W
3060	4822 051 30681	680Ω 5% 0.062W
3062	4822 051 30222	2k2 5% 0.062W
3064	4822 117 12971	15Ω 5% 0.62W 0603
3066	4822 051 30123	12k 5% 0.062W
3068	4822 051 30681	680Ω 5% 0.062W
3070	4822 117 12902	8k2 1% 0.063W 0603
3072	4822 051 30152	1k5 5% 0.062W
3074	4822 051 30101	100Ω 5% 0.062W
3076	4822 117 11817	1k2 1% 1/16W
3078	4822 051 30102	1k 5% 0.062W
3080	4822 117 12925	47k 1% 0.063W 0603
3082	4822 051 30682	6k8 5% 0.062W
3084	4822 051 30102	1k 5% 0.062W
3086	4822 051 30222	2k2 5% 0.062W
3088	4822 051 30102	1k 5% 0.062W
3090	4822 051 30222	2k2 5% 0.062W
3092	4822 051 30393	39k 5% 0.062W
3094	4822 051 30223	22k 5% 0.062W
3096	4822 117 11449	2k2 5% 0.1W 0805
3102	4822 051 30152	1k5 5% 0.062W
3106	4822 051 30102	1k 5% 0.062W
3108	4822 117 12925	47k 1% 0.063W 0603
3110	4822 051 30472	4k7 5% 0.062W
3112	4822 051 30392	3k9 5% 0.063W 0603
3114	4822 051 30181	180Ω 5% 0.062W
3116	4822 051 30102	1k 5% 0.062W
3118	4822 051 30333	33k 5% 0.062W
3120	4822 051 30333	33k 5% 0.062W
3200	4822 051 30152	1k5 5% 0.062W
3202	4822 051 30271	270Ω 5% 0.062W
3204	4822 117 12925	47k 1% 0.063W 0603
3206	4822 051 30682	6k8 5% 0.062W
3208	4822 117 12903	1k8 1% 0.063W 0603
3210	4822 051 30681	680Ω 5% 0.062W
3212	4822 051 30123	12k 5% 0.062W
3214	4822 051 30474	470k 5% 0.062W
3216	4822 117 12925	47k 1% 0.063W 0603
3218	4822 051 30153	15k 5% 0.062W
3220	4822 051 30153	15k 5% 0.062W

3222	4822 051 30682	6k8 5% 0.062W
3224	4822 117 11817	1k2 1% 1/16W
3226	4822 051 30152	1k5 5% 0.062W
3228	4822 051 30101	100Ω 5% 0.062W
3230	4822 051 30103	10k 5% 0.062W
3232	4822 051 30153	15k 5% 0.062W
3234	4822 117 12968	820Ω 5% 0.62W
3236	4822 051 30222	2k2 5% 0.062W
3238	4822 117 12139	22Ω 5% 0.062W
3240	4822 051 30472	4k7 5% 0.062W
3242	4822 051 30689	68Ω 5% 0.063W 0603
3244	4822 117 13632	100k 1% 0.62W 0603
3500	4822 051 30101	100Ω 5% 0.062W
3502	4822 051 30101	100Ω 5% 0.062W
3600	4822 117 11151	1Ω 5%

5600	4822 157 11778	5μH 6 10%

6000	5322 130 80119	BBY40

7000	4822 130 60373	BC856B
7002	4822 130 60373	BC856B
7004	4822 130 60373	BC856B
7006	5322 130 42718	BFS20
7008	4822 130 60383	BF824
7010	5322 130 42718	BFS20
7012	5322 130 42718	BFS20
7014	4822 130 60383	BF824
7016	5322 130 42718	BFS20
7018	5322 130 42718	BFS20
7020	4822 130 60383	BF824
7022	5322 130 42718	BFS20
7024	5322 130 42718	BFS20
7026	5322 130 42718	BFS20
7028	5322 130 42718	BFS20
7030	5322 130 42718	BFS20
7032	5322 130 42718	BFS20
7038	5322 130 42718	BFS20
7040	5322 130 42718	BFS20
7042	4822 130 60383	BF824
7200	4822 130 60511	BC847B
7202	4822 130 60373	BC856B
7204	4822 130 60373	BC856B
7206	5322 130 42718	BFS20
7208	4822 130 60511	BC847B
7210	5322 130 42718	BFS20
7212	4822 130 60511	BC847B
7500	5322 209 90559	TDA8444T/N4

Wireless Transmitter [R]

Various

0320	4304 078 89100	Transmitter 433MHz
0320	4304 078 89110	Transmitter 864MHz

2100	4822 126 14043	1μF 20% 16V
2101	4822 126 14043	1μF 20% 16V
2102	4822 126 13222	390pF 2% 63V
2103	4822 126 13222	390pF 2% 63V
2104	4822 126 13222	390pF 2% 63V
2105	4822 126 13222	390pF 2% 63V
2106	4822 126 13222	390pF 2% 63V
2107	4822 126 13222	390pF 2% 63V
2108	4822 126 13222	390pF 2% 63V
2109	4822 126 13222	390pF 2% 63V
2110	4822 126 10326	180pF 5% 63V
2111	4822 126 10326	180pF 5% 63V
2112	4822 126 10326	180pF 5% 63V
2113	4822 126 10326	180pF 5% 63V
2114	4822 124 22652	2.2μF 20% 50V
2115	4822 124 22652	2.2μF 20% 50V
2116	5322 122 32268	470pF 10% 50V
2117	5322 122 32268	470pF 10% 50V
2118	5322 126 10223	4.7nF 10% 63V
2119	5322 126 10223	4.7nF 10% 63V
2120	4822 124 40248	10μF 20% 63V
2121	4822 124 40248	10μF 20% 63V
2122	4822 121 51319	1μF 10% 63V
2123	4822 121 51319	1μF 10% 63V
2124	4822 124 22652	2.2μF 20% 50V
2125	4822 124 22652	2.2μF 20% 50V
2126	5322 122 32654	22nF 10% 63V
2127	5322 122 32654	22nF 10% 63V
2128	4822 124 22652	2.2μF 20% 50V
2129	4822 124 22652	2.2μF 20% 50V
2130	4822 124 22652	2.2μF 20% 50V
2131	4822 124 22652	2.2μF 20% 50V
2132	4822 126 13692	47pF 1% 63V
2133	4822 126 13692	47pF 1% 63V
2134	4822 124 40248	10μF 20% 63V
2135	4822 124 40248	10μF 20% 63V
2136	5322 122 32268	470pF 10% 50V
2137	4822 124 81151	22μF 50V
2138	5322 122 31647	1nF 10% 63V
2139	5322 122 32268	470pF 10% 50V
2141	4822 126 13482	470nF 80/20% 16V
2142	4822 124 81151	22μF 50V
2143	4822 122 32535	680pF 10% 63V
2144	4822 126 13695	82pF 1% 63V
2147	5322 122 32654	22nF 10% 63V
2150	4822 126 13473	220nF 80-20% 50V
2151	4822 126 13692	47pF 1% 63V
2152	4822 126 13692	47pF 1% 63V
2153	4822 126 14585	100nF 10% 50V
2154	4822 126 14585	100nF 10% 50V
2155	4822 126 14585	100nF 10% 50V
2156	4822 124 40196	220μF 20% 16V
2157	4822 124 40196	220μF 20% 16V
2158	4822 124 40207	100μF 20% 25V
2162	5322 122 32654	22nF 10% 63V
2163	4822 126 13473	220nF 80-20% 50V
2164	4822 126 14585	100nF 10% 50V
2165	4822 126 14585	100nF 10% 50V
2166	5322 122 32654	22nF 10% 63V
2167	5322 122 32448	10pF 5% 63V
2168	4822 126 13482	470nF 80/20% 16V
2169	4822 122 32535	680pF 10% 63V
2170	4822 122 32535	680pF 10% 63V
2173	4822 122 33177	10nF 20% 50V
2174	4822 126 13473	220nF 80-20% 50V
2175	4822 122 33575	220pF 5% 63V
2176	4822 122 33575	220pF 5% 63V
2178	5322 122 32654	22nF 10% 63V
2179	5322 122 32654	22nF 10% 63V
2180	5322 122 32654	22nF 10% 63V
2181	4822 126 13692	47pF 1% 63V
2182	4822 126 13692	47pF 1% 63V
2183	5322 122 32654	22nF 10% 63V
2185	4822 126 13692	47pF 1% 63V
2186	4822 126 13473	220nF 80-20% 50V
2188	4822 126 13692	47pF 1% 63V
2189	5322 122 31863	330pF 5% 63V

3100	4822 117 10837	100k 1% 0.1W
3101	4822 117 10837	100k 1% 0.1W
3102	4822 051 20392	3k9 5% 0.1W
3103	4822 051 20392	3k9 5% 0.1W
3104	4822 050 21303	13k 1% 0.6W
3105	4822 050 21303	13k 1% 0.6W
3106	4822 050 21303	13k 1% 0.6W
3107	4822 050 21303	13k 1% 0.6W
3108	4822 050 26492	6k49 1% 0.6W
3109	4822 050 26492	6k49 1% 0.6W
3110	4822 051 20184	180k 5% 0.1W
3111	4822 051 20184	180k 5% 0.1W
3112	4822 051 20223	22k 5% 0.1W
3113	4822 051 20223	22k 5% 0.1W
3114	4822 050 23303	33k 1% 0.6W
3115	4822 051 20333	33k 5% 0.1W
3116	4822 051 20333	33k 5% 0.1W
3117	4822 051 20333	33k 5% 0.1W
3118	4822 051 20273	27k 5% 0.1W
3119	4822 051 20273	27k 5% 0.1W
3120	4822 051 20273	27k 5% 0.1W
3121	4822 051 20273	27k 5% 0.1W
3122	4822 117 10834	47k 1% 0.1W
3123	4822 117 10834	47k 1% 0.1W
3124	4822 116 83933	15k 1% 0.1W
3125	4822 116 83933	15k 1% 0.1W
3126	4822 051 10102	1k 2% 0.25W
3127	4822 051 10102	1k 2% 0.25W
3128	4822 051 20332	3k3 5% 0.1W
3129	4822 051 20332	3k3 5% 0.1W
3130	4822 117 10833	10k 1% 0.1W
3131	4822 117 10833	10k 1% 0.1W
3132	4822 051 20683	68k 5% 0.1W
3133	4822 051 20683	68k 5% 0.1W
3134	4822 117 10965	18k 1% 0.1W
3135	4822 117 10965	18k 1% 0.1W
3136	4822 117 10965	18k 1% 0.1W
3137	4822 117 10965	18k 1% 0.1W
3138	4822 117 11507	6k8 1% 0.1W
3139	4822 117 11507	6k8 1% 0.1W
3140	4822 051 10102	1k 2% 0.25W
3141	4822 051 10102	1k 2% 0.25W
3142	4822 051 20474	470k 5% 0.1W
3143	4822 117 10837	100k 1% 0.1W
3144	4822 051 20333	33k 5% 0.1W
3145	4822 116 83933	15k 1% 0.1W
3150	4822 051 20333	33k 5% 0.1W
3151	4822 116 83933	15k 1% 0.1W
3152	4822 116 83933	15k 1% 0.1W
3153	4822 051 20333	33k 5% 0.1W
3154	4822 051 20822	8k2 5% 0.1W
3155	4822 051 20392	3k9 5% 0.1W
3156	4822 051 20822	8k2 5% 0.1W
3157	4822 100 11676	10k 30% 0.2W
3158	4822 051 20471	470Ω 5% 0.1W
3159	4822 051 20471	470Ω 5% 0.1W
3160	4822 116 52175	100Ω 5% 0.5W
3161	4822 116 52175	100Ω 5% 0.5W
3162	4822 051 20008	jumper 0805
3165	4822 051 20008	jumper 0805
3168	4822 051 20332	3k3 5% 0.1W
3169	4822 117 10834	47k 1% 0.1W
3170	4822 051 20472	4k7 5% 0.1W
3171	4822 051 20391	390Ω 5% 0.1W
3172	4822 051 10102	1k 2% 0.25W
3175	4822 117 10837	100k 1% 0.1W
3176	4822 051 10102	1k 2% 0.25W
3177	4822 051 20223	22k 5% 0.1W
3180	4822 117 13579	220k 1% 0.1W
3181	4822 117 13579	220k 1% 0.1W
3182	4822 051 20474	470k 5% 0.1W
3184	4822 051 10102	1k 2% 0.25W
3185	4822 117 10833	10k 1% 0.1W
3188	4822 051 20472	4k7 5% 0.1W
3189	4822 117 10837	100k 1% 0.1W
3190	4822 051 20472	4k7 5% 0.1W
3191	4822 051 20223	22k 5% 0.1W
3193	4822 117 10834	47k 1% 0.1W
3194	4822 051 20008	Jumper 0805
3196	4822 051 20472	4k7 5% 0.1W
3197	4822 051 20472	4k7 5% 0.1W
3198	4822 051 20008	
3199	4822 051 20561	560Ω 5% 0.1W
3199	4822 051 20562	5k6 5% 0.1W
3200	4822 051 20472	4k7 5% 0.1W
3201	4822 051 20471	470Ω 5% 0.1W
3202	4822 051 20471	470Ω 5% 0.1W
3203	4822 051 10102	1k 2% 0.25W
3204	4822 051 10102	1k 2% 0.25W
3205	4822 051 10102	1k 2% 0.25W
3206	4822 051 20471	470Ω 5% 0.1W
3207	4822 117 10833	10k 1% 0.1W
4xxx	4822 051 10008	jumper 1206
4xxx	4822 051 20008	jumper 0805

5101	2422 543 01048	Crystal 12.8MHz
5102	2422 535 94915	33nH 5%
5105	2422 535 94828	27nH 5%
5107	4822 157 71206	Bead 100MHz 600Ω

6101	4822 130 34121	BAX18
6102	4822 130 61219	BZX79-B10
6106	4822 130 11423	PLVA2656A
6107	4822 130 83757	BAS216

7101	9322 137 78682	NJM2060D
7102	9338 436 90602	SA572N
7103	4822 209 70157	NJM4560DD
7105	3104 218 80310	μP S83C751-4N24
7106	4822 209 17338	L78L08ACZ
7108	4822 130 60373	BC856B
7109	4822 209 83357	NJM4560M
7110	4822 130 60511	BC847B
7112	9337 140 10653	74HC4060D
7113	4822 209 60792	74HC4053D
7114	4822 130 60511	BC847B
7115	4822 209 83357	NJM4560M
7116	4822 130 60511	BC847B
7117	4822 130 60373	BC856B
7118	4822 130 60511	BC847B
7119	4822 130 60511	BC847B

Wireless Receiver [U]

Various

0438	3104 217 06200	Receiver panel 433MHz
0438	3104 217 06050	Receiver panel 864MHz
1701	4822 277 11671	Slide switch 1P 7pos

2701	5322 122 32654	22nF 10% 63V
2702	5322 122 32654	22nF 10% 63V
2703	4822 126 13751	47nF 10% 63V
2704	4822 126 13473	220nF 80-20% 50V
2705	4822 126 14585	100nF 10% 50V
2706	5322 122 32654	22nF 10% 63V
2707	4822 126 14585	100nF 10% 50V
2708	4822 124 40769	4.7µF 20% 100V
2709	5322 122 32531	100pF 5% 50V
2710	4822 126 13473	220nF 80-20% 50V
2711	4822 121 41854	150nF 5% 63V
2712	4822 126 13188	15nF 5% 63V
2713	2222 464 90014	180pF 2% 630V
2714	4822 124 41751	47µF 20% 50V
2715	4822 124 40769	4.7µF 20% 100V
2716	4822 126 13473	220nF 80-20% 50V
2717	5322 122 32654	22nF 10% 63V
2718	4822 126 13473	220nF 80-20% 50V
2719	4822 122 33216	270pF 5% 50V
2720	4822 122 33216	270pF 5% 50V
2721	4822 126 13473	220nF 80-20% 50V
2722	4822 126 14585	100nF 10% 50V
2723	4822 124 22652	2.2µF 20% 50V
2731	4822 124 22652	2.2µF 20% 50V
2741	4822 124 22652	2.2µF 20% 50V
2750	4822 126 13473	220nF 80-20% 50V
2751	5322 122 32531	100pF 5% 50V
2752	4822 126 13473	220nF 80-20% 50V
2753	5322 122 32654	22nF 10% 63V
2754	4822 124 40769	4.7µF 20% 100V
2755	5322 122 32654	22nF 10% 63V
2762	4822 126 13692	47pF 1% 63V
2770	4822 124 40769	4.7µF 20% 100V
2771	5322 122 32654	22nF 10% 63V
2772	4822 124 22652	2.2µF 20% 50V
2773	4822 124 22652	2.2µF 20% 50V
2774	4822 121 51319	1µF 10% 63V
2775	5322 122 32654	22nF 10% 63V
2776	4822 124 22652	2.2µF 20% 50V
2777	4822 124 22652	2.2µF 20% 50V
2778	4822 121 51319	1µF 10% 63V
2779	5322 122 32654	22nF 10% 63V
2780	4822 124 40248	10µF 20% 63V
2781	4822 124 40769	4.7µF 20% 100V
2782	5322 126 10223	4.7nF 10% 63V
2783	4822 124 22652	2.2µF 20% 50V
2786	4822 124 40248	10µF 20% 63V
2787	4822 124 40769	4.7µF 20% 100V
2788	5322 126 10223	4.7nF 10% 63V
2789	4822 124 22652	2.2µF 20% 50V
2790	4822 126 14585	100nF 10% 50V
2792	4822 122 33575	220pF 5% 63V
2793	4822 122 33575	220pF 5% 63V
2794	4822 122 33575	220pF 5% 63V

3701	4822 051 20471	470Ω 5% 0.1W
3702	4822 117 13577	330Ω 1% 1.25W
3703	4822 117 11449	2k2 1% 0.1W
3704	4822 051 20471	470Ω 5% 0.1W
3705	4822 051 20101	100Ω 5% 0.1W
3706	4822 051 20332	3k3 5% 0.1W
3707	4822 117 13577	330Ω 1% 1.25W
3708	4822 051 20478	4Ω7 5% 0.1W
3709	4822 117 11448	180Ω 1% 0.1W
3710	4822 051 20391	390Ω 5% 0.1W
3711	4822 100 12159	100k 30%
3712	4822 117 10833	10k 1% 0.1W
3713	4822 117 10833	10k 1% 0.1W
3714	4822 051 20223	22k 5% 0.1W
3715	4822 117 11148	56k 1% 0.1W
3716	4822 051 20332	3k3 5% 0.1W
3717	4822 116 52264	27k 5% 0.5W
3718	4822 116 52264	27k 5% 0.5W
3719	4822 117 10837	100k 1% 0.1W
3720	4822 117 10837	100k 1% 0.1W
3721	4822 051 20273	27k 5% 0.1W
3722	4822 051 20472	4k7 5% 0.1W
3723	4822 051 20273	27k 5% 0.1W
3723	4822 117 10965	18k 1% 0.1W
3724	4822 051 20393	39k 5% 0.1W
3724	4822 117 10837	100k 1% 0.1W
3726	4822 117 11449	2k2 1% 0.1W
3727	4822 051 20562	5k6 5% 0.1W
3728	4822 051 20562	5k6 5% 0.1W
3729	4822 051 20474	470k 5% 0.1W
3730	4822 051 20223	22k 5% 0.1W
3731	4822 051 20683	68k 5% 0.1W
3732	4822 051 20562	5k6 5% 0.1W
3733	4822 051 20392	3k9 5% 0.1W
3734	4822 051 20561	560Ω 5% 0.1W
3735	4822 051 20391	390Ω 5% 0.1W
3736	2120 363 90145	22K 30%
3737	4822 051 20472	4k7 5% 0.1W
3738	4822 051 20472	4k7 5% 0.1W
3739	4822 117 11449	2k2 1% 0.1W
3740	4822 051 20223	22k 5% 0.1W
3741	4822 117 11449	2k2 1% 0.1W
3742	4822 051 20562	5k6 5% 0.1W
3743	4822 051 20392	3k9 5% 0.1W
3744	4822 051 20561	560Ω 5% 0.1W
3745	4822 051 20391	390Ω 5% 0.1W
3746	4822 051 20472	4k7 5% 0.1W
3747	4822 051 20101	100Ω 5% 0.1W
3748	4822 117 11449	2k2 1% 0.1W
3749	4822 117 11449	2k2 1% 0.1W
3750	4822 051 10102	1k 2% 0.25W
3751	4822 051 20472	4k7 5% 0.1W
3752	4822 051 20101	100Ω 5% 0.1W
3753	4822 117 10833	10k 1% 0.1W
3754	4822 117 10837	100k 1% 0.1W
3755	4822 117 10833	10k 1% 0.1W
3756	4822 117 10833	10k 1% 0.1W
3757	4822 117 10833	10k 1% 0.1W
3758	4822 117 10834	47k 1% 0.1W
3759	4822 117 10834	47k 1% 0.1W
3760	4822 051 20472	4k7 5% 0.1W
3761	4822 051 20101	100Ω 5% 0.1W
3762	4822 117 10833	10k 1% 0.1W
3763	4822 117 10833	10k 1% 0.1W
3771	4822 117 10833	10k 1% 0.1W
3772	4822 051 20332	3k3 5% 0.1W
3775	4822 117 10833	10k 1% 0.1W
3776	4822 051 20332	3k3 5% 0.1W
3778	4822 051 10102	1k 2% 0.25W
3779	4822 051 10102	1k 2% 0.25W
3780	4822 117 10837	100k 1% 0.1W
3781	4822 117 10965	18k 1% 0.1W
3782	4822 117 10834	47k 1% 0.1W
3783	4822 117 11449	2k2 1% 0.1W
3786	4822 117 10837	100k 1% 0.1W
3787	4822 117 10965	18k 1% 0.1W
3788	4822 117 10834	47k 1% 0.1W
3789	4822 117 11449	2k2 1% 0.1W
3792	4822 117 10837	100k 1% 0.1W
3793	4822 117 10837	100k 1% 0.1W
3794	4822 051 20472	4k7 5% 0.1W
3795	4822 117 10833	10k 1% 0.1W
3796	4822 051 20561	560Ω 5% 0.1W
3796	4822 051 20562	5k6 5% 0.1W
42xx	4822 051 10008	Jumper 1206
43xx	4822 051 20008	Jumper 0805

5701	2422 549 43868	Coil var. 10.7MHz
5702	4822 157 11668	Filter MPX 20KHZ
5703	4822 157 11668	Filter MPX 20KHZ
5704	4822 242 72527	Crystal 4 MHz
5705	4822 157 71206	Bead 100MHz 600Ω
5706	4822 242 70665	Filter 10.7M
5707	4822 242 70665	Filter 10.7M
5708	4822 157 11172	68nH 10%

6701	5322 130 34331	BAV70
6702	4822 130 34233	BZX79-B5V1
6703	4822 130 83757	BAS216
6704	4822 130 30621	1N4148
6705	4822 130 30621	1N4148

7702	9350 394 00112	TDA1578A/V6
7703	4822 130 60373	BC856B
7704	4822 130 60511	BC847B
7705	4822 130 60511	BC847B
7706	4822 130 60511	BC847B
7707	5322 130 42718	BFS20
7708	3104 218 80290	µProcessor
7709	9338 436 90602	SA572N
7710	4822 209 70157	NJM4560DD
7711	4822 209 17338	L78L08ACZ
7712	4822 130 41327	BC327-40
7713	4822 130 60511	BC847B
7714	4822 209 15263	L78L06ACZ
7717	4822 130 60511	BC847B
7718	4822 130 60373	BC856B
7719	4822 130 60511	BC847B
7720	4822 130 60511	BC847B

Surround Sound Supply + Amplifier [W1] [W2] [W3] [W4]

Various

0440	4303 308 35230	Amplifier board
0011	4303 308 76220	Led holder LU53-080
0012	9390 288 60112	Spring
0013	3104 214 34571	Power button
1101	4822 267 10748	3P Male
1201	2422 025 14044	3P Male
1202	4822 265 30734	4P
1203	4303 308 99380	2P
1204	3143 008 90671	Mains switch
1205	4822 265 11253	Fuse holder
1206	4822 070 32002	Fuse 2A
1301	2422 025 04849	2P Male
1302	4822 265 10872	2P Male
1303	4822 265 30735	5P Male
1304	4822 267 10735	3P Male
1305	4822 265 41392	7P Male
1306	4822 267 31014	Headphone socket
1307	4303 308 94460	Slide switch 2P
1401	4822 265 30735	5P Male
1402	4822 267 10735	3P Male
1403	2422 025 04851	3P Male
1404	4822 267 10565	4P Male
1405	2422 025 10647	1P Male
1406	2422 025 04849	2P Male
1407	2422 025 04849	2P Male
1408	4822 071 52502	Fuse 2.5A
1409	4822 071 52502	Fuse 2.5A
8000	3139 110 30840	Cable 180mm/description>
8002	4303 301 91570	Cable 7P shielded
8003	4303 301 91580	Cable 3P shielded
8004	4303 301 00380	Cable 2P shielded
8005	3139 110 30730	Cable 3P shielded

2201	4822 126 13838	100nF 80-20% 50V
2202	4822 126 11958	2,2nF 10% 500V
2203	4822 126 13841	1nF 20% 250V
2204	4822 122 33127	2,2nF 10% 63V
2205	5322 121 42498	680nF 5% 63V
2206	3143 018 90900	100pF 10% 1kV
2207	2222 044 36478	4,7µF 20% 400V
2208	2222 336 20105	1µF 20 275V
2209	4822 124 12056	1000µF 20% 35V
2210	4822 124 40196	220µF 20% 16V
2211	4822 126 13838	100nF 80-20% 50V
2301	4822 126 14043	1µF +80-20% 16V
2302	4822 126 14043	1µF +80-20% 16V
2303	4822 126 13751	47nF 10% 63V
2304	4822 126 13751	47nF 10% 63V
2401	4822 124 12056	1000µF 20% 35V
2402	4822 124 11912	220µF 20% 6,3V
2403	4822 124 11912	220µF 20% 6,3V
2404	4822 124 42367	3300µF 20% 35V
2405	4822 124 42367	3300µF 20% 35V
2406	4822 124 40769	4,7µF 20% 100V
2407	4822 124 40207	100µF 20% 25V
2408	4822 124 81151	22µF 50V
2409	4822 122 31947	100nF 20% 63V
2410	4822 122 31947	100nF 20% 63V
2411	4822 122 31947	100nF 20% 63V
2412	4822 122 31947	100nF 20% 63V
2413	4822 122 31947	100nF 20% 63V
2414	4822 122 31947	100nF 20% 63V
2415	4822 126 13473	220nF 80-20% 50V
2416	4822 126 13473	220nF 80-20% 50V
2420	5322 122 32268	470pF 10% 50V
2421	4822 126 13473	220nF 80-20% 50V
2422	4822 126 13473	220nF 80-20% 50V
2426	5322 122 32268	470PF 10% 50V
2427	4822 126 13473	220nF 80-20% 50V
2428	4822 126 13473	220nF 80-20% 50V
2429	5322 122 32531	100pF 5% 50V
2430	5322 122 32531	100pF 5% 50V
2431	4822 126 13473	220nF 80-20% 50V
2432	4822 126 13473	220nF 80-20% 50V

2433	5322 122 32654	22nF 10% 63V
2434	5322 122 32654	22nF 10% 63V
2435	5322 122 32531	100pF 5% 50V
2436	5322 122 32531	100pF 5% 50V
2437	4822 126 13838	100nF 80-20% 50V
2438	4822 126 13838	100nF 80-20% 50V
2439	4822 126 13838	100nF 80-20% 50V
2440	4822 126 13838	100nF 80-20% 50V
2441	4822 126 14043	1µF +80-20% 16V
2442	4822 126 13473	220nF 80-20% 50V
2443	4822 126 13482	470nF 80/20% 16V
2444	4822 126 13691	27pF 1% 63V
2445	4822 126 13691	27pF 1% 63V
2446	4822 126 13473	220nF 80-20% 50V
2447	4822 126 13838	100nF 80-20% 50V
2448	4822 126 13838	100nF 80-20% 50V
2449	4822 126 13838	100nF 80-20% 50V
2450	4822 126 13838	100nF 80-20% 50V
2451	4822 126 13473	220nF 80-20% 50V
2452	5322 122 32531	100pF 5% 50V
2453	5322 122 32531	100pF 5% 50V
2454	5322 122 32531	100pF 5% 50V
2455	5322 122 32531	100pF 5% 50V
2456	4822 122 33127	2,2nF 10% 63V

3201	4822 051 52702	2k7 1% 0,125W
3202	4822 053 21475	4M7 5% 0,5W
3203	4822 053 21225	2M2 5% 0,5W
3204	4822 051 52702	2k7 1% 0,125W
3205	4822 051 20121	120Ω 5% 0,1W
3206	4822 117 11454	820Ω 1% 0,1W
3207	4822 053 20106	10M 5% 0,25W
3208	4822 116 83883	470Ω 5% 0,5W
3209	4822 117 11449	2k2 1% 0,1W
3210	4822 117 11449	2k2 1% 0,1W
3211	4822 117 10833	10k 1% 0,1W
3212	4822 051 10472	4k7 2% 0,25W
3214	4822 117 10833	10k 1% 0,1W
3215	4822 116 52195	47Ω 5% 0,5W
3216	4822 116 52182	15Ω 5% 0,5W
3217	4822 116 52182	15Ω 5% 0,5W
3219	4822 052 10108	1Ω 5% 0,33W
3220	4822 052 10108	1Ω 5% 0,33W
3221	4822 052 10109	10Ω 5% 0,33W
3222	4822 052 10471	470Ω 5% 0,33W
3223	4822 051 20471	470Ω 5% 0,1W
3301	4822 116 83933	15k 1% 0,1W
3302	4822 116 83933	15k 1% 0,1W
3303	4822 117 11149	82k 1% 0,1W
3304	4822 117 11149	82k 1% 0,1W
3305	4822 051 20008	Jumper 0805
3306	4822 051 20008	Jumper 0805
3307	4822 051 20223	22k 5% 0,1W
3308	4822 051 20223	22k 5% 0,1W
3401	4822 050 23301	330Ω 1% 0,6W
3402	4822 050 23301	330Ω 1% 0,6W
3403	4822 050 23301	330Ω 1% 0,6W
3404	4822 050 23301	330Ω 1% 0,6W
3405	4822 117 11507	6k8 1% 0,1W
3406	4822 051 20822	8k2 5% 0,1W
3407	4822 051 20472	4k7 5% 0,1W
3409	4822 051 20008	Jmper 0805
3410	4822 117 10833	10k 1% 0,1W
3411	4822 117 11507	6k8 1% 0,1W
3412	4822 051 20822	8k2 5% 0,1W
3413	4822 051 20472	4k7 5% 0,1W
3415	4822 051 20008	Jumper 0805
3416	4822 117 10833	10k 1% 0,1W
3419	4822 116 83961	6k8 5%
3420	4822 117 10834	47k 1% 0,1W
3421	4822 117 10834	47k 1% 0,1W
3422	4822 051 20472	4k7 5% 0,1W
3423	4822 117 10834	47k 1% 0,1W
3424	4822 117 13579	220k 1% 0.1W
3425	4822 050 21003	10k 1% 0,6W
3426	4822 051 20334	330k 5% 0,1W
3427	4822 117 10837	100k 1% 0.1W
3428	4822 117 10837	100k 1% 0.1W
3429	4822 117 10833	10k 1% 0,1W
3430	4822 117 10833	10k 1% 0,1W
3431	4822 117 10833	10k 1% 0,1W
3432	4822 051 20335	3M3 5% 0,1W
3433	4822 051 20474	470k 5% 0,1W
3434	4822 117 11149	82k 1% 0,1W
3435	4822 051 20474	470k 5% 0,1W
3436	4822 051 20223	22k 5% 0,1W
3437	4822 051 20472	4k7 5% 0,1W
3438	4822 117 10833	10k 1% 0,1W
3439	4822 116 52195	47Ω 5% 0,5W
3440	4822 117 10834	47k 1% 0,1W
3441	4822 117 10834	47k 1% 0,1W
3442	4822 117 11449	2k2 1% 0,1W
3443	4822 051 20472	4k7 5% 0,1W
3444	4822 051 20562	5k6 5% 0,1W
3445	4822 117 10833	10k 1% 0,1W
3446	4822 117 10833	10k 1% 0,1W
3447	4822 117 10833	10k 1% 0,1W
3448	4822 117 10837	100k 1% 0.1W
3449	4822 117 10833	10k 1% 0,1W
3450	4822 117 11449	2k2 1% 0,1W
3452	4822 052 10828	8.2Ω 5% 0,33W
3453	4822 052 10828	8.2Ω 5% 0,33W
3458	4822 051 20472	4k7 5% 0,1W
3459	4822 051 20472	4k7 5% 0,1W
3460	4822 117 10833	10k 1% 0,1W
3461	4822 051 20102	1k 5% 0,1W
3462	4822 051 20102	1k 5% 0,1W
42xx	4822 051 10008	Jumper 1206
43xx	4822 051 20008	Jumper 0805
44xx	4822 051 20008	Jumper 1206 (except see next line)
4408	4822 051 20008	Jumper 0805
4409	4822 051 20008	Jumper 0805

5201	4303 308 75810	Coil
5202	2422 535 97353	680µH 10%
5203	2422 535 97353	680µH 10%
5204	3128 138 38610	Standby transformer
5205	4822 157 70436	8,2µH
5206	4303 308 75820	Relay DC 12V

6501	9337 175 71682	TLSV5100
6201	4822 130 31878	1N4003G
6202	5322 130 31938	BYV27-200
6203	4822 130 83338	LL4148
6204	4822 130 83338	LL4148
6205	4822 130 83338	LL4148
6206	4822 130 83147	DF06M
6207	9338 872 80673	BZX55-F22
6208	4822 130 34281	BZX79-B15
6209	4822 130 30842	BAV21
6210	4822 130 83338	LL4148
6211	4822 130 11421	BT151X-500R
6212	9339 530 90685	TZM-C20
6401	4822 130 30862	BZX79-B9V1
6402	4822 130 30862	BZX79-B9V1
6403	4822 130 34278	BZX79-B6V8
6404	4822 130 34173	BZX79-B5V6
6405	4822 130 31878	1N4003G
6406	4822 130 31878	1N4003G
6407	4822 130 31878	1N4003G
6408	4822 130 31878	1N4003G
6409	4822 130 31878	1N4003G
6410	4822 130 31878	1N4003G
6411	4822 130 31878	1N4003G
6412	4822 130 31878	1N4003G
6413	4822 130 31878	1N4003G
6414	4822 130 31878	1N4003G
6415	4822 130 31878	1N4003G
6416	4822 130 31878	1N4003G
6417	4822 130 31878	1N4003G
6418	4822 130 31878	1N4003G
6421	4822 130 83338	LL4148
6422	4822 130 83338	LL4148
6423	4822 130 83338	LL4148
6424	4822 130 83338	LL4148
6425	4822 130 83338	LL4148
6426	4822 130 83338	LL4148
6427	4822 130 83338	LL4148
6428	4822 130 30621	1N4148
6429	4822 130 83338	LL4148
6430	4822 130 83338	LL4148
6431	4822 130 83338	LL4148
6432	4822 130 83338	LL4148
6433	4822 130 83338	LL4148
6434	4822 130 31878	1N4003G
6436	4822 130 31878	1N4003G
6437	4822 130 30621	1N4148
6501	9337 175 71682	TLSV5100

7201	4822 209 15867	L4940V12
7203	4822 130 11418	TCDT1102G
7204	4822 130 44568	BC557B
7205	4822 130 60511	BC847B
7206	4822 130 44503	BC547C
7207	4822 130 11417	STP3NB60FP
7401	4822 209 32641	TDA2616Q
7402	4822 209 30095	LM833D
7403	4822 209 30095	LM833D
7404	5322 209 82941	LM358D
7405	5322 209 70225	LM393D
7410	4822 130 60373	BC857B
7411	4822 130 60373	BC857B
7412	4822 130 60511	BC847B
7413	4822 130 60511	BC847B
7414	4822 130 40981	BC337-25
7415	4822 130 60511	BC847B
7416	4822 130 60511	BC847B
7417	4822 130 60511	BC847B